ANNOVI REVERBERI
The Power of Experience

VIP 8.130

Version:
Serial number:
Code: **10418**

08/06/2012

230 V - 50 Hz | **schuko**

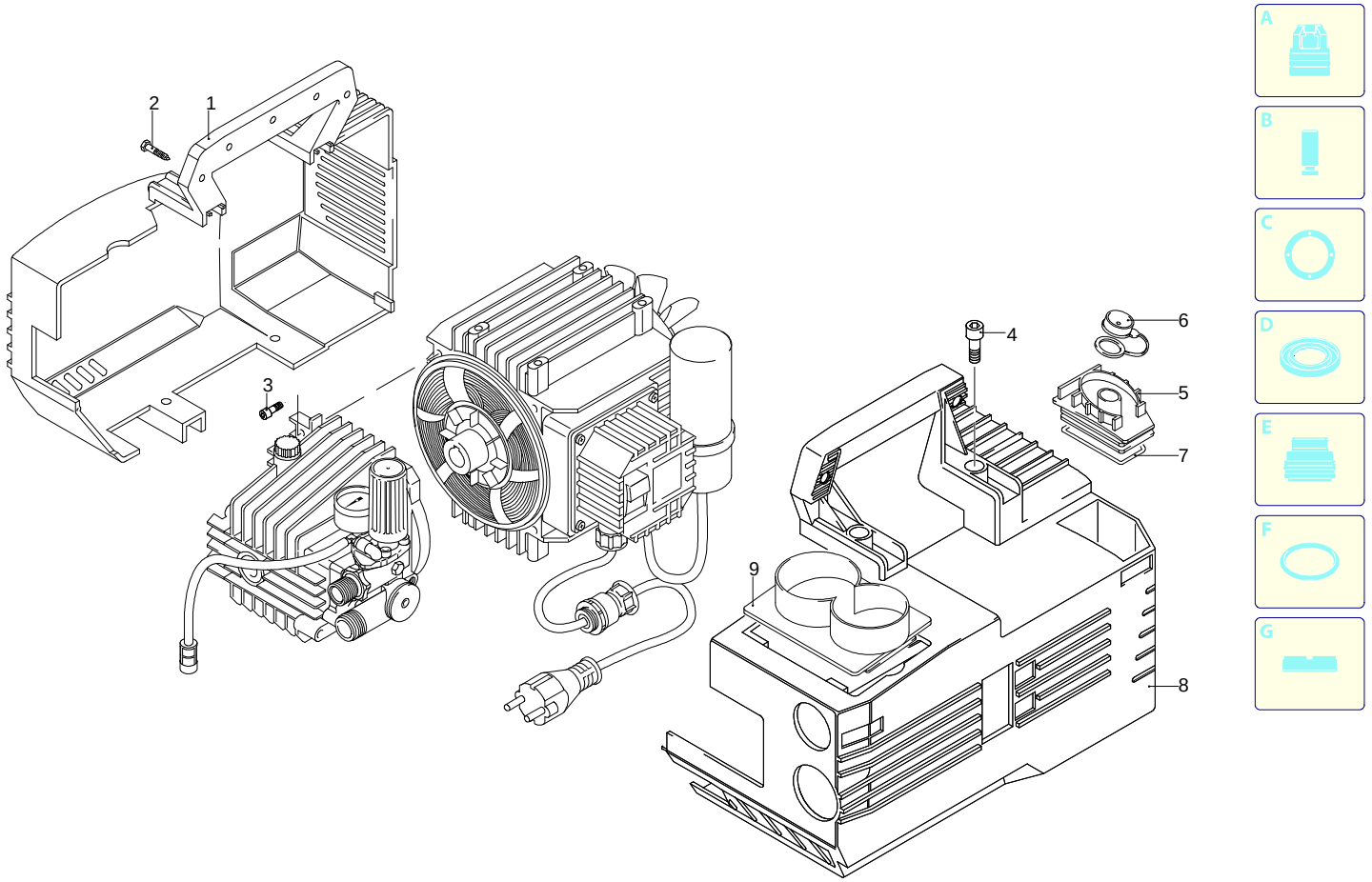

Validity	Pos.	Code	Description	Q
	1	1340700	Black casing	1
	2	1261560	Screw	2
	3	1260780	Screw	4
	4	1200430	Screw	8
	5	1340810	Plug	1
	6	1260351	Plug	1
	7	390210	O-ring	1
	8	1342010	Black casing	1
	9	1342000	Yellow cover	1

UN_CE_0058-BX

ANNOVI REVERBERI
The Power of Experience

VIP 8.130

Version:
Serial number:
Code: **10418**

08/06/2012

230 V - 50 Hz | **schuko**

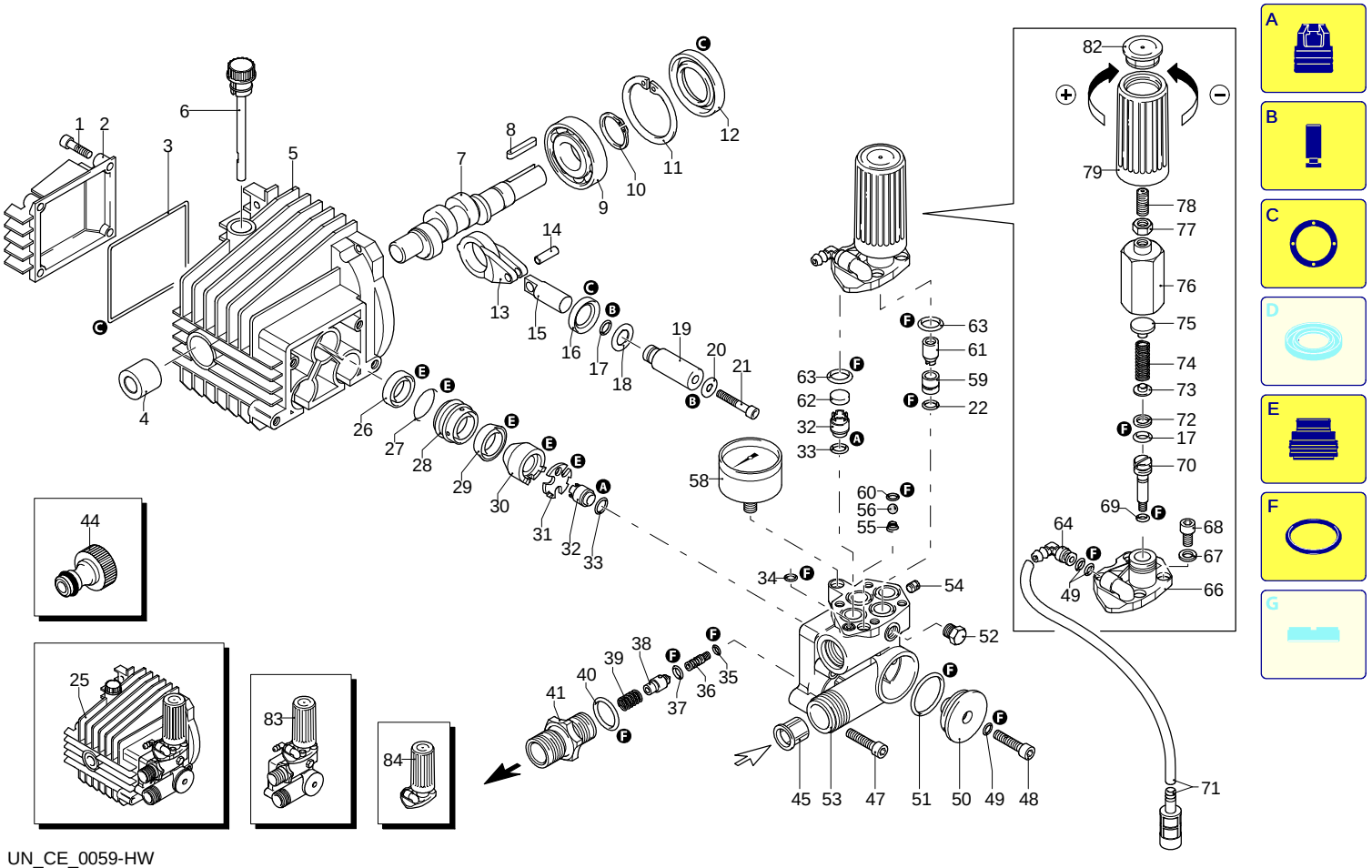

UN_CE_0059-HW

Validity	Pos.	Code	Description	Q
	1	1260780	Screw	4
	2	1344060	Cover	1
	3	1040710	O-ring	1
	4	1260050	Bushing	1
	5	1344050	Pump body	1
	6	1349000	Plug	1
	7	1340170	Shaft	1
	8	880111	Key	1
	9	1341070	Bearing	1
	10	480890	Ring	1
	11	111120	Ring	1
	12	1341080	Ring	1
	13	1340060	Connecting-rod	3
	14	1340080	Pin	3
	15	1340070	Piston	3
	16	1260460	Oil seal	3
	17	600180	O-ring	4
	18	1341010	Plate	3
	19	1342740	Piston	3
	20	1341020	Washer	3
	21	850670	Screw	3
	22	600180	O-ring	1
	25	1349269	Pump assembly	1
	26	1260440	Water seal	3
	27	770260	O-ring	3
	28	1342730	Piston guide	3
	29	1342760	Water seal	3
	30	1342720	Ring	3
	31	1342750	Plate	3
	32	1349053	Valve	6
	33	800560	O-ring	6
	34	390341	O-ring	1
	35	1343110	O-ring	1
	36	1342710	Nozzle	1
	37	1460430	O-ring	1
	38	1460260	Piston	1
	39	1540140	Spring	1
	40	880270	O-ring	1
	41	1342690	Fitting	1
	44	1461470	Fitting	1
	45	1340260	Filter	1
	47	881470	Screw	4
	48	680700	Screw	1
	49	480480	O-ring	3
	50	1340190	Cover	1
	51	780050	O-ring	1
	52	620301	Plug	1
	53	1342670	Head	1
	54	851100	Screw	1
	55	1250270	Spring	1
	56	1250280	Ball	1
	58	40806	Pressure gauge	1
	59	1342700	Seat	1
	60	1460430	O-ring	1
	61	1460150	Piston	1
	62	1343810	Plug	3
	63	740290	O-ring	4
	64	1260670	Fitting	1
	66	1342680	Cover	1
	67	1381550	Washer	4
	68	1343510	Screw	4
	69	1080190	O-ring	1

ANNOVI REVERBERI
The Power of Experience

VIP 8.130

Version:
Serial number:
Code: **10418**

08/06/2012

230 V - 50 Hz | **schuko**

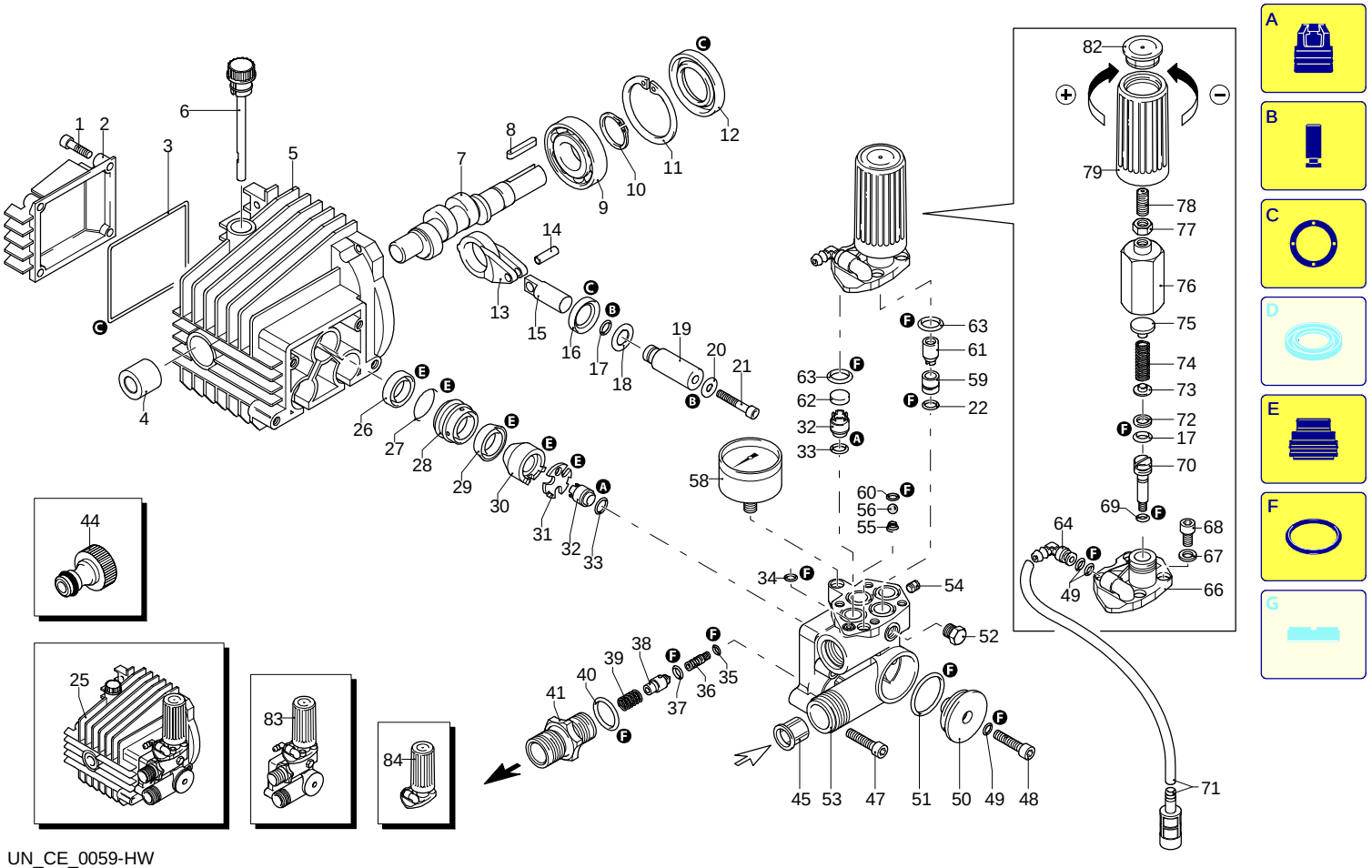

UN_CE_0059-HW

Validity	Pos.	Code	Description	Q
	70	2021900	Piston	1
	71	1269115	Hose assembly	1
	72	1080401	Ring	1
	73	1343450	Wobble plate	1
	74	1460190	Spring	1
	75	1343000	Wobble plate	1
	76	1980640	Insert	1
	77	1060120	Nut	1
	78	392840	Screw	1
	79	1981780	Knob	1
	82	1981770	Plug	1
	83	2693	Head assembly	1
	84	2668	Valve kit adjustment	1
	A	1880	Valve kit	1
	B	2623	Piston kit	1
	C	1876	Oil seal kit	1
	E	2624	Water seal kit	1
	F	2767	Gasket kit	1

ANNOVI REVERBERI
The Power of Experience

VIP 8.130

Version:
Serial number:
Code: **10418**

08/06/2012

230 V - 50 Hz | **schuko**

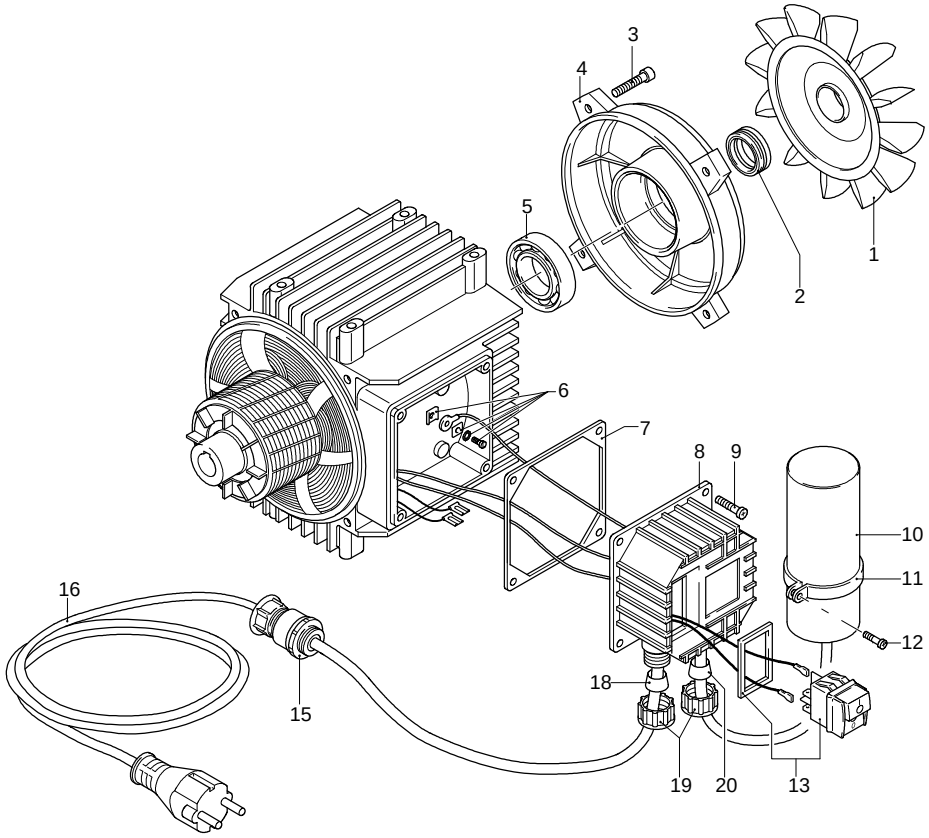

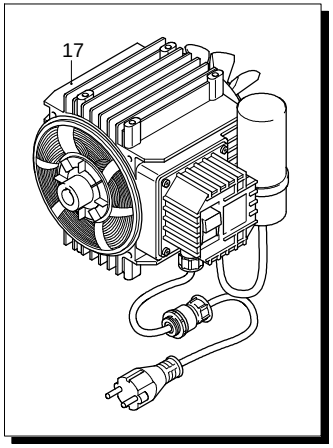

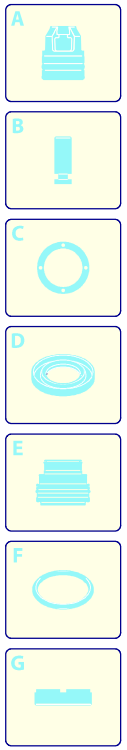

Validity	Pos.	Code	Description	Q
	1	1260300	Fan	1
	2	1340350	Seal	1
	3	1260760	Screw	4
	4	1340320	Shield	1
	5	1340340	Bearing	1
	6	1269100	Clamp	1
	7	1340780	Gasket	1
	8	1340480	Switch	1
	9	1261560	Screw	4
	10	1263510	Capacitor	1
	11	1340280	Clamp	1
	12	1260810	Screw	1
	13	2320280	Switch	1
	15	1262370	Orifice	1
	16	1466460	Cable	1
	17	4811	Motor	1
	18	1340660	Gland	1
	19	1340640	Ring nut	2
	20	1340650	Gland	1

ANNOVI REVERBERI
The Power of Experience

VIP 8.130

Version:
Serial number:
Code: **10418**

08/06/2012

230 V - 50 Hz | **schuko**

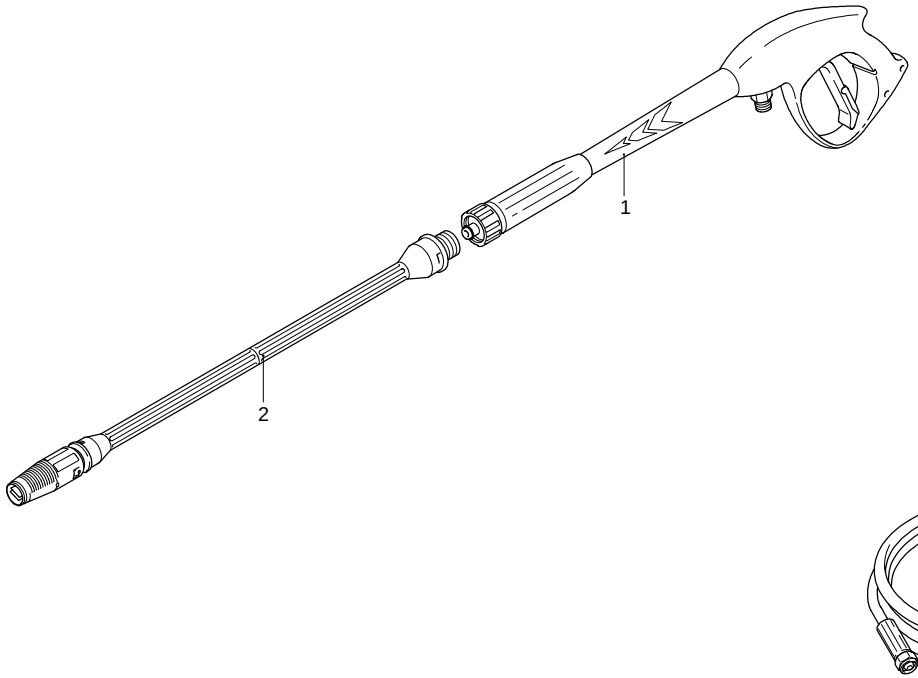

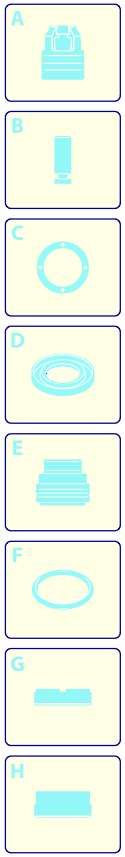

Validity	Pos.	Code	Description	Q
	1	40925	Gun	1
	2	40030	Lance+lance head	1
	3	1460702	High pressure hose	1
	4	2000770	O-ring	1

UN_CE_0061-CR