AVVOLGITUBO Metallico - COD. 41679 - 41680 - 41682 - 41683 - 41684 - 41685

CAR 90
CAR 130

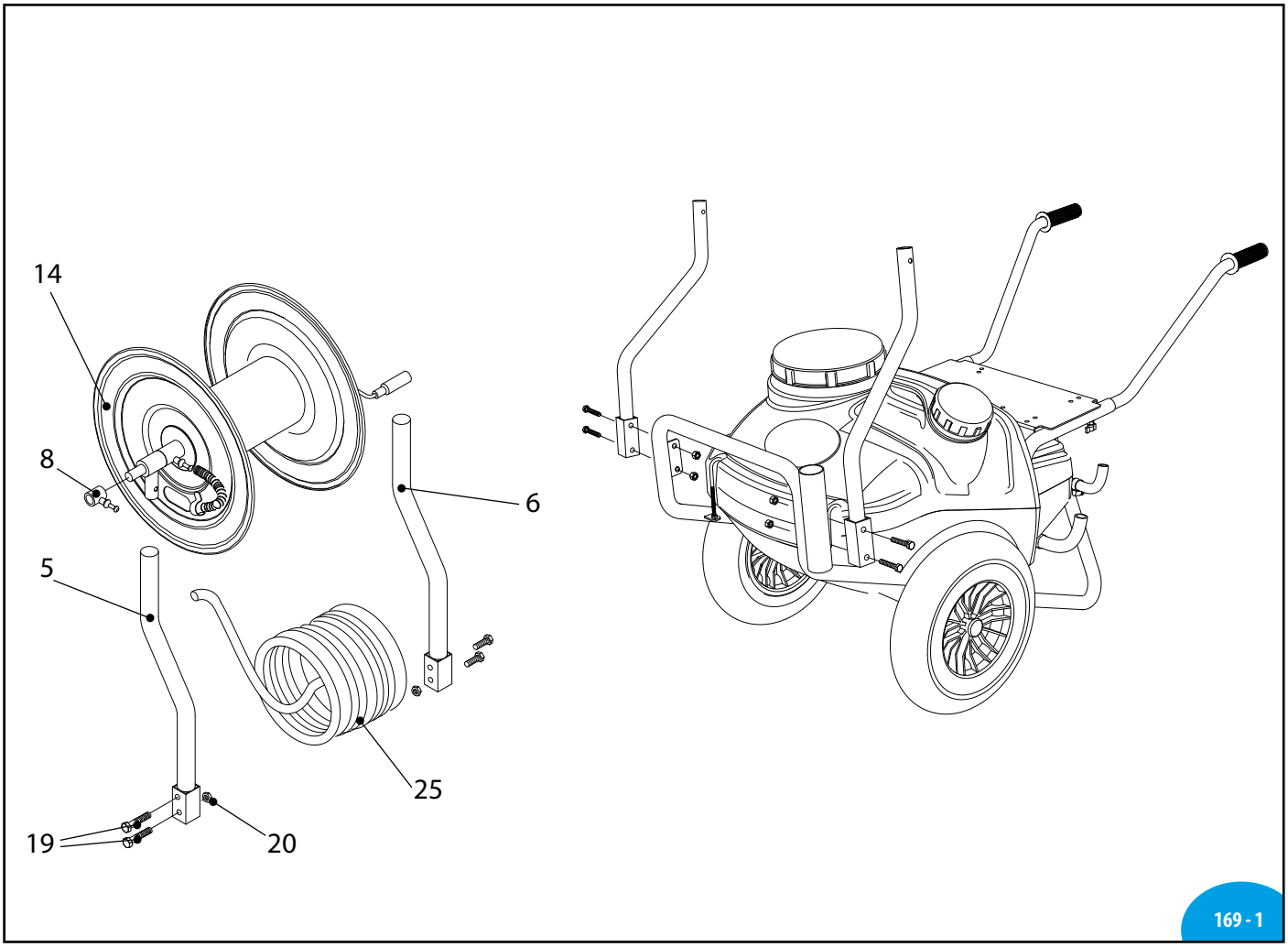

169 - 1

SL000150-BQ

Pos	Cod.	Descrizione		Description	Q.ty	Note
5	2780690	Staffa	sx	Bracket	1	COD. 41680 - 41683 - 41685
	3000370	Staffa	sx	Bracket	1	COD. 41679 - 41682 - 41684
6	2780700	Staffa	dx	Bracket	1	COD. 41680 - 41683 - 41685
	3000380	Staffa	dx	Bracket	1	COD. 41679 - 41682 - 41684
8	51672	Rubinetto		Valve	1	
14	2780710	Tamburo		Hose reel	1	
19	380250	Vite	TE M8x45	Screw	4	
20	380240	Dado	M8	Nut	4	
25	651180	Tubo	Ø 8 - 100 m	Pipe	1	COD. 41682 - 41683
	651150	Tubo	Ø 10 - 100 m	Pipe	1	COD. 41684 - 41685

Tipo Type	AR DUE AR 202 AR 252	AR 30 AR 303 AR 403
Avvolgitubo 100 mt con staffe per CAR90 senza tubo Hose-reel 100 mt with brackets for CAR90 without hose	(41679)	(41679)
Avvolgitubo 100 mt con staffe per CAR130 senza tubo Hose-reel 100 mt with brackets for CAR130 without hose	(41680)	(41680)
Avvolgitubo gomma telata 8x13/100 mt per CAR90 Hose-reel and 100 mt rubber 8x13 diameter hose for CAR90	(41682)	-
Avvolgitubo gomma telata 8x13/100 mt per CAR130 Hose-reel and 100 mt rubber 8x13 diameter hose for CAR130	(41683)	-
Avvolgitubo gomma telata 10x17/100 mt per CAR90 Hose-reel and 100 mt rubber 10x17 diameter hose for CAR90	-	(41684)
Avvolgitubo gomma telata 10x17/100 mt per CAR130 Hose-reel and 100 mt rubber 10x17 diameter hose for CAR130	-	(41685)
Tubo gomma telata L = 100 m Rubber hose L = 100 m	(651180)	(651150)

MI 92889