ANNOVI REVERBERI
The Power of Experience

MODENA 990 TSS

Version:
Serial number:
Code: **14740**

29/08/2018

400 V - 50 Hz

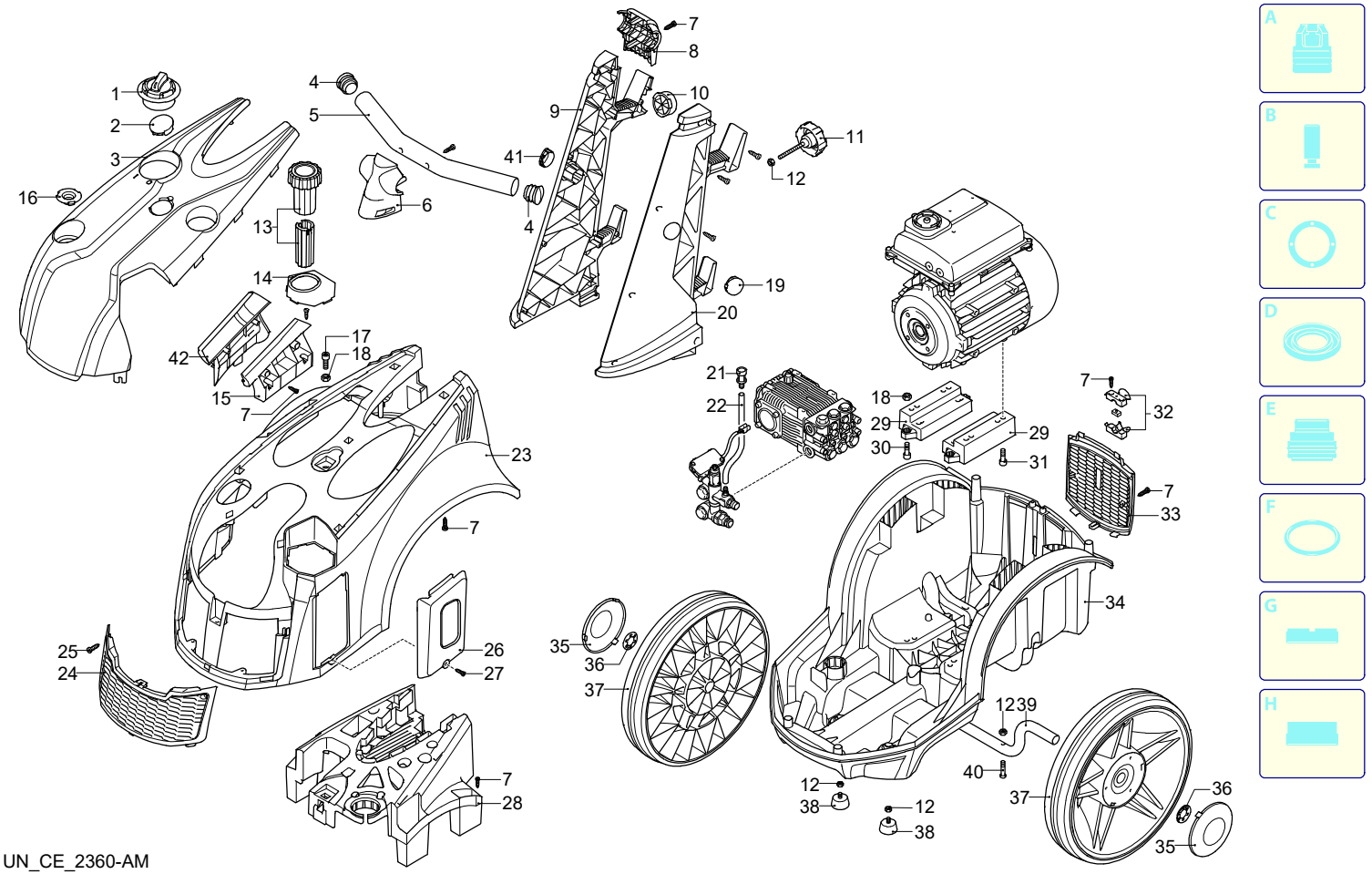

UN_CE_2360-AM

Validity	Pos.	Code	Description	Q
	1	3560510	Knob	1
	2	3560530	Plug	1
	3	3560400	Casing	1
	4	3560500	Plug	2
	5	3560470	Handle	1
	6	3560480	Support	1
	7	2100300	Screw	13
	8	3560490	Support	1
	9	3560300	Handle	1
	10	2500130	Rubber foot	1
	11	3569004	Knob	1
	12	390440	Nut	5
	13	3569000	Knob	1
	14	3560650	Cover	1
	15	3560750	Accessories carrier	1
	16	3560520	Support	1
	17	540290	Screw	1
	18	380240	Nut	5
	19	3560730	Plug	1
	20	3560290	Handle	1
	21	1341030	Filter	1
	22	1266650	Pipe	1
	23	3560280	Casing	1
	24	3560410	Guard	1
	25	2440290	Screw	2
	26	3560640	Casing	1
	27	4240590	Screw	1
	28	3560360	Support	1
	29	3560340	Support	2
	30	180370	Screw	4
	31	850250	Screw	4
	32	3560600	Cable gland	1
	33	3560380	Guard	1
	34	3560270	Base	1
	35	3560330	Cover	2
	36	380620	Washer	2
	37	3560320	Wheel	2
	38	2360780	Vibration damper	2
	39	3560350	Axle	1
	40	3780650	Screw	2
	41	3560740	Plug	1
	42	3560390	Accessories carrier	1

ANNOVI REVERBERI
The Power of Experience

MODENA 990 TSS

Version:
Serial number:
Code: **14740**

29/08/2018

400 V - 50 Hz

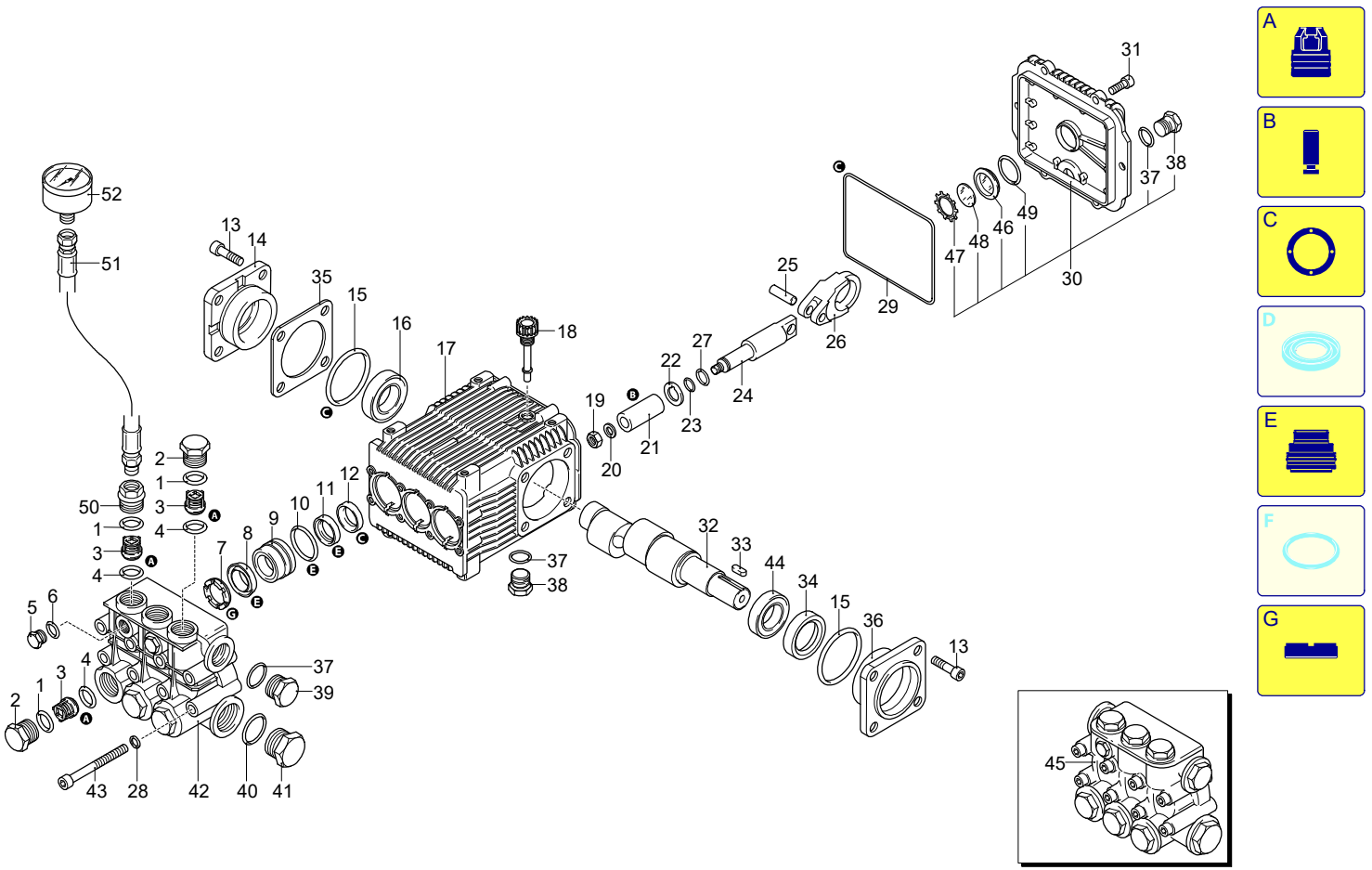

UN_CE_2361-AM

Validity	Pos.	Code	Description	Q
	1	960160	O-ring	6
	2	960090	Plug	5
	3	1389051	Complete valve	6
	4	880830	O-ring	6
	5	880581	Plug	2
	6	820510	O-ring	2
	7	840320	Ring	3
	8	840330	Water seal	3
	9	1380160	Piston guide	3
	10	961240	O-ring	3
	11	840340	Water seal	3
	12	1383130	Ring	3
	13	850370	Screw	8
	14	1380050	Support	1
	15	640030	O-ring	2
	16	2280340	Bearing	1
	17	1382770	Pump body	1
	18	880130	Plug	1
	19	962010	Nut	3
	20	962000	Washer	3
	21	1382360	Piston	3
	22	1380950	Plate	3
	23	600180	O-ring	3
	24	1380920	Piston	3
	25	1380060	Pin	3
	26	1383050	Connecting-rod	3
	27	1080401	Ring	3
	28	1381850	Washer	8
	29	1780510	O-ring	1
	30	1789010	Cover	1
	31	1343510	Screw	6
	32	2280070	Shaft	1
	33	1380520	Key	1
	34	180340	Ring	1
	35	1380120	Shim 0.10 mm	1
	35	1380130	Shim 0.19 mm	1
	36	1380040	Support	1
	37	740290	O-ring	3
	38	1980740	Plug	2
	39	1980740	Plug	1
	40	180101	O-ring	1
	41	820361	Plug	1
	42	1380020	Head	1
	43	820150	Screw	8
	44	1383140	Bearing	1
	45	1389216	Head assembly	1
	46	1260250	Level gauge	1
	47	1260430	Ring	1
	48	1780690	Plate	1
	49	1140450	O-ring	1
	50	961440	Plug	1
	51	3560800	Pipe	1
	52	43792	Pressure gauge	1
	A	2864	Valve kit	1
	B	2759	Piston kit	1
	C	1855	Oil seal kit	1
	E	1888	Water seal kit	1
	G	1816	Support ring kit	1

ANNOVI REVERBERI®
The Power of Experience

MODENA 990 TSS

Version:
Serial number:
Code: **14740**

29/08/2018

400 V - 50 Hz

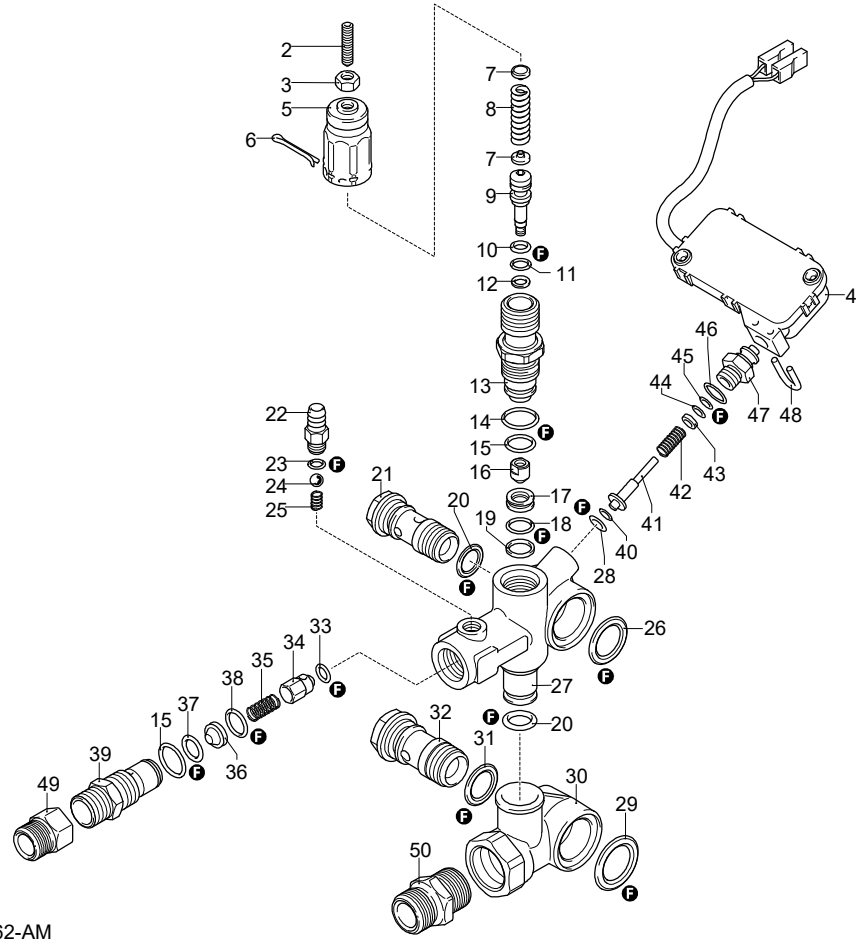

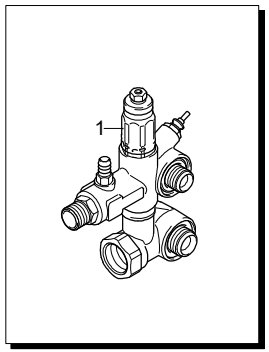

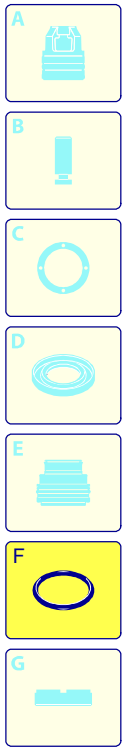

Validity	Pos.	Code	Description	Q
	1	25452	Complete valve	1
	2	2840970	Screw	1
	3	1060120	Nut	1
	4	2029752	TSS box assembly	1
	5	2500540	Insert	1
	6	2500550	Split pin	1
	7	1980220	Wobble plate	2
	8	2760410	Spring	1
	9	2760400	Piston	1
	10	2260100	O-ring	1
	11	660190	O-ring	1
	12	2760210	Ring	1
	13	2760570	Guide	1
	14	1200690	O-ring	1
	15	394280	O-ring	5
	16	2260070	Shutter	1
	17	2760980	Seat	1
	18	770140	O-ring	1
	19	2760640	Ring	1
	20	390080	O-ring	2
	21	1540272	Screw	1
	22	1982520	Hose tail	1
	23	480480	O-ring	1
	24	1250280	Ball	1
	25	1560520	Spring	1
	26	2260190	O-ring	1
	27	3740010	Valve body	1
	28	1120681	O-ring	1
	29	1540630	O-ring	1
	30	3740020	Body	1
	31	880270	O-ring	1
	32	2260420	Screw	1
	33	2101770	O-ring	1
	34	2760131	Shutter	1
	35	2760200	Spring	1
	36	2761410	Injector	1
	37	1470210	O-ring	1
	38	2760270	O-ring	1
	39	2760230	Fitting	1
	40	2260480	Ring	1
	41	2260470	Pin	1
	42	2260460	Spring	1
	43	2021650	Washer	1
	44	1260821	O-ring	1
	45	3740050	Ring	1
	46	600180	O-ring	1
	47	3740040	Fitting	1
	48	2022201	Fork	1
	49	1122260	Fitting	1
	50	1560600	Fitting	1
	F	42780	Gasket kit	1

UN_CE_2362-AM

ANNOVI REVERBERI
The Power of Experience

MODENA 990 TSS

Version:
Serial number:
Code: **14740**

29/08/2018

400 V - 50 Hz

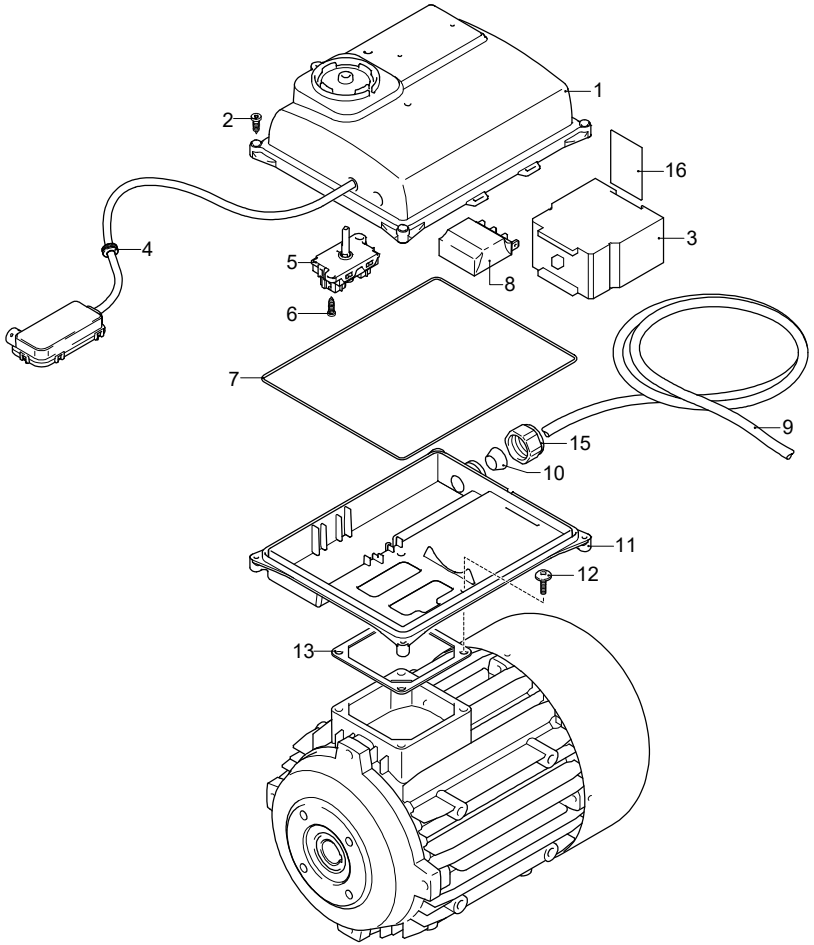

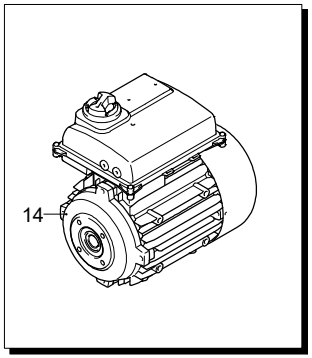

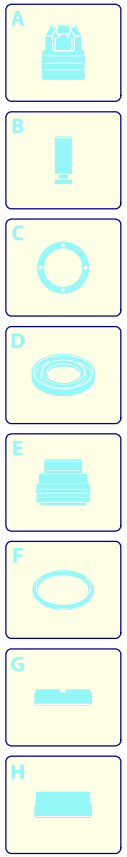

Validity	Pos.	Code	Description	Q
	1	3960740	Box	1
	2	2560720	Screw	4
	3	2369050	Mini-contactor	1
	4	2021480	Gland	1
	5	2900420	Switch	1
	6	2000210	Screw	2
	7	3960650	O-ring	1
	8	2360590	Board	1
	9	1700640	Cable	1
	10	3961090	Gasket	1
	11	3960730	Plate	1
	12	3960980	Screw	4
	13	1700100	Gasket	1
	14	45049	Motor	1
	15	3960640	Cable gland	1
	16	3960990	Guide	1

UN_CE_2358-AM

ANNOVI REVERBERI
The Power of Experience

MODENA 990 TSS

Version:
Serial number:
Code: **14740**

29/08/2018

400 V - 50 Hz

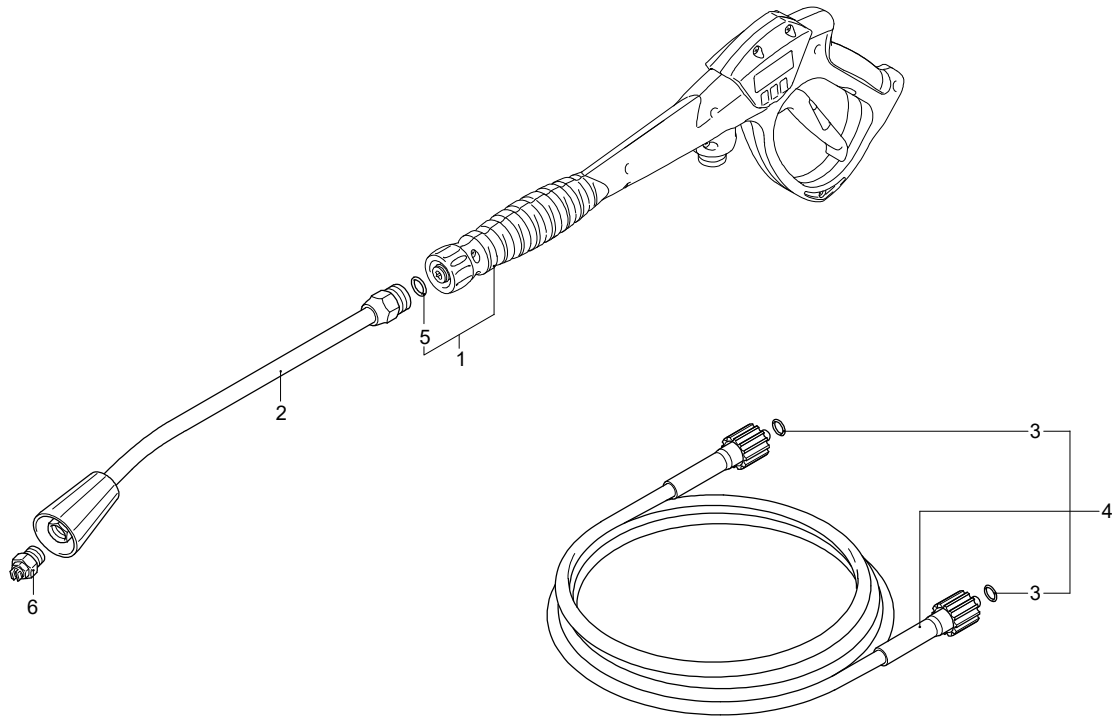

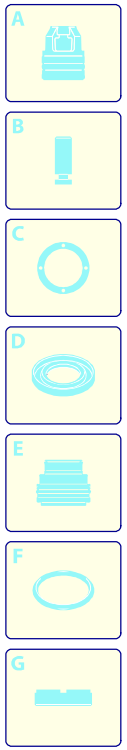

Validity	Pos.	Code	Description	Q
	1	46203	Gun	1
	2	40826	Lance	1
	3	2000570	O-ring	2
	4	3961050	High pressure hose	1
	5	391000	O-ring	1
	6	3157	Nozzle	1

UN_CE_2359-AM