ANNOVI REVERBERI
The Power of Experience

MODENA 940 TSS

Version:
Serial number:
Code: **14737**

29/08/2018

400 V - 50 Hz

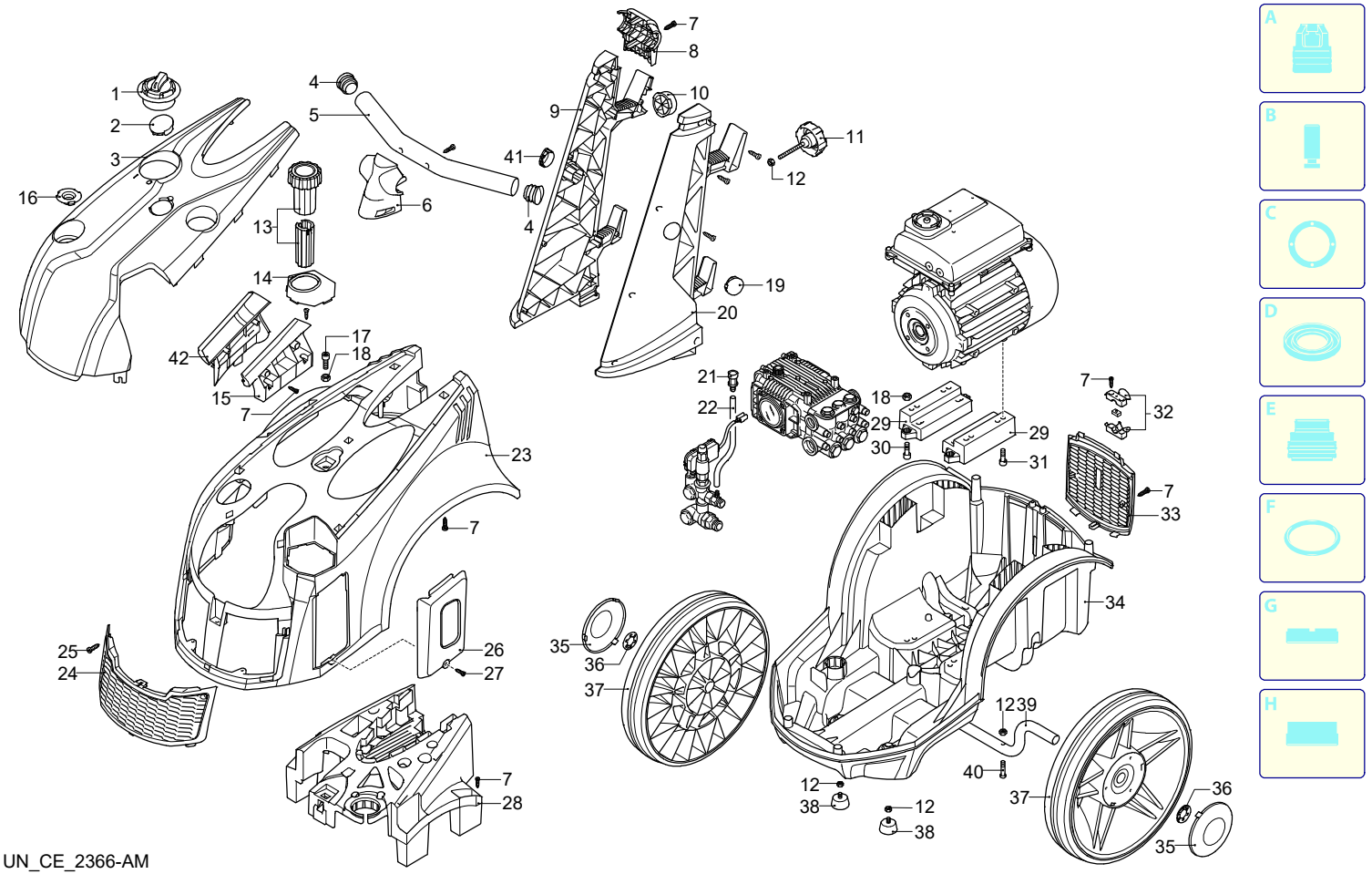

UN_CE_2366-AM

Validity	Pos.	Code	Description	Q
	1	3560510	Knob	1
	2	3560530	Plug	1
	3	3560400	Casing	1
	4	3560500	Plug	2
	5	3560470	Handle	1
	6	3560480	Support	1
	7	2100300	Screw	13
	8	3560490	Support	1
	9	3560300	Handle	1
	10	2500130	Rubber foot	1
	11	3569004	Knob	1
	12	390440	Nut	5
	13	3569000	Knob	1
	14	3560760	Cover	1
	15	3560750	Accessories carrier	1
	16	3560520	Support	1
	17	540290	Screw	1
	18	380240	Nut	5
	19	3560730	Plug	1
	20	3560290	Handle	1
	21	1341030	Filter	1
	22	1266650	Pipe	1
	23	3560280	Casing	1
	24	3560410	Guard	1
	25	2440290	Screw	2
	26	3560640	Casing	1
	27	4240590	Screw	1
	28	3560360	Support	1
	29	3560340	Support	2
	30	180370	Screw	4
	31	850250	Screw	4
	32	3560600	Cable gland	1
	33	3560380	Guard	1
	34	3560270	Base	1
	35	3560330	Cover	2
	36	380620	Washer	2
	37	3560320	Wheel	2
	38	2360780	Vibration damper	2
	39	3560350	Axle	1
	40	3780650	Screw	2
	41	3560740	Plug	1
	42	3560390	Accessories carrier	1

ANNOVI REVERBERI
The Power of Experience

MODENA 940 TSS

Version:
Serial number:
Code: **14737**

29/08/2018

400 V - 50 Hz

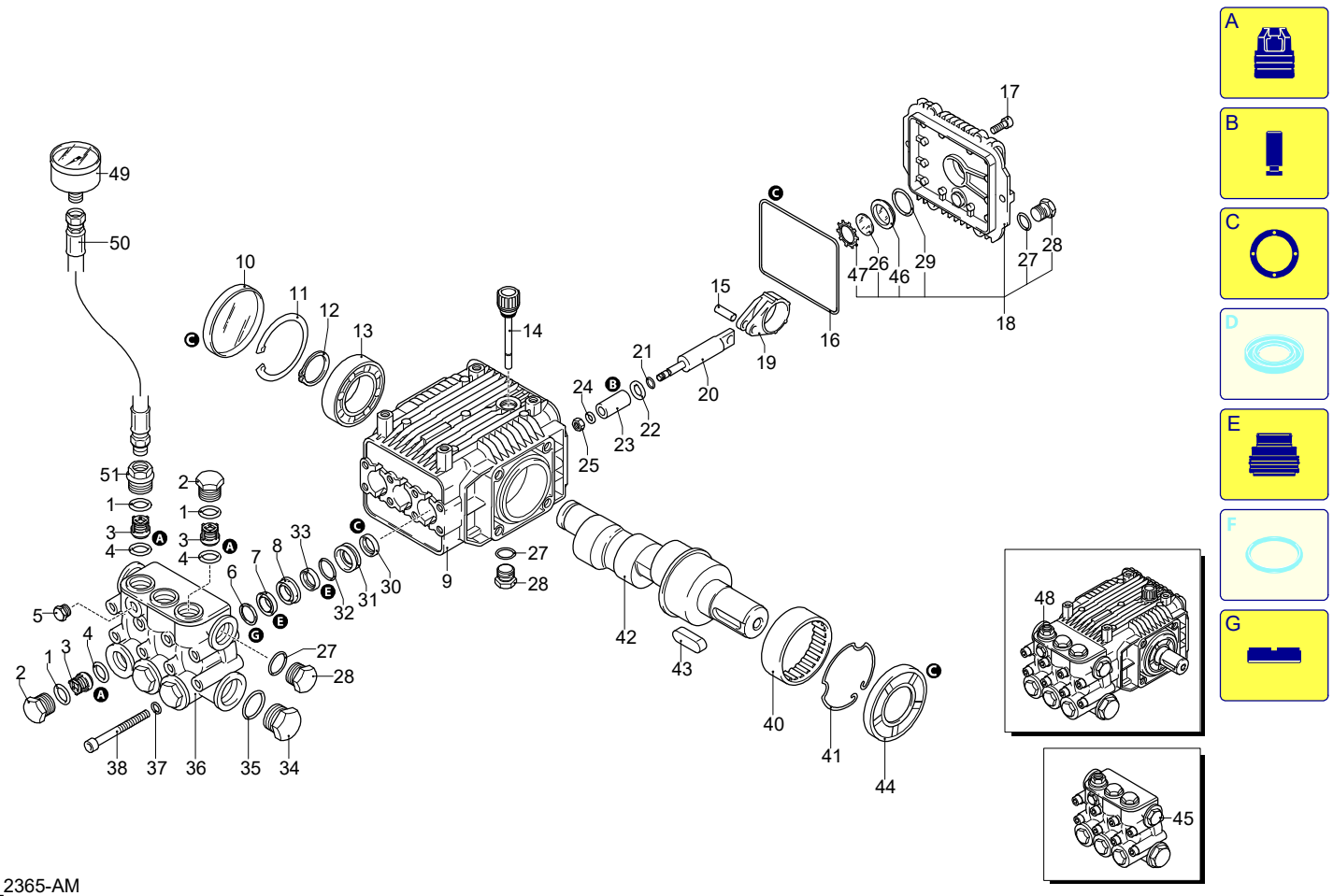

UN_CE_2365-AM

Validity	Pos.	Code	Description	Q
	1	960160	O-ring	6
	2	1260160	Plug	5
	3	1269050	Complete valve	6
	4	880830	O-ring	6
	5	620301	Plug	1
	6	1780140	Ring	3
	7	1260220	Water seal	3
	8	1780110	Piston guide	3
	9	1780010	Pump body	1
	10	1266740	Oil seal	1
	11	1260790	Ring	1
	12	1780550	Ring	1
	13	1780490	Bearing	1
	14	880130	Plug	1
	15	1780050	Pin	3
	16	1780510	O-ring	1
	17	1200430	Screw	6
	18	1789010	Cover	1
	19	1780040	Connecting-rod	3
	20	1780060	Piston	3
	21	480480	O-ring	3
	22	1260091	Plate	3
	23	1780080	Piston	3
	24	1260100	Washer	3
	25	1260110	Nut	3
	26	1780690	Plate	1
	27	740290	O-ring	3
	28	1980740	Plug	3
	29	1140450	O-ring	1
	30	1260460	Oil seal	3
	31	1780120	Piston guide	3
	32	770260	O-ring	3
	33	1260450	Water seal	3
	34	820361	Plug	1
	35	180101	O-ring	1
	36	1780020	Head	1
	37	1381550	Washer	8
	38	1322730	Screw	8
	40	1321190	Bearing	1
	41	1321080	Ring	1
	42	1780160	Shaft	1
	43	1380520	Key	1
	44	1260750	Ring	1
	45	1789202	Head assembly	1
	46	1260250	Level gauge	1
	47	1260430	Ring	1
	48	7906	Pump assembly	1
	49	43792	Pressure gauge	1
	50	3560800	Pipe	1
	51	1260164	Plug	1
	A	1864	Valve kit	1
	B	2746	Piston kit	1
	C	2786	Oil seal kit	1
	E	2747	Water seal kit	1
	G	2745	Support ring kit	1

ANNOVI REVERBERI
The Power of Experience

MODENA 940 TSS

Version:
Serial number:
Code: **14737**

29/08/2018

400 V - 50 Hz

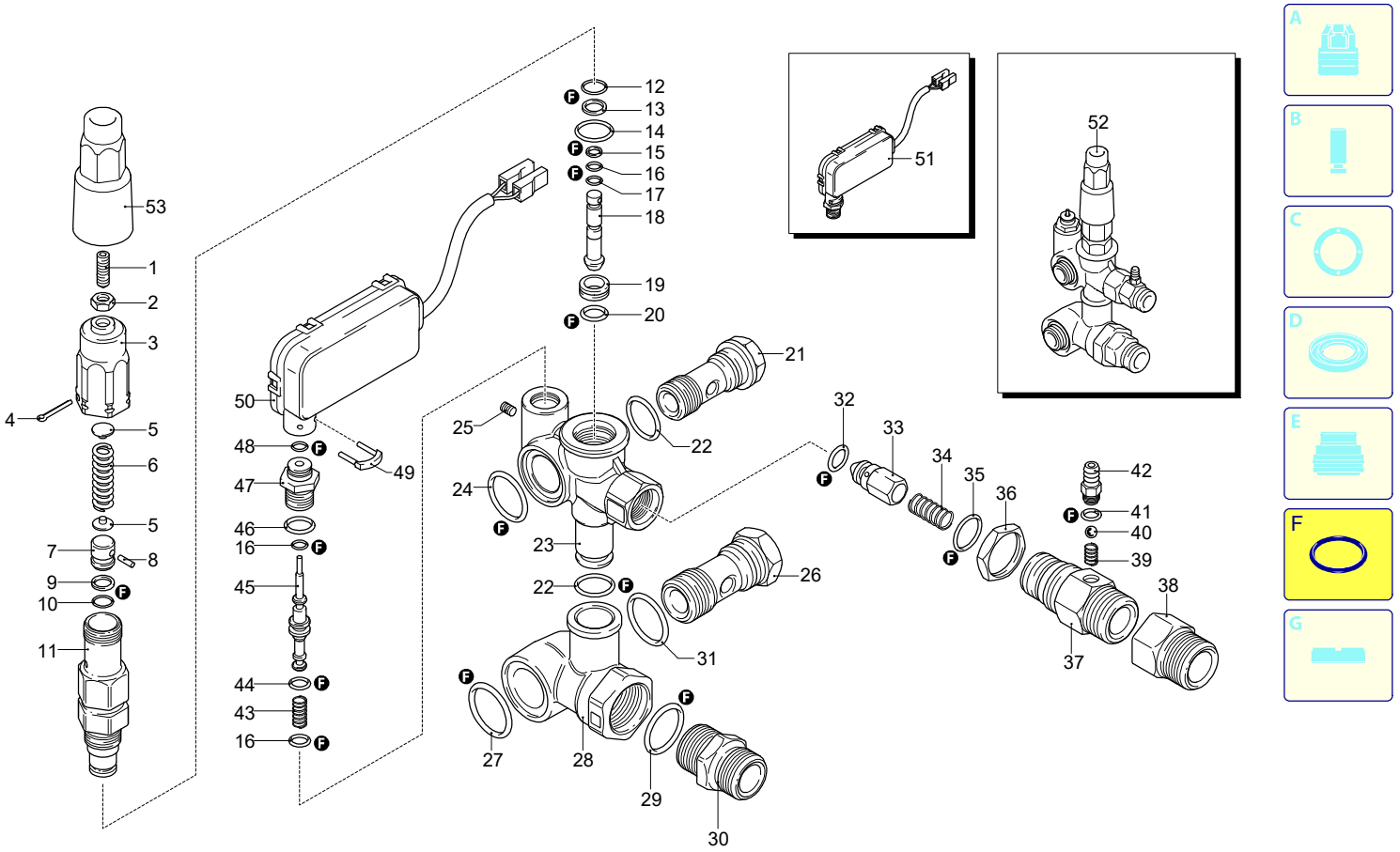

UN_CE_2342-MN

Validity	Pos.	Code	Description	Q
	1	392840	Screw	1
	2	1980300	Nut	1
	3	2500540	Insert	1
	4	2500550	Split pin	1
	5	1980220	Wobble plate	2
	6	1271070	Spring	1
	7	1080041	Piston	1
	8	1080070	Pin	1
	9	1080401	Ring	1
	10	1080250	O-ring	1
	11	1980210	Piston guide	1
	12	740290	O-ring	1
	13	800560	O-ring	1
	14	880830	O-ring	1
	15	1271170	Ring	1
	16	1080192	O-ring	3
	17	1120681	O-ring	1
	18	1271160	Piston	1
	19	2460420	Seat	1
	20	1080250	O-ring	1
	21	1540272	Screw	1
	22	390080	O-ring	2
	23	1540660	Valve body	1
	24	1140450	O-ring	1
	25	1981190	Screw	1
	26	2260420	Screw	1
	27	1540630	O-ring	1
	28	1540280	Suction fitting	1
	29	480440	O-ring	1
	30	3560860	Fitting	1
	31	880270	O-ring	1
	32	1460430	O-ring	1
	33	1540170	Shutter	1
	34	1080091	Spring	1
	35	394280	O-ring	1
	36	1540300	Nut	1
	37	1540290	Fitting	1
	38	1122260	Fitting	1
	39	1560520	Spring	1
	40	1250280	Ball	1
	41	480480	O-ring	1
	42	1560490	Hose tail	1
	43	1981320	Spring	1
	44	660191	O-ring	1
	45	1540881	Piston	1
	46	880840	O-ring	1
	47	1540870	Plug	1
	48	1260820	O-ring	1
	49	2022201	Fork	1
	50	2029800	TSS box assembly	1
	51	42990	TSS kit	1
	52	1549051	Complete valve	1
	53	3961000	Extension	1
	F	42451	Gasket kit	1

ANNOVI REVERBERI
The Power of Experience

MODENA 940 TSS

Version:
Serial number:
Code: **14737**

29/08/2018

400 V - 50 Hz

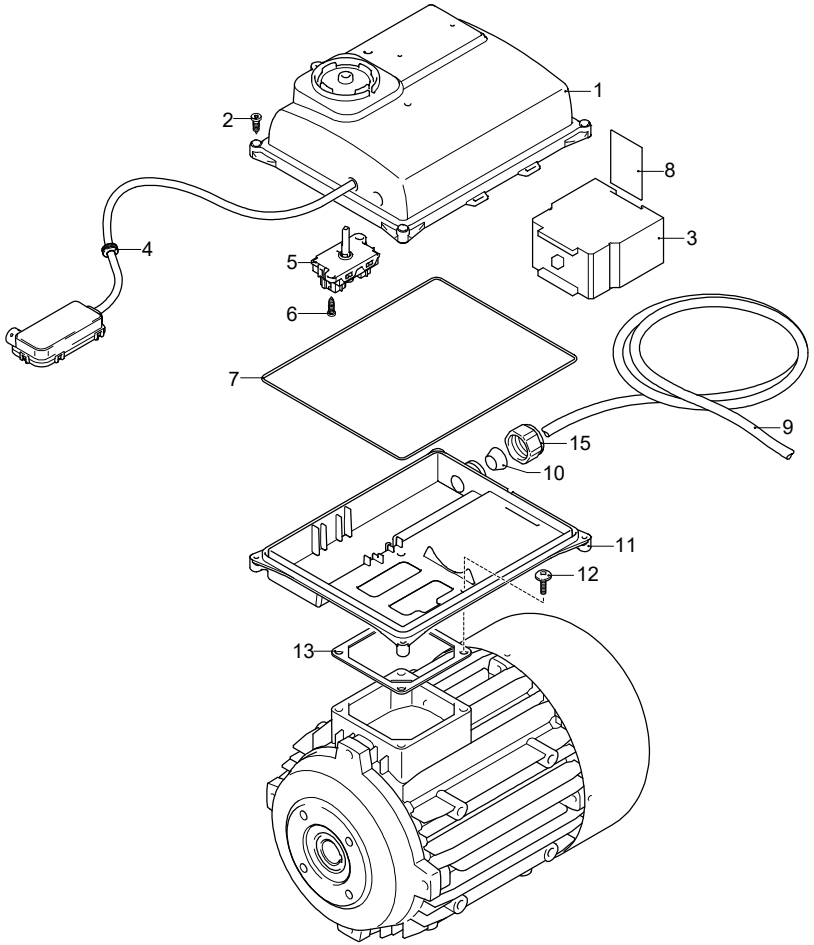

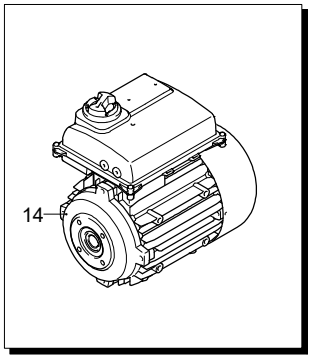

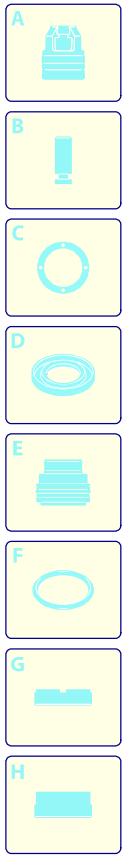

Validity	Pos.	Code	Description	Q
	1	3960740	Box	1
	2	2560720	Screw	4
	3	2369050	Mini-contactor	1
	4	2021480	Gland	1
	5	2900420	Switch	1
	6	2000210	Screw	2
	7	3960650	O-ring	1
	8	3960990	Guide	1
	9	1700640	Cable	1
	10	3961090	Gasket	1
	11	3960730	Plate	1
	12	3960980	Screw	4
	13	1700100	Gasket	1
	14	45045	Motor	1
	15	3960640	Cable gland	1

UN_CE_2364-AM

ANNOVI REVERBERI
The Power of Experience

MODENA 940 TSS

Version:
Serial number:
Code: **14737**

29/08/2018

400 V - 50 Hz

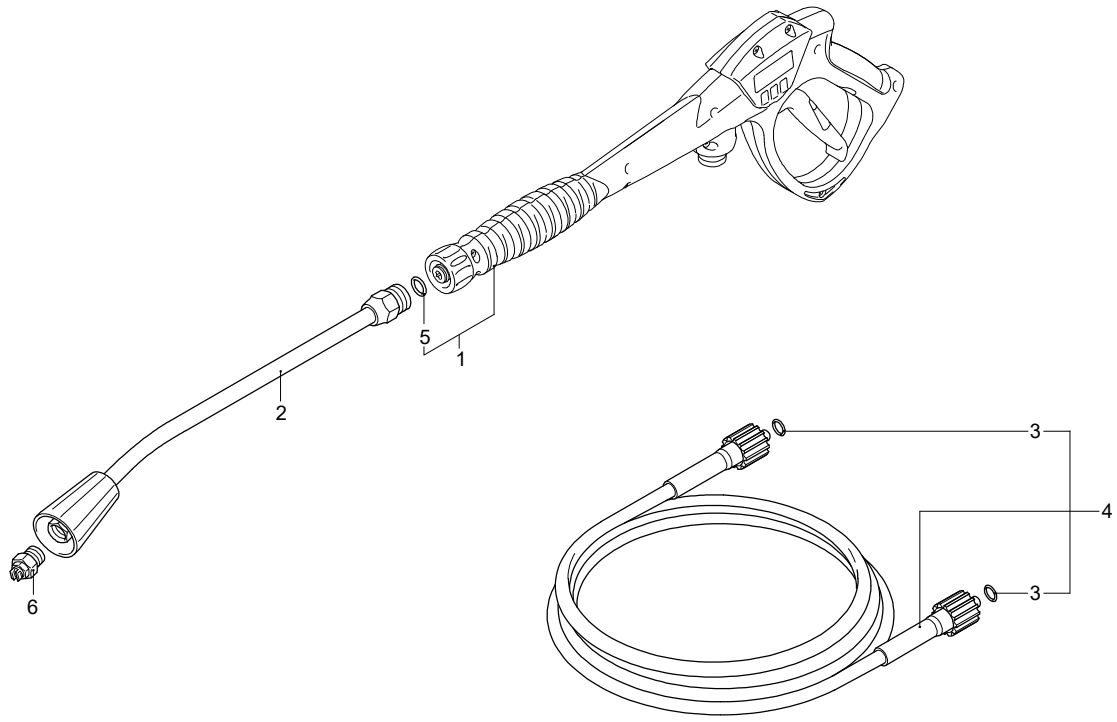

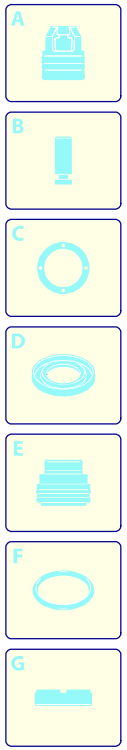

Validity	Pos.	Code	Description	Q
	1	46202	Gun	1
	2	40826	Lance	1
	3	2000570	O-ring	2
	4	3961050	High pressure hose	1
	5	391000	O-ring	1
	6	3095	Nozzle	1

UN_CE_2359-AM