Model 117

Version:

Serial number:

Code: **13689**

07/04/2014

220-240 V - 50 Hz | **schuko**

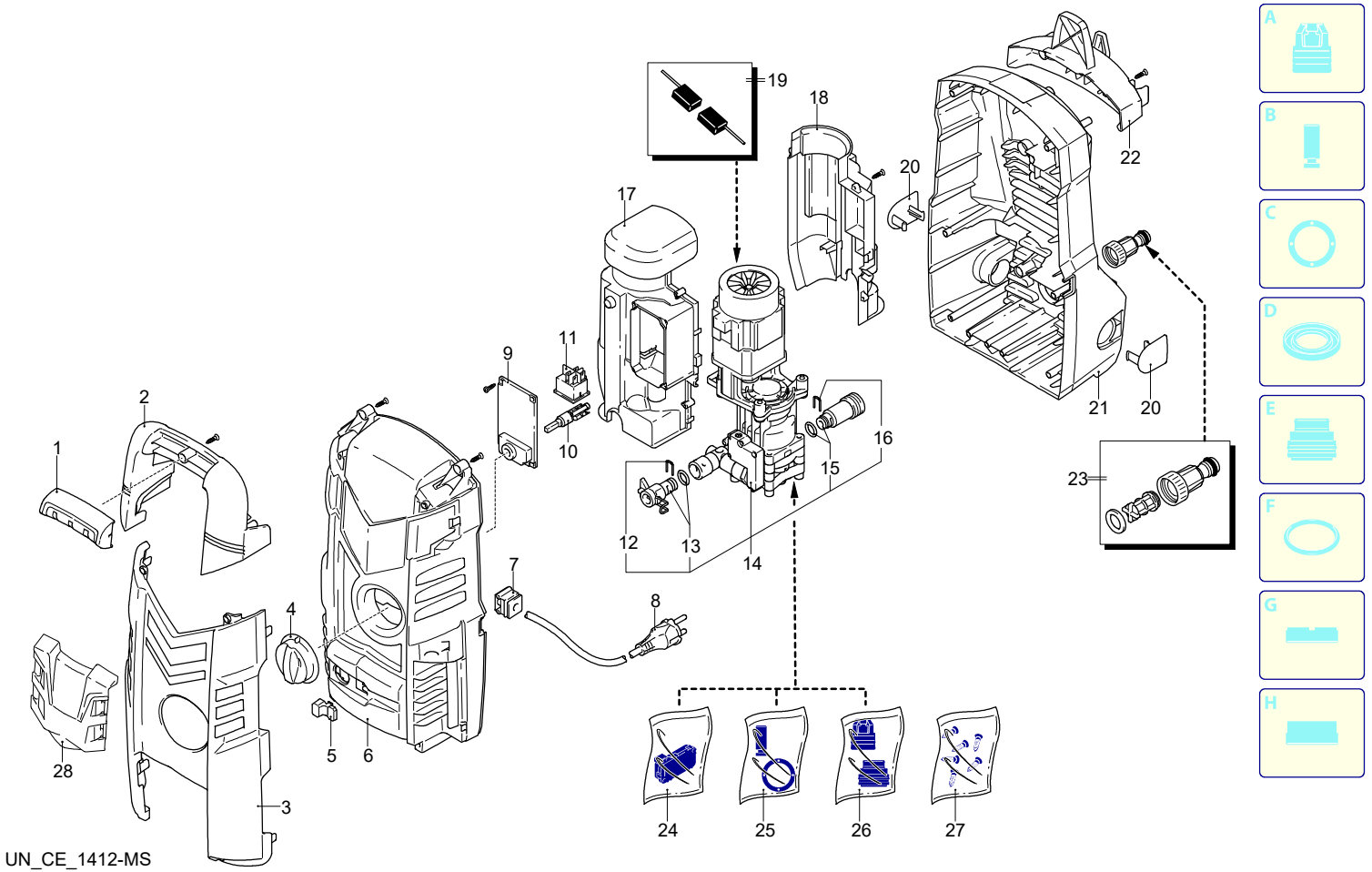

UN_CE_1412-MS

Validity	Pos.	Code	Description	Q
	1	4100450	Knob	1
	2	4100160	Handle	1
	3	4100151	Guard	1
	4	4100470	Knob	1
	5	4100181	Lever	1
	6	4100140	Casing	1
	7	3080580	Cable gland	1
	8	50940	Cable	1
	9	3980130	Cover	1
	10	3980160	Pin	1
	11	3081450	Switch	1
	12	3500090	Fork	1
	13	4101200	Delivery kit	1
	14	4101190	Electric pump assembly	1
	15	3480120	Suction kit	1
	16	3480160	Fork	1
	17	3980140	Conveyor	1
	18	3980150	Conveyor	1
	19	3480170	Brush kit for motor	1
	20	3980090	Cover	2
	21	3980010	Base	1
	22	3980030	Guard	1
	23	3082130	Water coupling kit	1
	24	3480130	TSS kit	1
	25	3480150	Piston + seals kit	1
	26	3480140	Valves + seals kit	1
	27	4100820	Screw kit	1
	28	4100460	Guard	1

Model 117

Version:

Serial number:

Code: **13689**

07/04/2014

220-240 V - 50 Hz | **schuko**

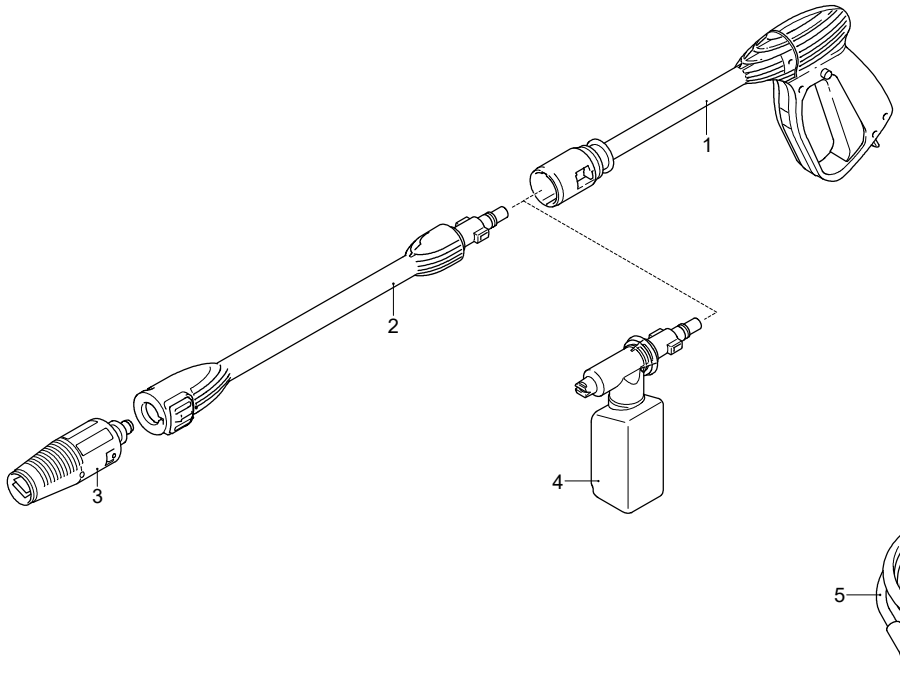

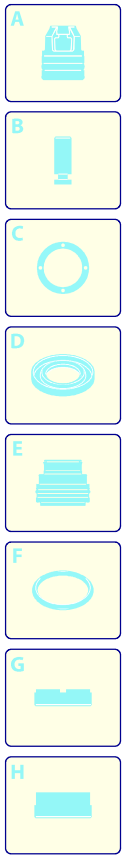

Validity	Pos.	Code	Description	Q
	1	3082283	Gun	1
	2	4100771	Extension	1
	3	4100790	Lance head	1
	4	3480200	Tank	1
	5	3500340	High pressure hose	1

UN_CE_1413-MS