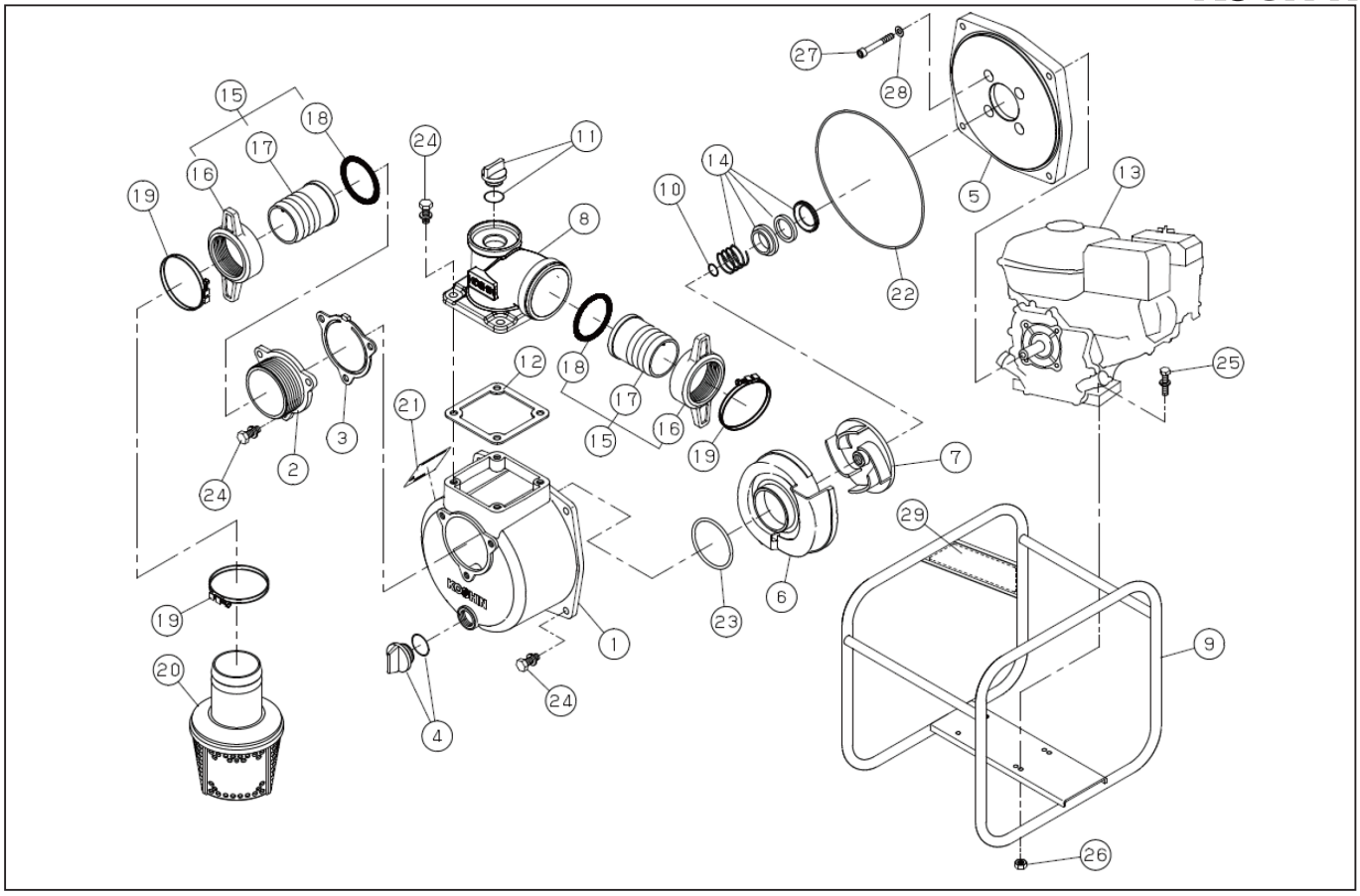

DWG No.012935811 MODEL : SEV-80X FORM : SEV-80X-BAW-2 (K180-A3-P)

No.	PARTS CODE	PARTS NAME	QTY	MATERIAL/SIZE	REMARKS
1	0120196	PUMP CASING	1	ADC	
2	0112797	SUCTION FLANGE	1	ADC	
3	0112799	CHECK VALVE	1	NBR	
4	0118078	20A PLUG SET	1		
5	0112796	FLANGE BRACKET	1	ADC	
6	0121047	VOLUTE CASING	1	FC	
7	0121046	IMPELLER	1	FC	
8	0123760	DELIVERY FLANGE	1	ADC (G)	
9	0127387	BASE SET	1		
10	0110491	IMPELLER ADJUSTING WASHER	3	C2801P T0.3	
11	0118079	25A PLUG SET	1		
12	0123206	FLANGE PACKING	1	CR	
13	-	ENGINE	1	KOSHIN K180	
14	0110664	MECHANICAL SEAL	1	φ 2 0	
15	0127125	COUPLING SET	2		
16	0122500	COUPLING	2	ABS (G)	
17	0122501	NIPPLE	2	ABS	
18	0123216	COUPLING PACKING	2	NBR	
19	0121066	HOSE BAND	3	φ 90	
20	0127126	STRAINER SET	1	PP	
21	0122687	NAME PLATE	1		
22	0123214	O-RING	1	NBR 1517-46.5	
23	0113989	O-RING	1	NBR P74	
24	743119061	BOLT	11	SWRM M10 × 25	
25	743119053	BOLT	4	SWRM M8 × 40	
26	827419008	NUT	4	SWRM M8	
27	734532076	SOCKET BOLT	4	SCM CS M8 × 60	
28	854255008	SEAL WASHER	4	φ 8	
29	0122307	SIDE PANEL LABEL	1		

♦ Bare engine can not be supplied