PACER
Division of ASM Industries, Inc.

1½” Self-Priming Centrifugal Pump

Model: SE1½CL-G1.5C

Price Code: P-58-11C4-G1.5C

Driver: Leeson 60Hz Electric Motor (1.5 HP) Single Phase

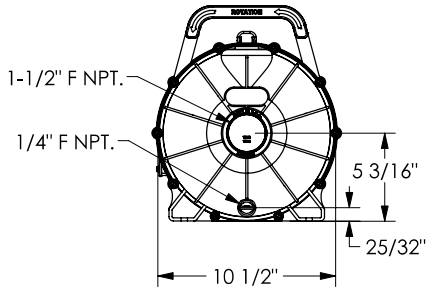

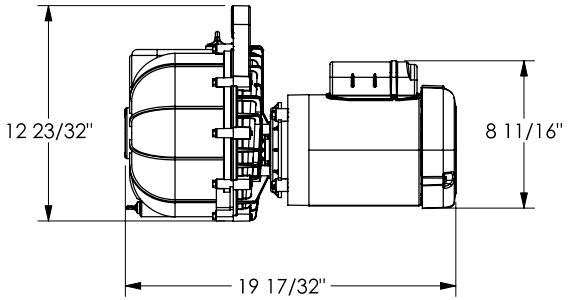

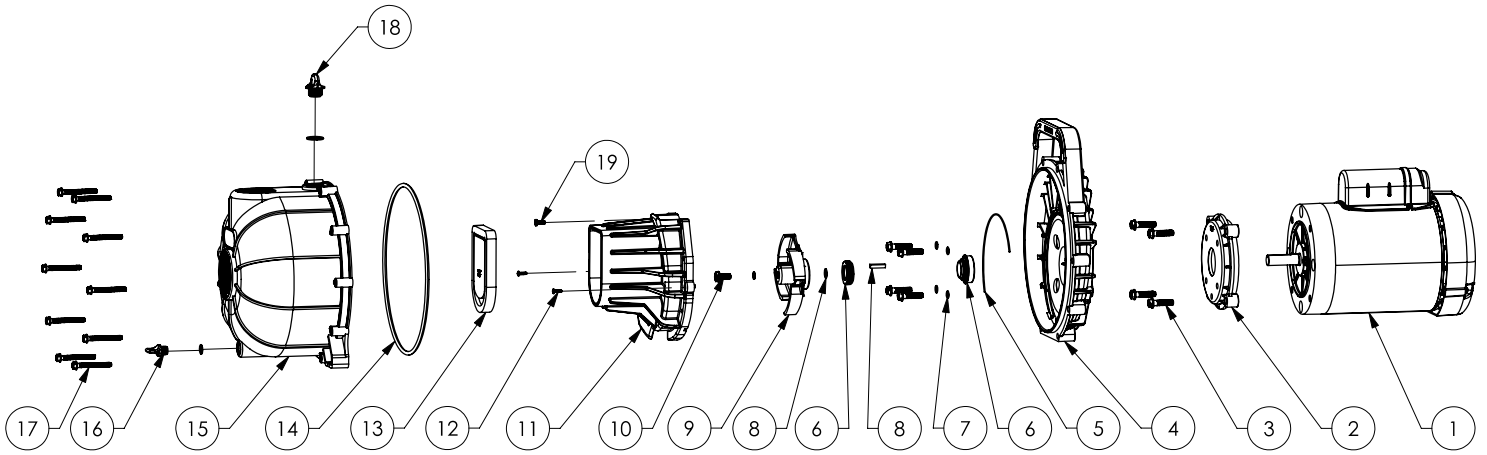

PACER
Division of ASM Industries, Inc.

1½" Self-Priming Centrifugal Pump

Model: SE1½CL-G1.5C

Price Code: P-58-11C4-G1.5C

Driver: Leeson 60Hz Electric Motor (1.5 HP) Single Phase

NO.	DESCRIPTION			QTY	PART NO.
1	Leeson 1.5 HP Electric Motor		1Φ	1	58-0827-C
2	C-Face Adapter	PPE		1	58-1010-20A
3	Mounting Screw	SS	5/16-24x1 1/4"	4	58-1015-10
4	Bracket	PET		1	58-0703-30B
5	O-Ring Segment	EPDM		1	58-0754-72
6	Shaft Seal	EPDM, SS 316, carbon/ceramic 3/4"		1	58-0714-12
7	Bracket Screw and O-Ring	SS EPDM	5/16-24x1 1/4"	4	58-0715-12
8	Key & Shim	SS	3/16" Square x 15/16" Long	1	58-0778S
9	Impeller	PET	5 Vane, .535" Wide, ø5.5"	1	58-0706-30
10	Impeller Screw and O-Ring	SS EPDM	5/16-24x3/4"	1	58-0716-12
11	Volute	Flat PET		1	58-0954-30
12	Volute Side Screw	SS	6-CCx1/2"	2	58-0725-10
13	Check Valve	EPDM		1	58-0705-72
14	Body O-Ring	EPDM		1	58-0719-72
15	Body	PET, black	1½" F NPT.	1	58-1001-30B
16	Drain Plug and O-Ring	PET EPDM		1	58-0723-32
17	Body Bolt	SS	18-8 1/4-20x2.125"	10	58-1206-10
18	Filler Plug and O-Ring	PET EPDM		1	58-0722-32B
19	Volute Top Screw	SS	10-24x1-1/2"	1	58-0997-10