ANNOVI REVERBERI
The Power of Experience

PROLINER SV 1310 TSS

Version:
Serial number:
Code: **12402**

10/07/2017

230 V - 50 Hz | **schuko**

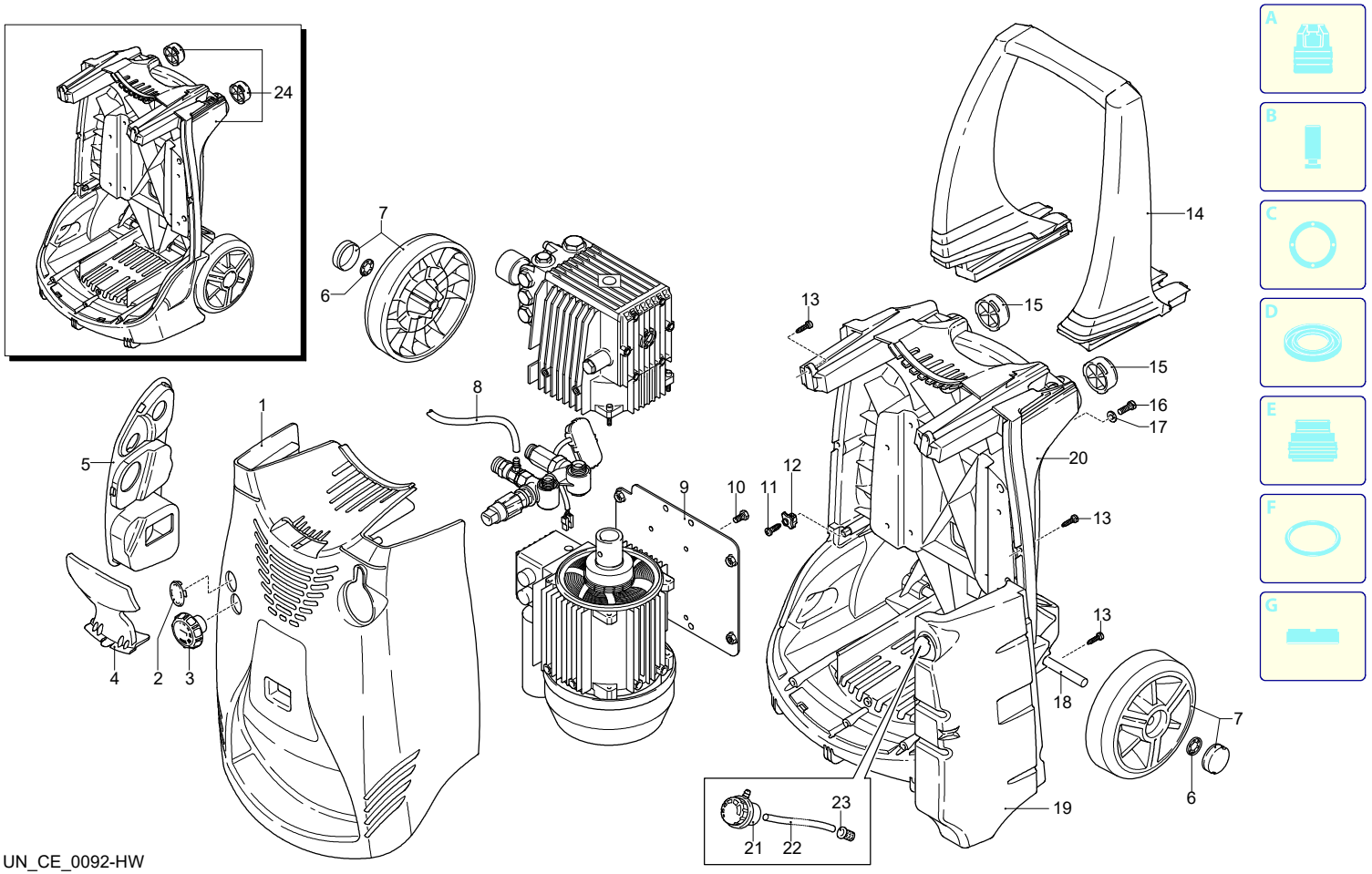

UN_CE_0092-HW

Validity	Pos.	Code	Description	Q
	1	2500044	Yellow casing	1
	2	2500340	Plug	1
	3	2500310	Knob	1
	4	2500050	Hook	1
	5	2500240	Casing insert	1
	6	1680880	Washer	2
	7	2500320	Wheel	2
	8	2500330	Detergent hose	1
	9	2500100	Plate	1
	10	1260470	Screw	4
	11	2100300	Screw	1
	12	2600100	Cable gland	1
	13	2100300	Screw	7
	14	2500020	Handle	1
	15	2500130	Rubber foot	2
	16	880280	Screw	4
	17	2180300	Washer	4
	18	2500120	Axle	1
	19	2500110	Tank	1
	20	2500010	Base	1
	21	42113	Plug assembly	1
	22	2500330	Detergent hose	1
	23	2000230	Filter	1
	24	2509000	Base assembly	1

ANNOVI REVERBERI
The Power of Experience

PROLINER SV 1310 TSS

Version:
Serial number:
Code: **12402**

10/07/2017

230 V - 50 Hz | **schuko**

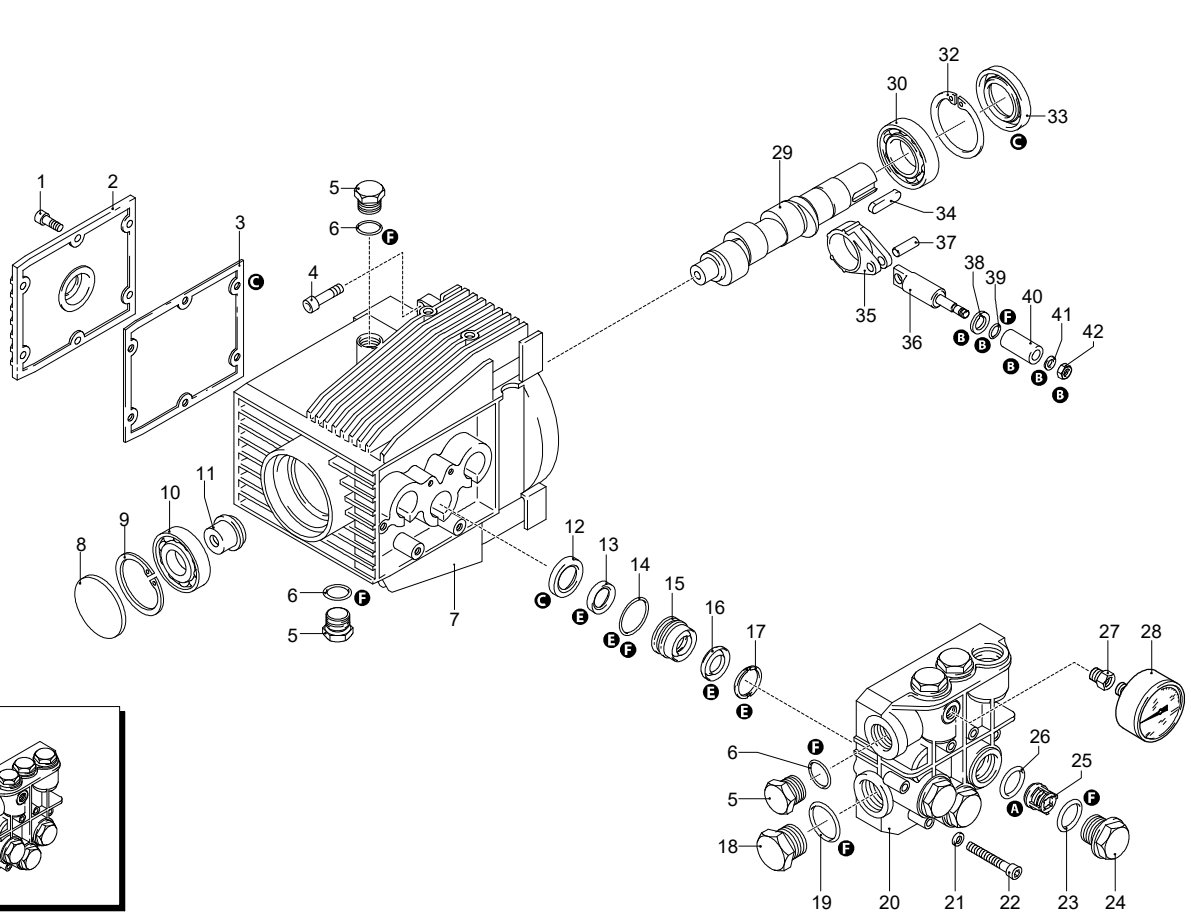

UN_CE_0093-AW

Validity	Pos.	Code	Description	Q
	1	1260760	Screw	6
	2	1269101	Cover	1
	3	1260040	Oil seal	1
	4	1260780	Screw	4
	5	1980740	Plug	3
	6	740290	O-ring	3
	7	1260012	Pump body	1
	8	1266740	Oil seal	1
	9	1260790	Ring	1
	10	1320370	Bearing	1
	11	1320330	Bushing	1
	12	1260460	Oil seal	3
	13	1260450	Water seal	3
	14	1260420	O-ring	3
	15	1320351	Piston guide	3
	16	1780720	Water seal	3
	17	1320340	Ring	3
	18	820361	Plug	1
	19	180101	O-ring	1
	20	1320020	Head	1
	21	1381550	Washer	6
	22	680570	Screw	6
	23	960160	O-ring	6
	24	1260162	Plug	6
	25	1269050	Complete valve	6
	26	880830	O-ring	6
	27	1343160	Fitting	1
	28	3226	Pressure gauge	1
	29	1260180	Shaft	1
	30	1320370	Bearing	1
	32	1260790	Ring	1
	33	1260750	Ring	1
	34	1380520	Key	1
	35	1320140	Connecting-rod	3
	36	1260070	Piston	3
	37	1260080	Pin	3
	38	1260091	Plate	3
	39	480480	O-ring	3
	40	1260211	Piston	3
	41	1260100	Washer	3
	42	1260110	Nut	3
	43	1269284	Head assembly	1
	A	1864	Valve kit	1
	B	2629	Piston kit	1
	C	1865	Oil seal kit	1
	E	42479	Water seal kit	1
	F	2040	Gasket kit	1

ANNOVI REVERBERI
The Power of Experience

PROLINER SV 1310 TSS

Version:
Serial number:
Code: **12402**

10/07/2017

230 V - 50 Hz | **schuko**

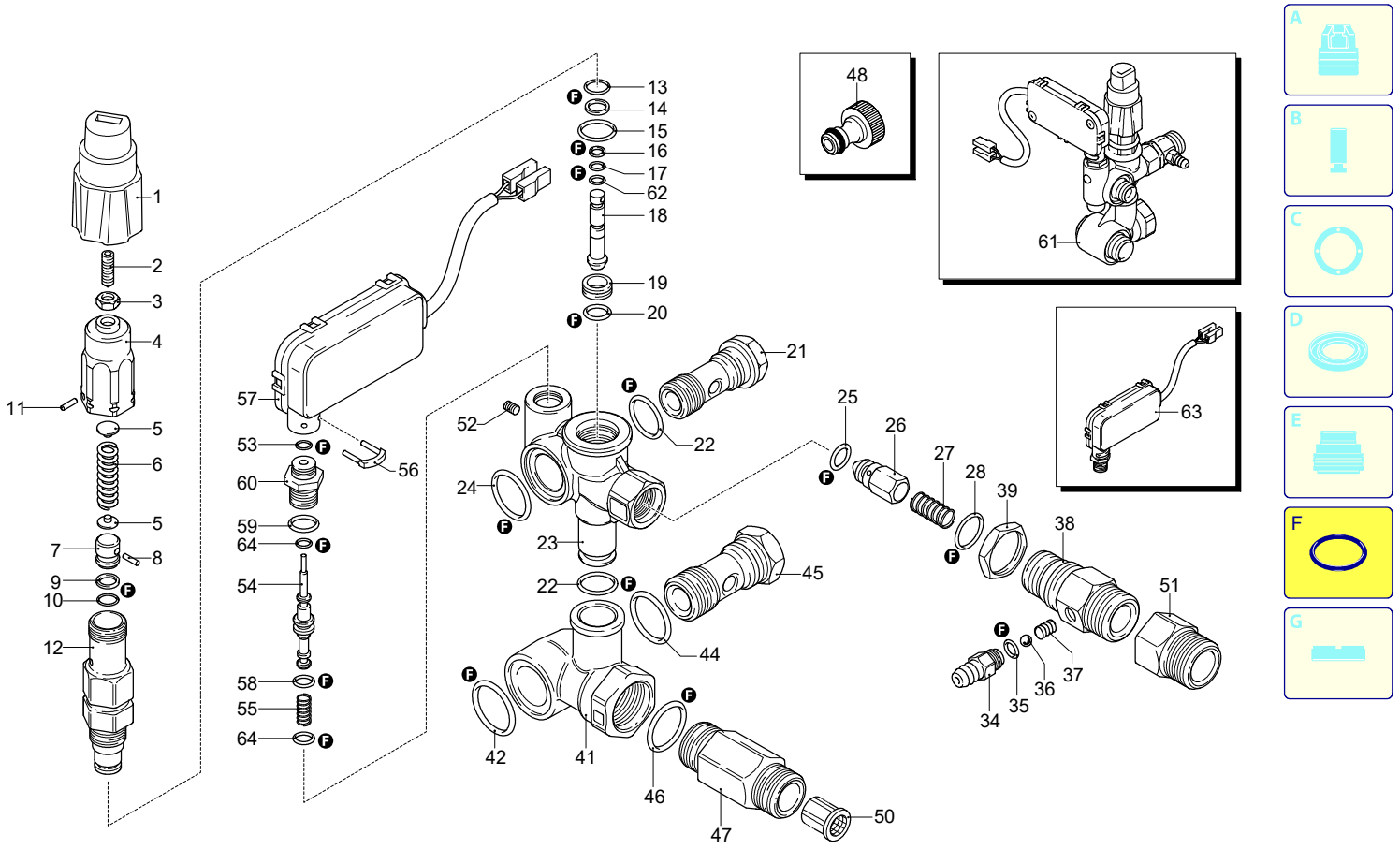

UN_CE_0094-ET

Validity	Pos.	Code	Description	Q
	1	2500210	Knob	1
	2	392840	Screw	1
	3	1980300	Nut	1
	4	2500540	Insert	1
	5	1980220	Wobble plate	2
	6	1271070	Spring	1
	7	1080041	Piston	1
	8	1080070	Pin	1
	9	1080401	Ring	1
	10	1080250	O-ring	1
	11	1080070	Pin	1
	12	1980210	Piston guide	1
	13	740290	O-ring	1
	14	800560	O-ring	1
	15	880830	O-ring	1
	16	1271170	Ring	1
	17	1080190	O-ring	1
	18	1271160	Piston	1
	19	1980200	Seat	1
	20	1470210	O-ring	1
	21	1540272	Screw	1
	22	390080	O-ring	2
	23	1540660	Valve body	1
	24	1140450	O-ring	1
	25	1460430	O-ring	1
	26	1540170	Shutter	1
	27	1080091	Spring	1
	28	394280	O-ring	1
	34	1560490	Hose tail	1
	35	480480	O-ring	1
	36	1250280	Ball	1
	37	1560520	Spring	1
	38	1540570	Fitting	1
	39	1540300	Nut	1
	41	1540280	Suction fitting	1
	42	1540630	O-ring	1
	44	880270	O-ring	1
	45	2260420	Screw	1
	46	480440	O-ring	1
	47	1560900	Fitting	1
	48	1461470	Fitting	1
	50	1340260	Filter	1
	51	1123960	Fitting	1
	52	1981190	Screw	1
	53	1260820	O-ring	1
	54	1540881	Piston	1
	55	1981320	Spring	1
	56	2022201	Fork	1
	57	2029753	TSS box assembly	1
	58	660191	O-ring	1
	59	880840	O-ring	1
	60	1540870	Plug	1
	61	22075	Complete valve	1
	62	1120681	O-ring	1
	63	42458	TSS kit	1
	64	1080192	O-ring	2
	F	42451	Gasket kit	1

ANNOVI REVERBERI
The Power of Experience

PROLINER SV 1310 TSS

Version:
Serial number:
Code: **12402**

10/07/2017

230 V - 50 Hz | **schuko**

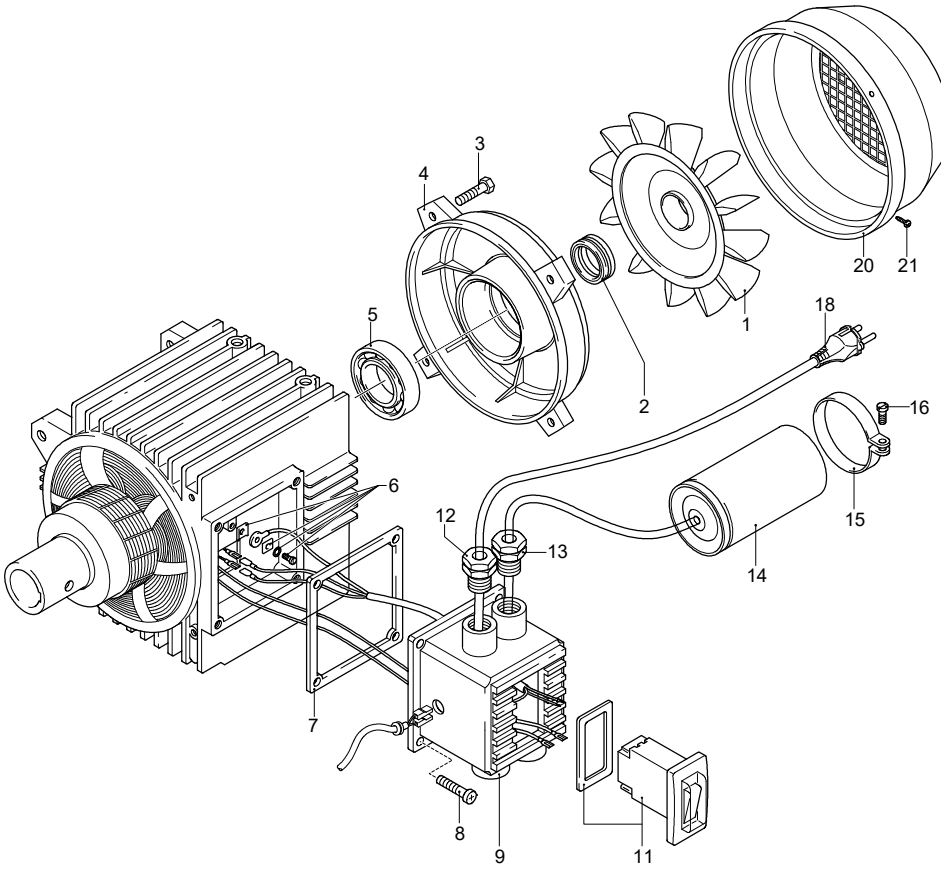

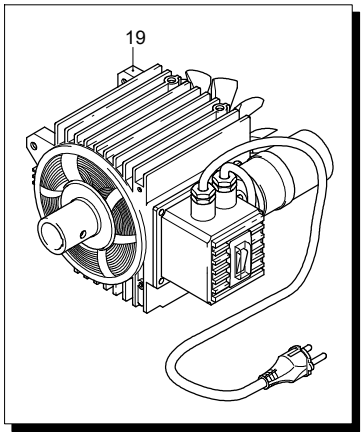

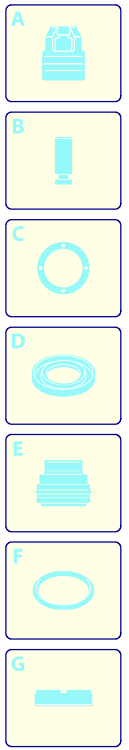

Validity	Pos.	Code	Description	Q
	1	1260300	Fan	1
	2	1260970	Seal	1
	3	480621	Screw	4
	4	1260961	Shield	1
	5	1260950	Bearing	1
	6	1269100	Clamp	1
	7	1260400	Gasket	1
	8	1261560	Screw	4
	9	1272010	Box	1
	11	1272370	Switch	1
	12	1271950	Cable retainer	1
	13	1269090	Cable retainer	1
	14	2360400	Capacitor	1
	15	1340280	Clamp	1
	16	1260810	Screw	1
	18	1270950	Cable	1
	19	4553	Motor	1
	20	1271660	Fan cowling	1
	21	1261570	Screw	4

UN_CE_0097-HW

ANNOVI REVERBERI
The Power of Experience

PROLINER SV 1310 TSS

Version:
Serial number:
Code: **12402**

10/07/2017

230 V - 50 Hz | **schuko**

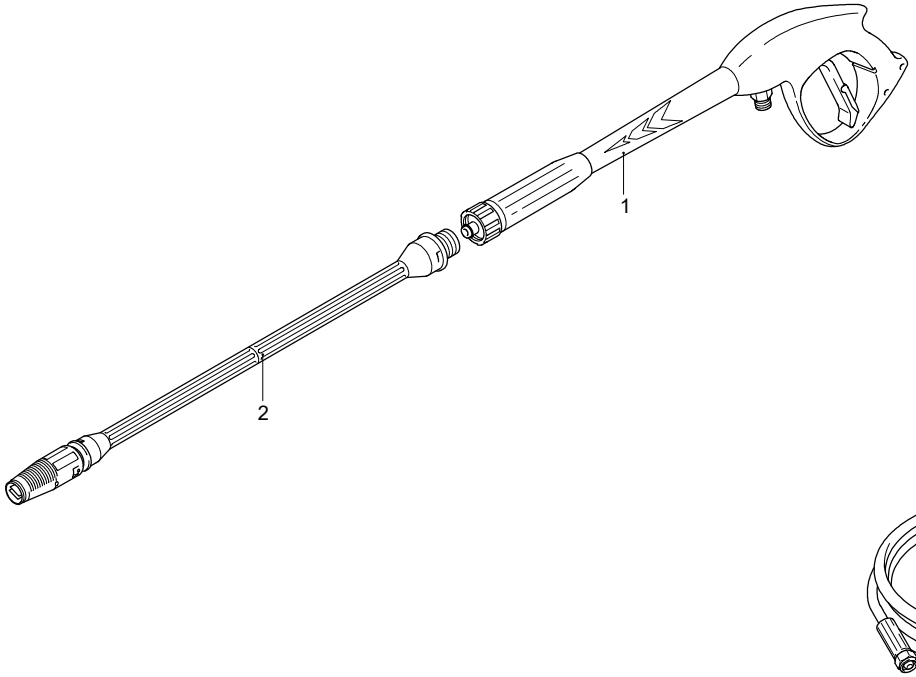

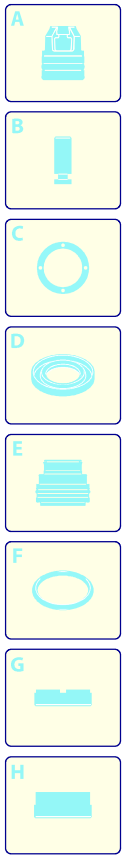

Validity	Pos.	Code	Description	Q
	1	40925	Gun	1
	2	41555	Lance+lance head	1
	3	1271351	High pressure hose	1
	4	2000770	O-ring	1

UN_CE_0061-CR