NORTH STAR
Proven Performance

M99919H.1

MODEL NUMBER: 99918, 99919, 99920, 99921

SERIAL NUMBER: _____

Owner's Manual

Instructions for Assembly, Testing, Operation, Servicing, and Storage

Northstar Spot Sprayer: For outdoor use with non-potable liquids such as agricultural pesticides and other water based liquids**

⚠ WARNING

READ and UNDERSTAND the Owner's Manual completely before using this sprayer. Assemble, test, and use only in accordance with the Owner's Manual instructions.

READ and FOLLOW chemical label instructions. Pesticides are hazardous chemicals.

KNOW emergency procedures BEFORE handling chemicals. Sprayer leaks, bodily chemical contact, poisoning, and spills require immediate response.

AVOID inhaling, ingesting, or coming into contact with any chemicals.

WEAR personal protective gear when filling, using, cleaning, and servicing the sprayer.

KEEP sprayer and spray materials away from children and pets. Pesticides are especially toxic to them.

EXERCISE CAUTION in vehicle handling when towing/hauling a filled sprayer to avoid loss of control or sprayer overturning.

DO NOT TURN ON POWER to sprayer until ready to spray in order to avoid unintentional spray release.

ALWAYS keep a fire extinguisher rated "ABC" nearby.

Improper use of the sprayer or handling of chemicals could result in serious injury or illness to the operator or nearby persons/animals, or could cause damage to the environment.

**This sprayer is recommended for use in spraying non-flammable liquids such as pesticides and water for plants/trees. The sprayer will be damaged and warranty voided if used to apply bleach, chlorine, ice control chemicals, or any petroleum based product (gasoline, diesel, kerosene, oil). The sprayer should not be used to transfer any product intended for human consumption. WE RECOMMEND THAT THE SPRAYER NOT BE USED FOR OTHER PURPOSES ONCE IT HAS BEEN USED FOR SPRAYING PESTICIDES. Any chemical will leave some residual in the tank liner or sprayer components, even after the sprayer has been properly cleaned. These residual chemicals can have unexpected effects on future uses. For example, spraying water or other liquids that are contaminated with residual pesticide may result in unforeseen hazards to plant or animal life. This sprayer should not be used by people with reduced physical, sensory or mental capabilities or lack of experience and knowledge.

Any Questions, Comments, Problems, or Parts Orders

Call Northstar Product Support 1-800-270-0810.

Hazard Signal Word Definitions

	This is the safety alert symbol. It is used to alert you to potential personal injury hazards. Obey all safety messages that follow this symbol to avoid possible injury or death.
⚠DANGER	DANGER (red) indicates an imminently hazardous situation which, if not avoided, will result in death or serious injury.
⚠WARNING	WARNING (orange) indicates a potentially hazardous situation which, if not avoided, could result in death or serious injury.
⚠CAUTION	CAUTION (yellow) indicates a potentially hazardous situation which, if not avoided, may result in minor or moderate injury.
CAUTION	CAUTION (yellow) used without the safety alert symbol indicates a potentially hazardous situation which, if not avoided, may result in property damage. fig01453

Table of Contents

Intended Use 4
Summary of Important Safety Information 5
During Assembly
During Operation
- General Chemical Safety
- Chemical Application Safety
- ATV Vehicle Handling Safety
- Chemical Accident Procedures

Warning Label Location 8
Unpacking
Components 9
Unpacking the Manual Bag 10
Assembly
Step One: Install regulator assembly 11
Step Two: Install handles 12
Step Three: Install gun clips 13
Step Four: Install hose wrap 14
Step Five: Route the hose through gun clips 15
Step Six: Attach sprayer to vehicle 16
Step Seven: Connect remote switch to vehicle battery 17
Step Eight: Check and test completed assembly 18
Machine Components 19
Operation-Important Safety Information 20
Important Safety Information - Operation 21
- General Chemical Safety
- Chemical Application Safety
- ATV Vehicle Handling Safety
- Chemical Accident Procedures

Preparing the Sprayer for Each Use 24
Using the Sprayer
Step One: Assess wind conditions and clear work area 25
Step Two: Fill the sprayer 26
Step Three: Operate the sprayer 27
Step Four: Clean sprayer and decontaminate after use 28
Storage 30
Preparing for storage
Removing from storage
Troubleshooting 31
Specifications 32
Parts Breakdown – Exploded View 33-36
Limited Warranty 37

Intended Use

The sprayer is intended for use in spraying agricultural pesticides.

SPRAYING PESTICIDES:

Pesticides are hazardous chemicals that must be handled with caution as directed throughout this manual and on the pesticide label. Pesticides are regulated by the United States Environmental Protection Agency (EPA) and defined as:

> *Any substance or mixture of substances intended for preventing, destroying, repelling, or mitigating any pest. Though often misunderstood to refer only to insecticides, the term pesticide is a comprehensive term that applies to insecticides, herbicides, fungicides, and various other substances used to control pests.*

The sprayer is intended for use in spraying pesticides in liquid form only. The sprayer is NOT intended for use in spraying pesticides in dry or aerosolized form, or for use with fumigants.

Some formulations of liquid pesticides do not remain in solution and should be agitated to maintain a uniform mix. A ***Pressure regulator/agitator*** is included with this sprayer and should be used when spraying pesticides classified as "flowable" ("F" or "L"), "wettable powder" ("WP" or "W"), "emulsion" ("EC" or "E"), "microencapsulated" ("M"), or water dispersible granules ("WDG" or "DF"). (See pesticide label to determine its classification.)

Sprayers 99919 and 99920 come equipped with a spot spray gun for applying pesticides on selected plants. If you wish to spray large ground areas, an ***ATV mounted broadcast kit*** (Item #99903), a tank mounted broadcast kit (Item #99902) and ***ATV mounted broadcast boom kits*** (Item #99900, 99901) are available as optional accessories.

Sprayer 99918 comes equipped with a spot spray gun for applying pesticides on selected plants. If you wish to spray large ground areas, a ***tank-mounted broadcast kit,*** (Item #99902), ***ATV mounted broadcast kit*** (Item #99903), and ***ATV mounted broadcast boom kit*** (Item #99900) are available as optional accessories.
Note: - A **Nozzle kit** (Item #99914) is required to use ***boom kit*** #99900 with sprayer #99918.

Sprayer 99921 comes equipped with a spot spray gun for applying pesticides on selected plants. If you wish to spray large ground areas, a ***tank mounted broadcast kit,*** (Item #99902) and an ***ATV mounted broadcast kit*** (Item #99903) are available as optional accessories.

SPRAYING OTHER LIQUIDS:

In addition to spraying pesticides, this sprayer may be used for watering plants and trees. **WE RECOMMEND THAT THE SPRAYER NOT BE USED FOR OTHER PURPOSES ONCE IT HAS ALREADY BEEN USED FOR SPRAYING PESTICIDES.** Any chemical will leave some residual in the tank liner or sprayer components, even after the sprayer has been properly cleaned. These residual chemicals can have unexpected effects on future uses. For example, spraying water or other liquids that are contaminated with residual pesticide may result in unforeseen hazards to plant or animal life.
NOTE: The sprayer will be damaged and warranty voided if used to apply bleach, chlorine, ice control chemicals, or any petroleum based product (gasoline, diesel, kerosene, oil).

Summary of Important Safety Information

⚠ WARNING

Read and understand **this owner's manual** completely before using the sprayer. Read each **chemical label's instructions** before handling the chemical.

Improper use of the sprayer or handling of chemicals could result in serious injury or illness for the operator or nearby persons/animals, or cause damage to the environment.

LISTED BELOW is a summary of safety information of particular importance. See individual sections of this owner's manual for more details.

---------- DURING ASSEMBLY ----------

- **EXERCISE CAUTION when attaching remote switch to battery terminals**. Follow the steps listed in the Assembly section of this manual *in exact sequence* when connecting the sprayer's remote switch battery clamps to the battery terminals. *Caution must be exercised to avoid contact with battery acid and to prevent sparking.*
- **CHECK and TEST completed assembly with water** as directed in this manual. Serious injury could result from chemical leaks if sprayer is improperly assembled.
- **DO NOT MODIFY sprayer design.**

----------DURING OPERATION----------

General Chemical Safety

- **READ and FOLLOW each chemical label's instructions and warnings**.
- **AVOID inhaling, ingesting, or coming into contact with any chemicals**.
- **KNOW applicable licensing and regulatory requirements** for the chemical you plan to use.
- **KNOW emergency procedures before handling chemicals.** Carefully review "Chemical Accident Procedures" listed below and later in this manual. Also see First Aid instructions on the chemical label.
- **WEAR protective clothing, eye protection, and chemical resistant gloves** when filling, using and cleaning the sprayer. Wear additional protective gear, such as facemask or apron, as recommended on the chemical label.
- **EXERCISE EXTRA CAUTION around children and pets.** Pesticides are especially toxic to them. Keep sprayer and spray materials away from them at all times.
- **DO NOT MIX OR POUR chemicals in an enclosed, unventilated area**
- **DO NOT USE flammable or corrosive chemicals** in the sprayer.
- **FLUSH the sprayer before switching chemicals** in order to prevent dangerous chemical interactions.
- **STORE pesticides in a correctly labeled container and in a secure location**.
- **MONITOR the health of operators frequently exposed to pesticides**, as recommended by the chemical label or local/federal regulations.

Summary of Important Safety Information

Chemical Application Safety

Before Spraying

- **INSPECT and PREPARE sprayer before each use** as directed in this manual.
- **DO NOT TURN ON POWER to sprayer until ready to spray** in order to avoid unintentional spray release.
- **DO NOT SPRAY when wind speed exceeds 4 MPH** in order to minimize spray drift.
- **CLEAR work area of people/ pets and POST warning notices** to restrict access for the period recommended on chemical label.
- **KEEP sprayer and spray materials away from children/pets**. Pesticides can be especially toxic to children and animals.
- **DO NOT ALLOW anyone younger than 16 to operate sprayer** since pesticides are especially toxic to children.

During Spraying

- **DO NOT OVER-APPLY pesticide**. Apply at rate recommended by chemical manufacturer. Excess pesticide can be dangerous to humans/animals, damage desirable plants, and contaminate soil and water sources.
- **DO NOT EAT, DRINK, SMOKE, RUB YOUR EYES, or TOUCH YOUR BARE SKIN while handling chemicals and spraying**.
- **NEVER POINT THE SPRAY GUN at people or animals.**
- **EXERCISE EXTRA CAUTION when spraying near areas accessible to children and pets**.
- **CLEAN up spills immediately** per instructions on the chemical label.
- **TURN OFF vehicle and set brake or block wheels, TURN OFF power to sprayer, and RELIEVE system pressure** before leaving sprayer unattended.
- **SEE Troubleshooting section of this manual before attempting any repairs**. Wear personal protective equipment and follow safety instructions.

After Spraying

- **CLEAN sprayer immediately after use** according to the directions provided in this manual.
- **DECONTAMINATE yourself after you are** done spraying and have cleaned the sprayer. Wash all exposed areas of the body with soap and water, and remove and launder clothing.
- **DISPOSE OF or STORE remaining chemicals in secure storage with correctly marked container**.

ATV Vehicle Handling Safety

- **DO NOT ALLOW drivers younger than 16** to operate ATV with sprayer attached.
- **EXERCISE SPECIAL CAUTION in ATV vehicle handling and DO NOT exceed 5 MPH.** ATV will be less stable and perform very differently with filled sprayer attached. Exercise particular caution on sloped or rough surfaces to avoid rollover. Use a vehicle equipped with rollover protection for use on non-level terrain.
- **DO NOT RIDE or TRANSPORT cargo on the sprayer.**

Summary of Important Safety Information

Chemical Accident Procedures

Immediate response is necessary in the event of sprayer leaks, bodily chemical contact, poisoning, or spills. See instructions below:

Sprayer leak	**If the sprayer develops a leak, *immediately stop spraying***. Turn off power to the sprayer and follow directions below, as applicable.
Bodily chemical contact	**Personal contamination can occur when chemicals splash, spill, or spray directly onto a person.** 1. Immediately follow First Aid instructions on chemical label. General procedures can include: a) Eyes – immediately flush with water. b) Skin – wash all contaminated skin surfaces with soap and water. c) Clothing – remove contaminated clothing. Dispose of heavily contaminated clothing per chemical label instructions. 2. Seek medical advice if instructed on the label or the victim experiences symptoms of harmful effects. Bring the chemical label for reference.
Poisoning by ingestion or inhalation	**In case of poisoning from ingestion or inhalation**: ***If the victim has collapsed or is not breathing, call 911***. Otherwise: 1. If you are the victim, immediately seek assistance from nearby personnel because you may become incapacitated. 2. Immediately follow first aid instructions on chemical label. 3. Call a poison control center for further advice. **In the U.S., call 1-800-222-1222.** Have the chemical label available for reference.
Chemical spills	**Chemical spills must be quickly contained and properly cleaned up.** Refer to the chemical label for any specific cleanup instructions. General procedures include: 1. **Controlling** the spill by stopping the source of the spill. 2. **Containing** the spill so that it does not spread and get into water sources. 3. **Cleaning up** the spill immediately. 4. **Seeking additional advice** from: - *Chemical manufacturer*. See chemical label for contact information. - *State pesticide regulatory agency*. In the U.S., call the National Pesticide Info. Ctr. at 800-858-7378 for assistance in contacting your state's agency.

Warning Label Location

⚠ WARNING

READ and UNDERSTAND the Owner's Manual completely before using this sprayer. Assemble, test, and use only in accordance with the Owner's Manual instructions.
READ and FOLLOW chemical label instructions. Pesticides are hazardous chemicals, which must be handled carefully.
KNOW emergency procedures BEFORE handling chemicals. Sprayer leaks, bodily chemical contact, poisoning, and spills require immediate response.
AVOID inhaling, ingesting, or coming into contact with any chemicals.
EXERCISE CAUTION in vehicle handling. Vehicle will be less stable and handle very differently with filled sprayer attached.
DO NOT TURN ON POWER to sprayer until ready to spray in order to avoid unintentional spray release.
DO NOT LIFT sprayer unless it is empty.

Improper use of the sprayer or handling of chemicals could result in serious injury or illness to the operator or nearby persons/animals, or could cause damage to the environment.

Replace this label if damaged or destroyed. Consult Owner's Manual for ordering instructions. 777499

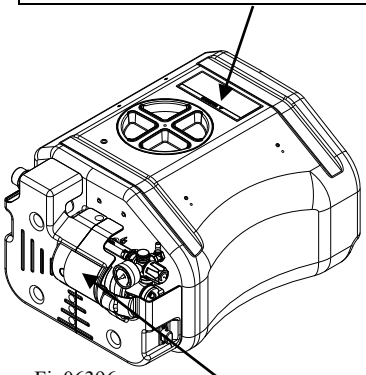

Fig06396



Part#	Description	Model
777499	Chemical Label	All
798892	NSQ Series 11102Q	99918
798890	NSQ Series 2272Q	99919, 99920
798893	NSQ Series 15152Q	99921

Always make sure safety labels are in place and in good condition. If a safety label is missing or not legible, order new labels or unsafe operation could result.
To order replacement safety labels, call NorthStar Product Support at **1-800-270-0810.**

Call 1-800-270

Unpacking

Closely inspect all contents in the shipping carton.

Note that some parts are shipped inside the tank.

- **If you have damaged components:** Contact the freight company that delivered the unit and file a claim.
- **If you have missing components:** Contact NorthStar Product Support at 1-800-270-081.

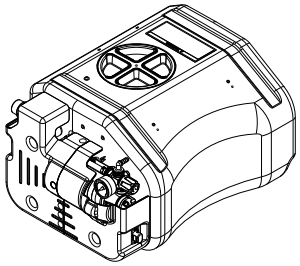

Sprayer

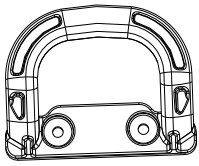

Handle
798525
(Qty 2)

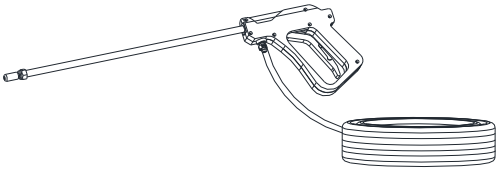

Spray Gun and Hose
(Qty 1)

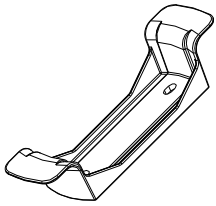

Hose Wrap
798514
(Qty 1)

Unpacking the Manual Bag

The following items are found in the manual bag.

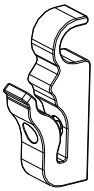

Gun Clip
798480
(Qty 2)

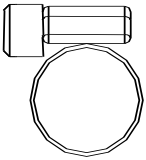

Hose Clamp, 3/8"
30746
(Qty 1)

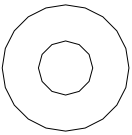

5/16" USS Flat
Washer
82021
(Qty 6)

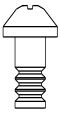

#10-24 x 1/2"
screw
82059
(Qty 2)

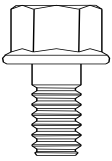

5/16" x 3/4" bolt
82015
(Qty 6)

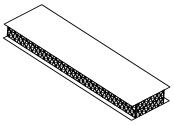

Hook & Loop Set
35363
(Qty 1)

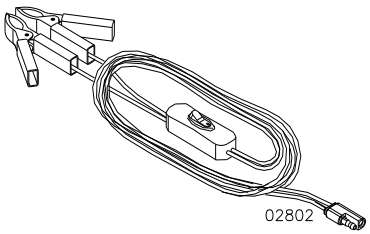

Wire harness w/switch
793521
(Qty 1)

Assembly

Step 1 – Install regulator assembly

- Remove bubble wrap from regulator assembly.
- Slide QC clip open and remove shipping plug from pump outlet port.
- Insert regulator assembly into Outlet port of pump and slide QC clip closed.

NOTE: To insert quick connect fittings, lubricate O-ring with water and twist fitting while inserting into pump port.

Tools Needed

- N/A

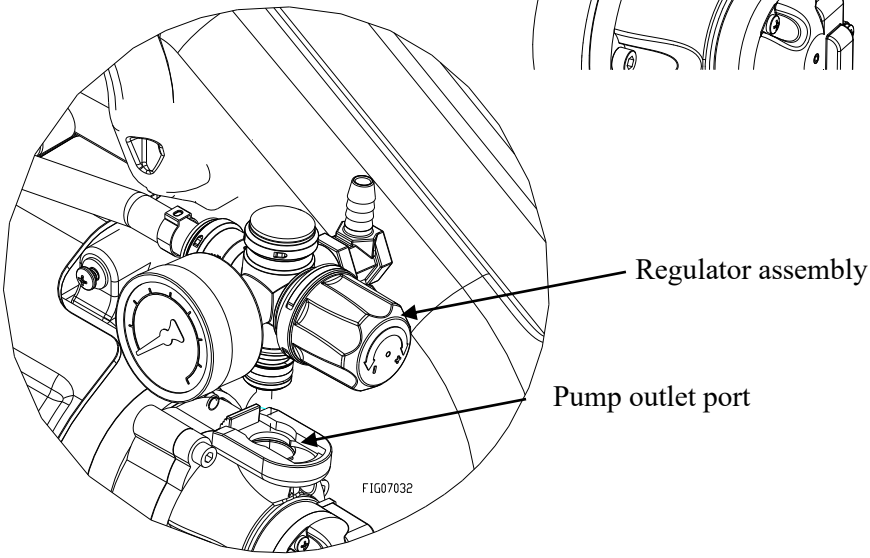

Step 2 – Install handles

- Install both handles to tank.
- Attach with 4 washers and bolts.
- Tighten all bolts 5 Ft-lbs.

Tools Needed

- 1/2" Wrench

Fasteners Needed from Owner's Manual Bag:

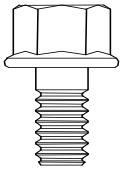

5/16" x 3/4" Bolt
82015
(Qty 4)

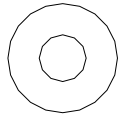

5/16" USS Flat Washer
82021
(Qty 4)

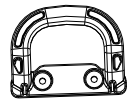

Handle
798525
(Qty 2)

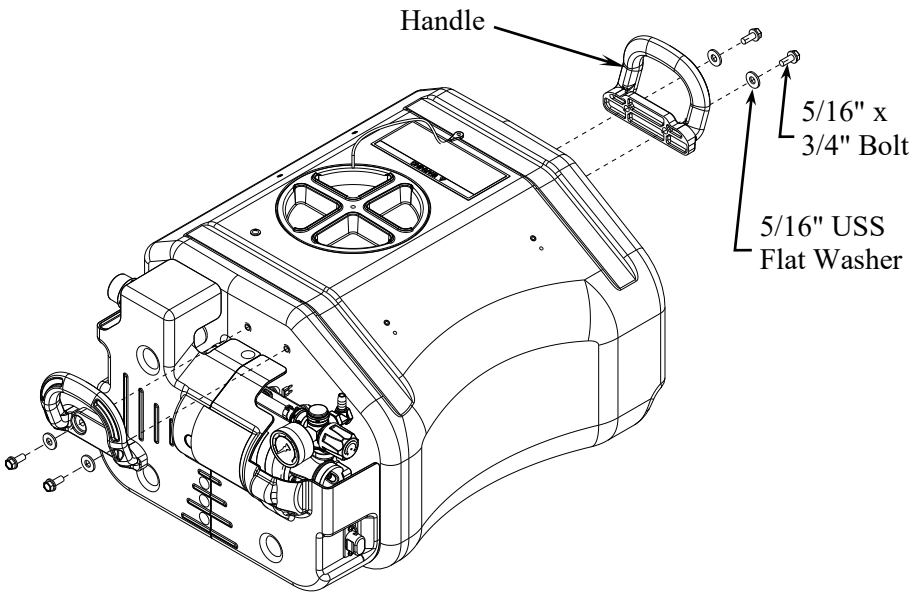

Fig06397

Assembly

Step 3 – Install gun clips

- Install both gun clips to tank.
- Attach with two #10-24 x 1/2" screws.

Tools Needed

- Phillips screw driver

Fasteners Needed from Owner's Manual Bag:

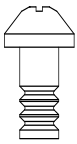

#10-24 x 1/2"
screw
82059
(Qty 2)



Gun Clip
798480
(Qty 2)

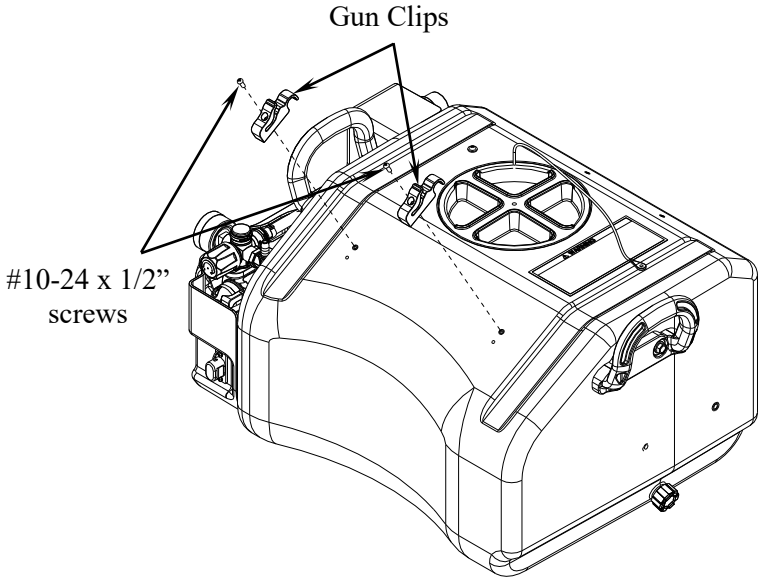

Fig06398

Step 4 – Install hose wrap

- Install hose wrap to one side of tank.
- Attach with 2 washers and bolts.
- Tighten all bolts to 5 Ft-lbs.

Tools Needed

- 1/2" Wrench

Fasteners Needed from Owner's Manual Bag:

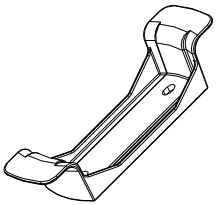

Hose Wrap
798514
(Qty 1)

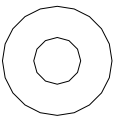

5/16" USS Flat
Washer
82021
(Qty 2)

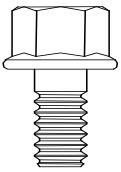

5/16" x 3/4" Bolt
82015
(Qty 2)

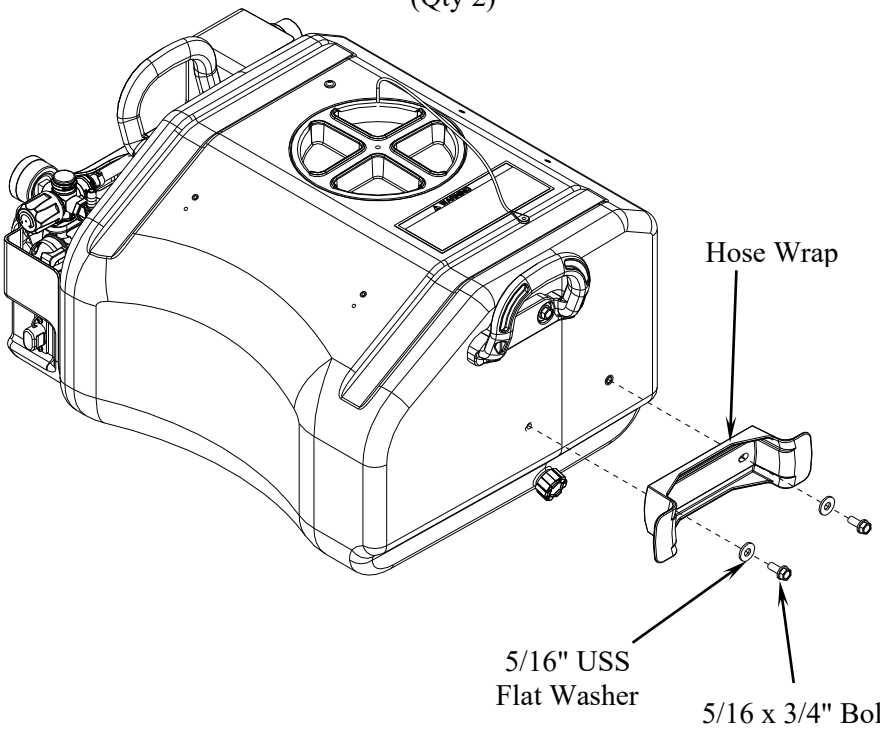

Step 5 – Route the hose through gun clips

- Route gun hose through gun clips.
- Attach gun hose to regulator fitting and tighten hose clamp.

Tools Needed

- Flat head screwdriver

Fasteners Needed from Owner's Manual Bag:

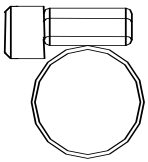

3/8" Hose Clamp
30746
(Qty 1)

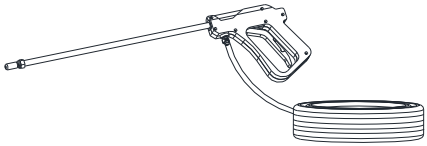

Spray Gun and Hose
(Qty 1)

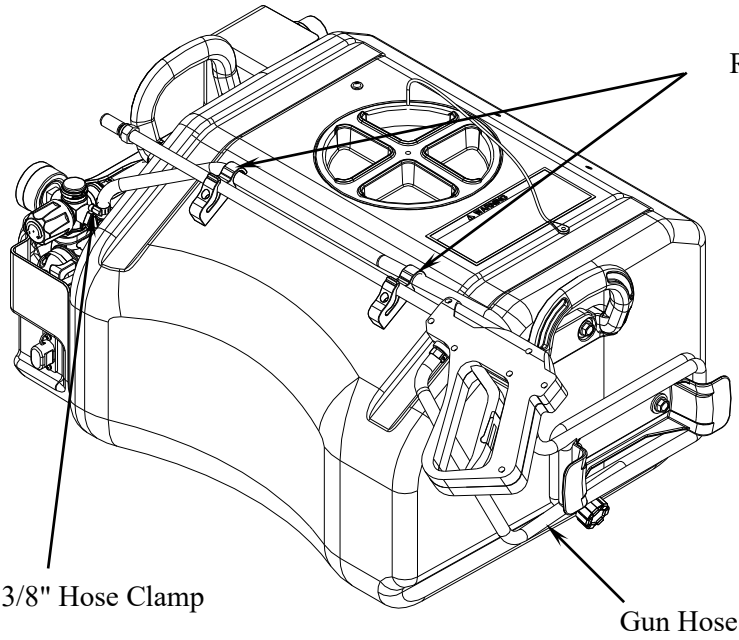

Fig06408

Assembly

Step 6 – Attach sprayer to vehicle

- Secure the sprayer tank to your ATV rack with two tank straps.
- If your vehicle battery will be inaccessible after the sprayer is attached, proceed to step six prior to performing this step.
- **NOTE:** This sprayer does not include tank straps.

Tools Needed

- N/A

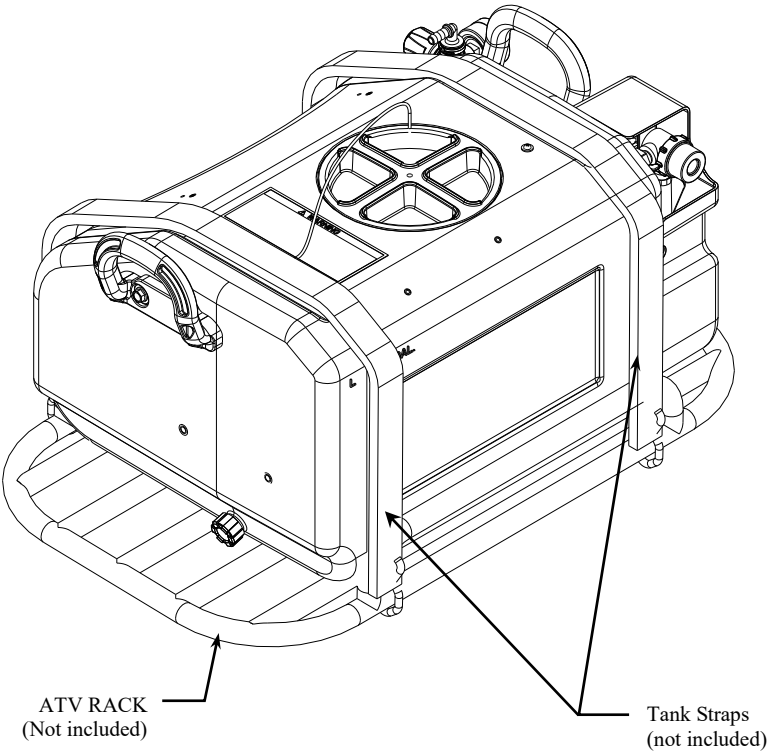

Fig06400

Assembly

Step 7: Connect remote switch to vehicle battery.

⚠ WARNING

Batteries are hazardous because they contain caustic acid, can emit explosive gases, and can cause electric shock.

Caution must be exercised when making connections to a battery to avoid shock and contact with the acid, and to prevent any sparking that could lead to an explosion.

ALWAYS follow the safety instructions and steps listed below *in exact sequence* when connecting the sprayer's remote switch to the battery terminals.

1. Preparatory safety	**Preparatory safety steps:** • ALWAYS use eye protection. • NEVER smoke or work near sparks or other sources of ignition. • NEVER touch both battery terminals at the same time or with any non-insulated tools. • If battery acid contacts skin or clothing, flush immediately with water and neutralize with baking soda.
2. Connect remote switch to battery	**Connect the sprayer's remote switch to the vehicle battery using the following procedure:** a) Disconnect the vehicle battery ground wire. b) Connect the remote switch's ***red*** battery clamp to the ***positive*** **(+)** terminal of the battery. c) Connect the remote switch's ***black*** battery clamp to the ***negative*** **(-)** terminal of the battery. d) Reconnect the vehicle battery ground wire. **WARNING:** Always connect in this sequence to avoid possible shock.
3. Connect remote switch to pump power cord	**Connect the remote switch to the pump power cord:** Note: Make sure the power switch is in the OFF position on the remote switch. 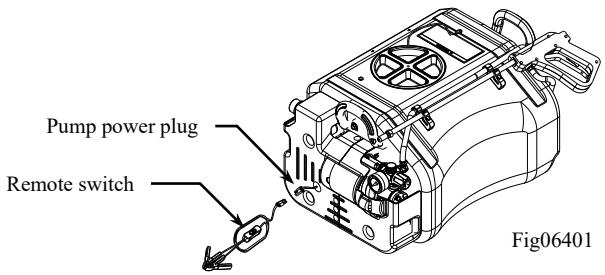 Fig06401
4. Verify connection	**Verify a complete connection has been made** by checking with a DC voltmeter, or by *briefly* turning the remote switch to the ON position and listening for pump activation.
5. Attach remote switch to vehicle	**Using supplied Hook & Loop pad, affix remote switch to vehicle in a position that is easily reached from the driver's seat.**
6. Attach sprayer to vehicle if you haven't yet	**If you have not yet mounted the sprayer to your vehicle, do so at this time** following the instructions in **Step 6: Attach Sprayer to Vehicle**.

7. Disconnect after use	**AFTER EACH USE, disconnect power to the sprayer** by disconnecting the remote switch from the pump power plug – *the remote switch may remain connected to the battery.* *NOTE: It is important to disconnect power to the sprayer when not in use for safety reasons. ALWAYS verify that the power has been disconnected or the remote switch is in the OFF position before adding chemicals or servicing.*
8. To disconnect permanently	**When it is necessary to disconnect the sprayer's remote switch from the battery, use the following procedure:** 1. Disconnect sprayer's pump cord from the remote switch. 2. Disconnect the remote switch from the vehicle battery as follows: a) Disconnect vehicle battery ground wire. b) Disconnect the remote switch's *black* battery clamp from the *negative(-)* terminal of the vehicle battery. c) Disconnect the remote switch's *red* battery clamp from the *positive(+)* terminal of the vehicle battery. d) Reconnect the vehicle battery ground wire. **WARNING:** Always disconnect in this sequence to avoid possible shock. *(Remember that on some vehicle models, you may need to remove the sprayer to access the battery.)*

Step 8: Check and test completed assembly.

⚠ WARNING

Check and test completed assembly

Serious injury could result from chemical leaks if sprayer is improperly assembled or the design of the sprayer is modified.
Follow the steps below to ensure the sprayer is properly assembled. Never modify the sprayer design.

1. Check assembly	**Check assembly to assure the sprayer is properly assembled and in safe working condition:** a) Check that the gun clip screws are tight, hose clamps are secure, and tank straps are properly fastened. b) While it is unlikely that factory-assembled components become loose, they should also be checked to make sure they are tight.
2. Test with water	**Test the system for leaks with water:** a) Fill the tank with water. b) Connect the remote switch to the pump power plug and turn the remote switch ON. The pump is an "on demand" pump. When turned on, the pump will prime itself, then turn off. When the gun trigger is squeezed, the pump will automatically start. c) Operate the spray gun by squeezing the gun trigger. d) Check for leaks throughout the system. If a leak is detected, fix the leak and re-test the system with water until no leaks are detected.

Machine Components (Model 99918, 99919, 99920, 99921)

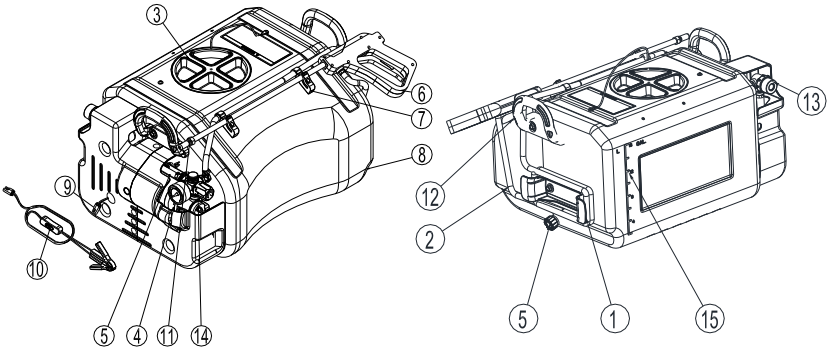

Fig06402

1. **Hose Wrap.** The hose wrap provides a storage location for the gun hose.
2. **Gun Hose.** The gun hose transfers chemical from the pump to the spray gun.
3. **Fill Cap.** The fill cap has a vent to allow air to enter the tank as the chemical is dispensed.
4. **Sprayer Pump.** The sprayer pump makes the chemical flow to the spray gun and out the nozzle.
5. **Drain Cap.** Remove the drain cap to empty the tank. Dispose of or store remaining chemicals properly as recommended on the chemical label.
6. **Spray Gun.** Use the spray gun to apply chemical to specific areas. The spray pattern is adjustable from stream to cone by twisting the spray nozzle (see Operation Instructions). When the remote switch is in the ON position, the spray gun trigger is the pump ON/OFF control. Squeeze the trigger and the pump turns on, let go and the pump turns off.
7. **Gun Clips.** Use the gun clips to store the spot spray gun.
8. **Sprayer Tank.** The sprayer tank holds the chemical.
9. **Pump Power Plug.** Connect the remote switch to the sprayer pump at this location. It should be disconnected when the sprayer is not in use.
10. **Remote Switch.** The remote switch connects the battery to the pump power plug and allows the operator to turn the sprayer pump on and off. The remote switch may be left connected to the battery when the sprayer is not in use.
11. **Spray Nozzle.** Spraying pattern adjusts from stream to cone.
12. **Handles.** Bolt on handles for carrying empty sprayer.
13. **Suction Strainer.** Suction strainer has clear removable bowl for easy cleaning.
14. **Regulator.** This controls system pressure.
15. **Fill marks.** Molded into tank.

Operation – Important Safety Information

Now that you have completed and tested your assembly, there is some important safety and health information you need to know with regard to handling and spraying chemicals, as well as vehicle handling with the sprayer attached.

⚠ WARNING

Carefully read and make sure you understand the following safety information before using the sprayer.

General Chemical Safety:

⚠ WARNING

- Pesticides are hazardous chemicals.
- Heed the warnings below and follow all instructions carefully.
- Improper handling of chemicals can result in serious injury or illness, or cause damage to the environment.

- **Chemical label**. ALWAYS READ and FOLLOW all chemical label instructions.
- **Licensing/regulation**. Refer to any applicable licensing restrictions or state/federal regulations with regard to the application of the particular chemical you plan to use.
- **Emergency procedures**. Before handling chemicals, carefully review the Chemical Accident Procedures listed later in this section, as well as the "Statement of Practical Treatment" on the chemical label.
- **Inhalation/contact**. ALWAYS take precautions to avoid inhaling or coming into contact with the chemical.
- **Personal protective equipment**. ALWAYS wear protective clothing, eye protection, and chemical-resistant gloves when filling, using and cleaning the sprayer. Wear additional protective gear (such as facemask or apron) as recommended on the chemical label.
- **Children/pets**. Pesticides can be especially toxic to children and animals. ALWAYS exercise extra caution around children. Keep sprayer and all spray materials away from children and animals.
- **Ventilation**. ALWAYS ensure there is adequate ventilation when mixing, pouring, or spraying.
- **Flammables**. NEVER use any flammable chemicals in the sprayer.
- **Corrosives**. DO NOT use corrosive chemicals in the sprayer. They can weaken the sprayer and its parts, resulting in leaks. Check with the chemical manufacturer to ensure chemical is compatible with all components of the sprayer.
- **Chemical interaction**. ALWAYS flush the sprayer before switching chemicals. Different chemicals may interact dangerously with each other.
- **Chemical storage**. ALWAYS store pesticides in a properly labeled container and in a secure location per the manufacturer's recommendations.
- **Health monitoring**. Monitor the health of operators who are frequently exposed to pesticides, as recommended by the chemical label or local/federal regulations.

Chemical Application Safety:

⚠ WARNING

- Caution must be used when spraying chemicals to avoid unsafe exposure to humans and the environment.
- Heed the warnings below and follow all instructions carefully.

Before Spraying

- **Sprayer prep**. ALWAYS inspect and prepare the sprayer before use according to the directions provided in this manual.
- **Keep sprayer off**. Do not turn on power to the sprayer until ready to spray in order to avoid unintentional spray release.
- **Wind speed**. NEVER spray when wind speed exceeds 4 MPH in order to minimize spray drift.
- **Clear area/post**. ALWAYS keep the work area clear of people and pets. POST warning notices to restrict access by the public for the period recommended on chemical label.
- **Operator age**. You must be 16 years of age or older to operate this sprayer. Pesticides are especially toxic to children.

During Spraying

- **Over-application**. DO NOT over-apply pesticide. Apply at a rate recommended by chemical manufacturer. Excess pesticide can be dangerous to humans, damage desirable plants, and contaminate soil and water sources.
- **Never point gun**. NEVER point the spray gun at people or animals.
- **Children/pets**. ALWAYS exercise extra caution when spraying near areas accessible to children and pets.
- **Eating/smoking**. DO NOT eat, drink, smoke, rub your eyes, or touch any part of your bare skin while handling chemicals and spraying.
- **Heat/flames**. DO NOT spray near open flames or sources of heat.
- **Spills**. ALWAYS clean up spills immediately per instructions on the chemical label.
- **Unattended**. ALWAYS turn off vehicle and set brake or block wheels, turn off power to sprayer, and relieve system pressure before leaving sprayer unattended.
- **Troubleshooting**. ALWAYS refer to the safety instructions in the Troubleshooting Section before attempting any repairs.

After Spraying

- **Clean sprayer**. ALWAYS clean the sprayer immediately after use according to the directions provided in this manual.
- **Decontaminate**. ALWAYS decontaminate yourself immediately after you are finished spraying and handling chemicals. Wash all exposed areas of the body with soap and water and remove and launder clothing.
- **Chemical disposal/storage**. ALWAYS dispose of or store remaining chemicals properly as recommended on the chemical label.

ATV Vehicle Handling Safety:

⚠ WARNING

Serious injury can occur if the ATV on which the sprayer is mounted is driven unsafely.

- **Driver age.** You must be 16 years of age or older to operate the ATV with the sprayer attached.
- **Less stable**. Be aware that all vehicle handling will be affected with the filled sprayer attached. See your ATV's warning label for the hazards associated with driving:
  - Too fast
  - On paved surfaces
  - On inclines or rough terrain.
- *These hazards will be increased drastically as a result of the additional weight and location of the filled sprayer.* The center of gravity will be higher and weight distribution different, causing the ATV to be less stable when braking, turning, and driving. Exercise extra caution in vehicle handling. Use particular caution on sloped or rough surfaces in order to prevent rollover. A vehicle equipped with Roll Over Protection System (ROPS) is recommended if you will be operating on non-level terrain.
- **Speed limit**. DO NOT exceed 5 mph with sprayer mounted on ATV.
- **Ride/transport**. NEVER ride or transport cargo on the sprayer.

Chemical Accident Procedures:

⚠ WARNING

Before you fill the sprayer, review the following information with regard to handling accidents.

Chemical spills, sprayer leaks, personal contamination, and poisoning are accident situations which you may encounter. **All require an immediate response – See instructions below.**

Sprayer leak	**In the event that the sprayer develops a leak while spraying chemicals, you must *immediately stop spraying*.** Turn off power to the sprayer and follow the directions below, as applicable.
Bodily chemical contact	**Personal contamination can occur when chemicals splash, spill, or spray directly onto a person.** 1. Follow the emergency first aid instructions on the chemical label listed in the "First Aid" or "Statements of Practical Treatment" section. General procedures include: a) Eyes – immediately flush with water or follow other directions as specified on the chemical label. b) Skin – immediately wash all contaminated skin surfaces with soap and water, or follow directions as specified on the chemical label. c) Clothing – remove contaminated clothing immediately. Dispose of heavily contaminated clothing per the instructions on the chemical label for safe chemical/container disposal. 2. Seek medical advice if instructed on the label, or if the victim experiences symptoms of harmful effects such as burning, swelling, nausea, chest pain, difficulty breathing, dizziness or confusion. When seeking medical advice, be sure to bring the chemical product label.

Operation – Important Safety Information (continued)

Poisoning by ingestion or inhalation	**In case of poisoning from ingestion or inhalation**: IF THE VICTIM HAS COLLAPSED OR IS NOT BREATHING, ***CALL 911***. Otherwise: 1. If you are the victim, immediately seek assistance from nearby personnel because you may become incapacitated. 2. Follow the emergency first aid instructions on the chemical label in the "First Aid" or "Statement of Practical Treatment" section. 3. Call a poison control center for further advice. **In the U.S., call 1-800-270-0810 to be automatically linked to the nearest certified poison control center.** Have the chemical label available for reference.
Chemical spills	**Chemical spills must be quickly contained and properly cleaned up.** Refer to the chemical label for any specific cleanup instructions with regard to the chemical spilled. General procedures include: 1. **Control** the spill by stopping the source of the spill. If the source of the spill is a container leak, place the leaking container in a larger, watertight container. Keep unprotected people away from the spill site. 2. **Contain** the spill so that it does not spread and get into water sources. Use a shovel or other tool to make a dike around the spill with soil, sod, or absorbent material. 3. **Clean up** the spill immediately -- Absorbent materials like ground corncobs or pet litter should be spread on the spill area to soak up the pesticide. The contaminated material should then be shoveled into a leak-proof container. Do not flush the spill area with water until you receive advice as directed below. 4. **Seek additional advice** from the chemical manufacturer and your state's pesticide regulatory agency regarding decontamination of the spill site: - *Chemical manufacturer*. The chemical label provides contact information for the chemical manufacturer. - *State pesticide regulatory agency*. In the U.S., call the National Pesticide Information Center at 1-800-858-7378 for assistance in determining how to contact your state's pesticide regulatory agency.

Operation – Preparing the Sprayer for Each Use

If the sprayer has been used previously, it must be prepared BEFORE EACH SUBSEQUENT USE.

⚠ WARNING

- Read instructions below carefully for inspecting and preparing the sprayer.
- Damaged or clogged equipment could result in leaks or uncontrolled spray.
- Leaks could result in injury to the operator or bystanders from chemical exposure, or cause damage to the environment.

Important safety rules:

- **Power off.** Make sure all power is OFF before cleaning, inspecting, or servicing the sprayer.
- **Guards / shields.** Make sure all guards and shields are replaced after servicing the sprayer.
- **Replacement parts.** If a part needs replacement, only use parts that meet the manufacturer's specifications. Replacement parts that do not meet specifications may result in a safety hazard or poor operation of the sprayer.

1. Ensure sprayer attached	**Ensure the sprayer is securely attached to the vehicle.**
2. Ensure tank empty	**Ensure the sprayer has been thoroughly flushed and drained of all residual chemical from prior uses.**
3. Clean suction strainer	**Clean the suction strainer of any chemical residue.** It is important to clean the suction strainer before each use to ensure it is not clogged and to prevent residual chemical from contaminating sprayer contents. a.) USING RUBBER GLOVES, remove clear strainer bowl. b.) Run the screen under fresh water to remove debris. c.) Replace the suction strainer bowl. 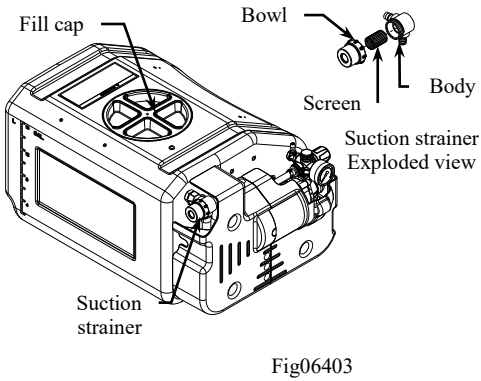 Fig06403
4. Inspect & repair	**Inspect and test the sprayer thoroughly**: a) Inspect hoses for exposed mesh and holes. Replace all worn or damaged hoses. b) Inspect tank and fittings for cracks and leaks. Replace all damaged fittings with original Northstar Product Support parts. c) Check to be sure retaining nut on gun nozzle is tight. d) Check to be sure all other nuts, bolts, and screws are tight. e) Check wheels and tires, if equipped. Make sure wheel lugs are tight and tires are inflated. f) *Partially fill tank with plain water and spray to test for leaks*. Repair as needed. ***IMPORTANT: After any repair work has been done, ALWAYS test for leaks with water one final time before using.***

Operation – Using the Sprayer

Step 1: Assess wind conditions and clear work area.

Before you decide to spray, you must determine whether wind conditions are suitable. You must also restrict access to the work area to ensure the safety of bystanders.

⚠ WARNING

Do not spray if wind speeds are greater than 4 MPH or if there are bystanders in the intended spray area.

1. Assess wind speed	**Assess weather conditions to ensure that it is not too windy to spray.** **DO NOT SPRAY if wind speeds are greater than 4 MPH.** *Visible indication of wind speed*: If leaves are in constant motion or there is any branch movement, DO NOT spray because the wind is too strong.
2. Clear work area	**Clear the work area of all bystanders and pets.** Restrict access by the public for the period recommended on chemical label.

Step Two: Fill the sprayer.

⚠ WARNING

ALWAYS wear personal protective equipment as directed on the chemical label when handling pesticides.
Long pants and sleeves, chemical resistant gloves, and eye protection are strongly recommended.
Additional protective gear may be required depending on the particular pesticide.

Fill the sprayer using the following steps:

1. Review safety information	**Review the Operation – Important Safety Information** related to General Chemical Safety and Chemical Accident Procedures provided in this manual.
2. Choose safe mixing/ loading area	**Choose a safe pesticide mixing and loading area.** - Choose an outdoor, well-ventilated area away from unprotected people, animals, food, and other items that might become contaminated.
3. Wear personal protective equipment	**Wear personal protective equipment as directed on the chemical label.** - Note that additional equipment may be specified for mixing and loading activities.
4. Turn off sprayer and vehicle	**Turn OFF power to the sprayer before filling.** - The vehicle should also be off, with brake set or wheels blocked to prevent unintended movement.
5. Remove fill cap	**Remove the fill cap located on top of the sprayer.**

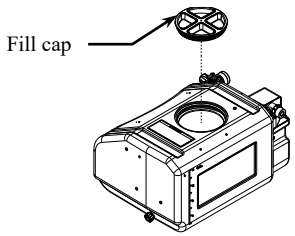

Fig06404

Operation – Using the Sprayer (continued)

6. Ensure tank flushed	**Ensure tank is flushed of all chemicals from prior uses**. - Chemicals can interact dangerously when mixed, and residue chemicals are also a health hazard.
7. Check drain cap	**Before filling tank, ensure drain cap is securely tightened.** 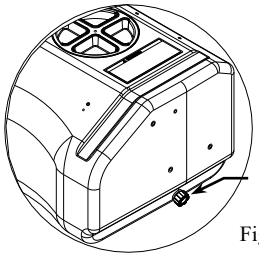 Fig06405
8. Fill tank	**Add pesticide to tank through fill cap:** 1. Confirm the chemical/water dilution ratios specified on the chemical label. 2. Determine chemical and water volumes needed for the planned application, taking into consideration that maximum tank capacity in gallons is 10 for 99918, 16 for 99919, 26 for 99920 and 99921. 3. Add chemical to the tank through the fill cap. *If the chemical is not pre-mixed, add water and pesticide concentrate in the order prescribed on the label.* *<u>Note</u>: Only purchase and mix as much chemical as you need for the planned application in order to minimize chemical over-application and the need for storing unused chemicals.* 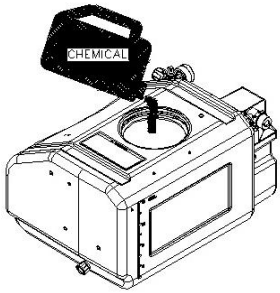 Fig06406
9. Ensure chemical mixed	**Ensure chemical is thoroughly mixed in tank.** - Stirring device should be made of metal or plastic, non-chemical absorbing material, and then properly cleaned and stored after use.
10. Replace fill cap	**Replace fill cap and tighten securely**.

Operation – Using the Sprayer (continued)

Step 3: Operate the sprayer.

⚠ WARNING

- ALWAYS wear personal protective equipment as directed on the chemical label when spraying.
- Long pants and sleeves, chemical-resistant gloves, and eye protection are strongly recommended. Additional protective gear may be required depending on the particular pesticide.

1. Review safety information	**Review the Operation – Important Safety Information** related to Chemical Application Safety and ATV Vehicle Handling Safety provided in this manual.
2. Wear personal protective equipment	**Wear personal protective equipment as directed on the chemical label.**
3. Turn on power	**Turn on the power to the sprayer.** 1. Verify the remote switch is connected to the pump power cord. 2. Turn the remote switch to the "ON" position. *Note: The pump will start automatically when power is turned on. The pump will cycle on and off as needed to retain pressure in the hose.*
4. Squeeze trigger & adjust nozzle	**To spray, squeeze the gun trigger**. **- Twist the spray nozzle to adjust from a straight stream to hollow cone spray pattern**, as recommended on the chemical label for proper delivery rate. *Note: It is not unusual for the operator to be exposed to chemical drips while adjusting the nozzle – gloves should be chemical resistant.* 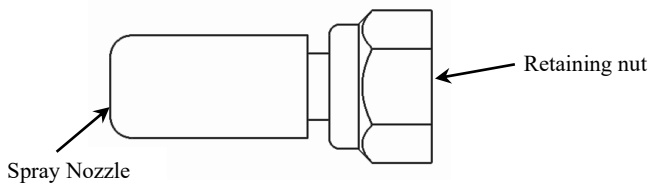
5. Adjust pressure regulator	**Turn pressure regulator knob to adjust outlet pressure** 1. Turn knob clockwise to increase pressure. 2. Turn knob counter-clockwise to decrease pressure *Note: If the pressure regulator knob is completely tightened, the pressure setting will be higher than the pressure switch on the pump. This allows the pump to operate as a demand pump and turn on only when spraying.* 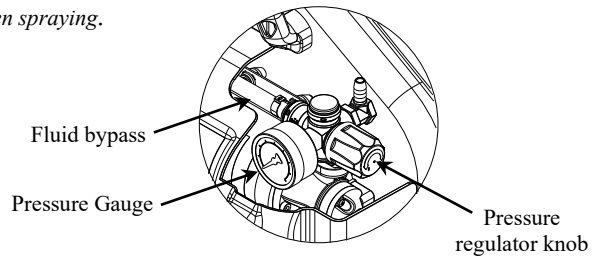

6. Leaving unattended	**If the sprayer must be left unattended at any time**: a) Disconnect power to the sprayer. b) Relieve system pressure by depressing the gun trigger. c) Turn off the vehicle. Set brake or block the wheels.
7. Discontinue use if clogged or inoperative	**If the sprayer becomes clogged or inoperative during use, *discontinue use immediately*.** - DO NOT attempt to service while chemicals are in the sprayer and power is connected. - Return to service area to review instructions for troubleshooting before attempting to service.

Note: *A reserve, clean container capable of holding at least 10 gallons for 99918, 16 gallons for 99919, 26 gallons for 99920 and 99921 should be kept for use when the sprayer tank needs to be emptied temporarily for repairs. It is advisable to purchase a reserve tank suitable for pesticide storage for use in these circumstances. The container should be properly labeled as to its contents if it is used.*

Step 4: Clean sprayer and decontaminate after use.

When done using the sprayer, it is important to clean the sprayer and decontaminate yourself. Do not store the sprayer with chemicals in the tank, as it is unsafe and could also result in damage to the equipment.

⚠ WARNING

- Cleanup and decontamination procedures must be followed after each use.
- Improper equipment cleanup and disposal of chemicals can result in dangerous chemical exposure to humans and the environment, as well as equipment damage.
- Personal decontamination is required after spraying to minimize unsafe exposure to chemicals and potential illness.

1. Drain tank	**If there is excess pesticide left in the tank, drain the tank:** a) Disconnect power to the sprayer and relieve system pressure by depressing the gun trigger. b) Find a suitable container in which to drain the unused pesticide. Place it under the tank drain hole. c) While wearing rubber gloves, eye protection, and all other required personal protective equipment, remove the drain cap and allow pesticide to drain into container. d) When tank stops draining, replace drain cap. Tighten securely.
2. Unused chemical	**Properly store or dispose of unused chemical:** a) <u>If the unused pesticide is to be stored for future use</u>: Store all unused pesticide in its original, or a suitably marked, container in a secure location out of the reach of children & animals. b) <u>If remaining pesticide is to be disposed</u>: Properly dispose of the remaining chemical and its container per the chemical manufacturer's recommendation and according to local hazardous waste disposal regulations.

Operation – Using the Sprayer (continued)

3. Flush sprayer	**Flush the sprayer per the chemical manufacturer's recommendations.** A general procedure is as follows: a) Add fresh water to the tank. b) Reconnect power to the sprayer. c) Operate the spray gun and discharge all rinse water onto an area that can accept dilute pesticide application. d) Add 5 gallons of the chemical manufacturer's recommended cleaning solution. Operate the spray gun, collecting the discharged solution if recommended by the manufacturer. e) After flushing, disconnect power to the sprayer and be sure all system pressure is relieved by squeezing the gun trigger. f) Dispose of cleaning solution discharge as recommended by the manufacturer of the solution.
4. Decontaminate & launder	**Decontaminate yourself after you are finished handling chemicals:** a) Remove all clothing worn during spraying and chemical handling. b) Wash all exposed parts of the body with soap and water. c) Launder clothing separately from other wash.

Storage

When not in use, store the sprayer indoors. For long term or winter storage, prepare the sprayer by running RV antifreeze through the system. This will keep internal parts lubricated, protect against corrosion, and keep the unit from freezing.

CAUTION
• The sprayer will be damaged if it freezes. • Protect the sprayer from freezing during storage by following the instructions below.

Preparing for storage:

1. Add antifreeze	Pour 1/2 gallon of RV antifreeze into the tank. *Note: RV antifreeze is non-toxic and biodegradable and generally safer for the environment than automotive antifreeze.*
2. Spray briefly	Turn on the pump motor and squeeze the gun trigger briefly until fluid sprays. Store gun in lance clips. If equipped, store broadcast lance in stored position to prevent damage.

Removing from storage:

1. Drain	Drain the antifreeze left in the tank through the tank drain hole into a suitable container.
2. Flush with water	Fill the tank with fresh water and run through the system. Operate the spray gun until the system is completely flushed. Be sure to set up containers to capture the antifreeze flush water.
3. Disposal	Dispose of the antifreeze and flush water properly.

Troubleshooting

⚠ WARNING

Before troubleshooting or attempting to service, read the following safety rules to avoid accidental exposure to chemical and also risk of electric shock.

Note: *A reserve, clean container capable of holding at least 10 gallons for 99918, 16 gallons for 99919, 26 gallons for 99920 and 99921 should be kept for use when the sprayer tank needs to be emptied temporarily for repairs. It is advisable to purchase a reserve tank suitable for pesticide storage for use in these circumstances. The container should be properly labeled as to its contents if it is used.*

Before attempting to service the sprayer:

1. Personal protective equipment	**Wear personal protective equipment as directed on the chemical label while servicing your sprayer.**
2. Review troubleshooting table	**Review the Troubleshooting Table below for the type of problem you are experiencing.** However, DO NOT attempt to repair until the steps listed below are followed.
3. Empty and flush	**Empty the tank and flush the sprayer with water as directed in the section, "Operation – Step 4."** *- In order to avoid accidental exposure to chemicals, never attempt to service the sprayer until the tank has been emptied and the sprayer flushed with water.*
4. Disconnect power/relieve pressure	**Disconnect power to the sprayer and be sure all system pressure is relieved by squeezing the gun trigger.**
5. Perform repairs	**Follow the directions provided in the troubleshooting table to repair the sprayer.** *NOTE: Never try to unclog the sprayer nozzle by blowing through it.*
6. Test after servicing	**After servicing, ALWAYS test the sprayer for leaks with plain water before using.**

PROBLEM	CAUSE	SOLUTION
Pump will not turn on	Bad electrical connection	Check battery connections
	Short in wires	Check condition of wires
	Low voltage	Check voltage
Low pressure	Worn spray gun nozzle	Replace spray gun
Low flow	Clogged intake tube	Remove obstruction
	Clogged suction strainer	Clean suction strainer
	Low voltage	Check voltage
Poor spray distribution	Clogged intake tube	Remove obstruction
	Suction strainer clogged	Clean suction strainer
	Worn spray gun nozzle	Replace spray gun
Pump cycles while not spraying	Leak in the system	Tighten leaking hose clamps or fittings, replace spray gun

Specifications

Specifications	Spot Sprayer Model no.	Electrical connection VDC	Max. Amp draw from pump in Amps
Electrical System Requirements	99918	12	6.5
	99919, 99920	12	8
	99921	12	10.5
Sprayer	**Model #**	**Max. GPM [LPM]**	**Max. Pressure in PSI (bar)**
	99918	1.1 [4.2]	100 (6.9)
	99919, 99920	2.2 [8.3]	70 (4.8)
	99921	1.5 [5.7]	150 (10.3)
Tank Maximum Capacity in Gallons (Liters)	99918	10 (38)	
	99919	16 (60)	
	99920, 99921	26 (98)	
Overall Dimensions in Inch (cm)	99918	17.5" x 16.5" x 12" (45cm x 42cm x 30.5cm)	
	99919	20" x 18" x 13.5" (51 cm x 46cm x 34cm)	
	99920, 99921	28" x 18" x 15" (71cm x 46cm x 38cm)	
Dry Weight / Weight full of water in lbs (kgs)	99918	20.3 (9.2) / 102.3 (46.4)	
	99919	23.8 (10.8) / 157.0 (71.2)	
	99920, 99921	31.3 (14.2) / 247.8 (112.4)	

Component Materials*

Tank.....	Polyethylene, EPDM
Suction Tube.....	Polypropylene, PVC, Polycarbonate
Hose.....	PVC
Pump.....	Polypropylene, Viton®, Santoprene®
Regulator.....	Polypropylene, Polyacetal, Viton®
Gun and Nozzle.....	Aluminum, Brass, EPDM, Stainless steel, NBR

* Before using any chemical, check to ensure the chemical is compatible with all materials in the system.

The noise emissions from this product do not exceed 70dB(A).

Note:
The sprayer is not compatible with bleach, chlorine or ice control chemicals. Also, pumping any petroleum based fluid (gasoline, diesel, kerosene, oil) will severely damage the pump.

The manufacturer reserves the right to make improvements in design and/or changes in specifications at any time without incurring any obligation to install them on units previously sold.

Any Questions, Comments, Problems or Parts Orders
Call NorthStar Product Support 1-800-270-0810

Exploded View - 99918, 99919, 99920, 99921 - Rev H.1

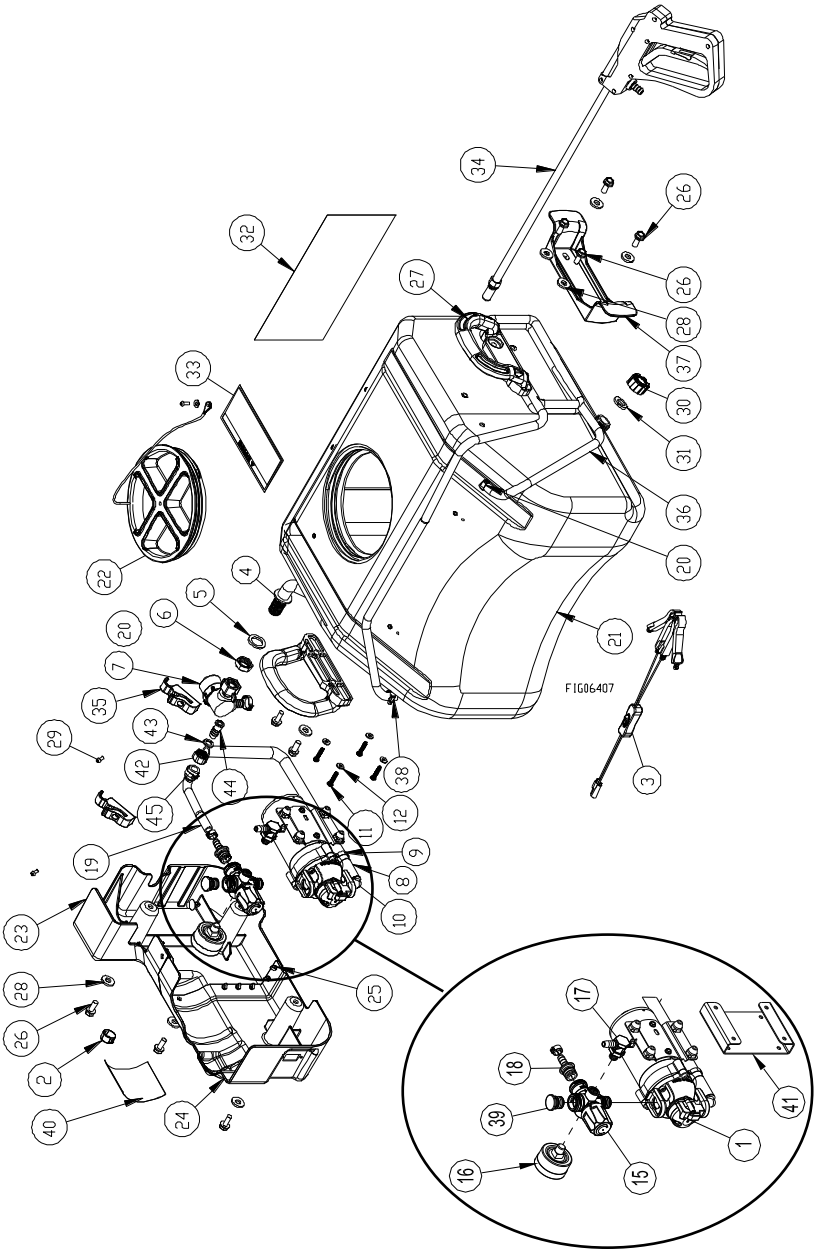

Exploded View - 99918, 99919, 99920, 99921 - Rev H.1

Ref#	Part#	Description	Qty	Model
1	26811102	11102 (1.1gpm QC pump)	1	99918
	2682272	2272 (2.2gpm QC pump)	1	99919/20
	26815152	15152 (1.5gpm high pressure QC pump)	1	99921
2	803877	Snap bushing	1	All
3	793521	Wire harness with switch	1	All
4	798530	Suction tube	1	All
5	798532	Gasket, suction tube	1	All
6	798531	Swivel nut, 1/2" NPS	1	All
7	789882	Strainer	1	All
8	798617	Hose, 1/2" wire rein., 470mm	1	All
9	797792	Hose clamp, 1/2"	2	All
10	787197	Fitting, QC x 1/2" elbow	1	All
11	82061	Screw, #10-24 x 1 1/8"	4	99919/20/21
	82062	#10 x 1.5" screw		99918
12	82068	#10 flat washer	5	All
15	791093	Regulator assembly	1	All
16	791465	Pressure gauge, 0-100, back mount	1	99918/19/20
	799397	Pressure gauge, 0-200, back mount		99921
17	778383	1/4" MPT x 3/8"HB, elbow	1	All
18	787192	QC, 3/8" straight	1	All
19	798650	Hose, bypass	1	99918
	798621		1	99919/20/21
20	784436	Hose clamp, 15.3mm ID	1	All
	797791	Hose clamp, 15.7mm ID (spray gun)	1	All
21	798520	Tank, 10-gallon	1	99918
	798522	Tank, 16-gallon	1	99919
	798524	Tank, 26-gallon	1	99920/21
22	794111	Cap w/ tether	1	All
23	803904	Cover, left	1	99918
	803902		1	99919/ 20/21
24	803905	Cover, right	1	99918
	803903		1	99919/ 20/21
25	798533	Rivet, plastic	6	99918
			7	99919/20/21
26	82015	5/16"-18 x 3/4" Bolt	9	All
27	798525	Handle	2	All
28	82021	5/16" flat washer	9	All
29	82059	#10 x 1/2" screw	3	All
30	37680	Drain cap	1	All
31	5232	Garden hose washer	1	All
32	798647	Billboard label	1	99918
	798620		1	99919
	798626		1	99920 / 21
33	777499	Sprayer warning label	1	All
34	798573	Spray gun w/ nozzle tip	1	99919/20/21
	799022	Nozzle tip, 2.8 orifice		
	799020	Spray gun w/ nozzle tip		99918
	799021	Nozzle tip, 2.0 orifice		
35	798480	Gun clip	2	All
36	793566	3/8" braided PVC hose, 15'	1	99918/19/20
	798877			99921
37	798514	Hose wrap	1	All
38	30746	Hose clamp, 3/8"	1	All
39	789160	QC plug w/ O-ring	1	All
40	798892	Decal, 11102 side cover	1	99918
	798890	Decal, 2272 side cover	1	99919 / 20
	798893	Decal, 15152 side cover	1	99921
41	798574	Pump riser plate	1	99918
42	802368	Nozzle cap	1	All
43	799452	Washer, 11/16" swivel nut seal	1	All
44	798569	1/2" flat seat hose barb	1	All
45	799504	Hose clamp, 17.5mm ID	1	All

Pump Exploded View

26811102

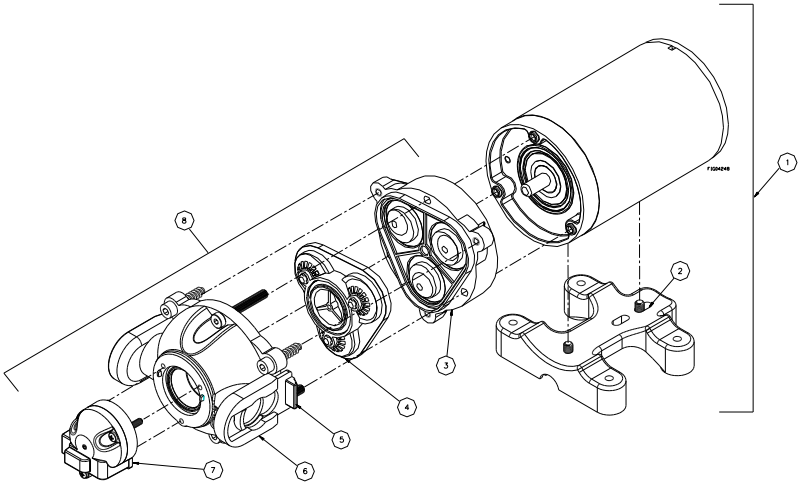

Ref#	Part#	Description	Qty
1	798160	Motor assembly	1
2	798373	Base plate assembly	1
3	798163	Diaphragm assembly	1
4	798797	Valve plate assembly	1
5	798204	Upper housing assembly	1
6	806904	Pressure switch assembly	1
7	804264	Quick connect clip	2
8	A26811102	Complete pump head assembly	1
N/A	787380	Replacement fuse	1

Pump Exploded View

2682272

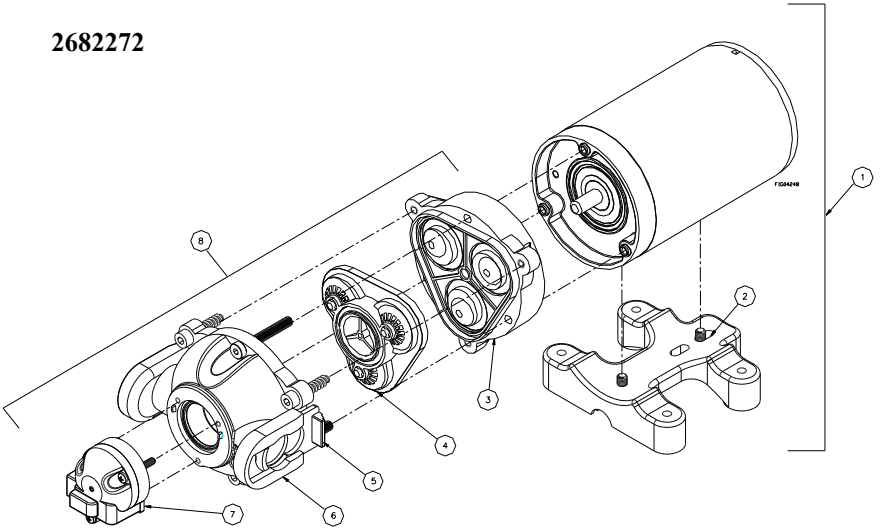

Ref#	Part#	Description	Qty
1	807120	Motor assembly	1
2	800428	Base plate assembly	1
3	807122	Diaphragm assembly	1
4	807123	Valve plate assembly	1
5	784449	Quick connect clip	2
6	807125	Upper housing assembly	1
7	788026	Pressure switch assembly	1
8	A2682272	Complete pump head assembly	1
N/A	787381	Replacement fuse	1

Pump Exploded View

26815152

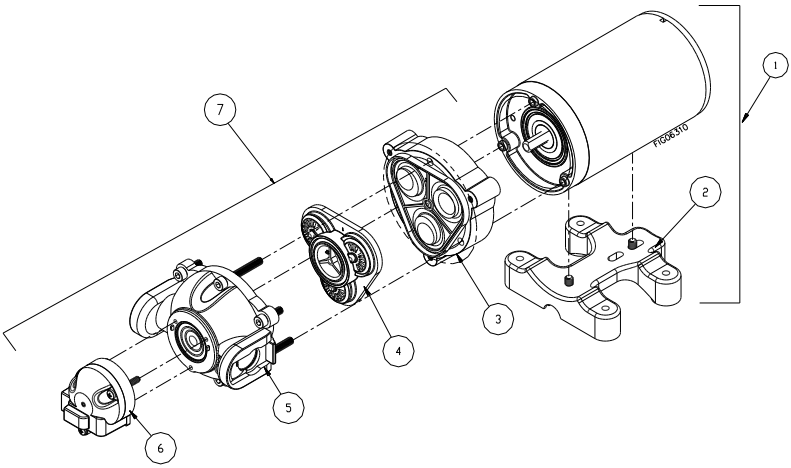

Ref#	Part#	Description	Qty
1	800136	Motor assembly	1
2	800428	Base plate assembly	1
3	797013	Diaphragm assembly	1
4	798397	Valve plate assembly	1
5	797105	Upper housing assembly	1
6	806905	Pressure switch assembly	1
7	A26815152	Complete pump head assembly	1
N/A	787381	Replacement fuse	1

Limited Warranty

Dear Valued Customer:

Use this product properly and enjoy the benefits from its high performance. By purchasing an Northstar Product Support, you show a desire for quality and durability. Like all mechanical equipment this unit requires a due amount of care. Treat this unit like the high quality piece of machinery it is. Neglect and improper handling may impair its performance. Please thoroughly read the instructions and understand the operation before using your product. Always contact Northstar Product Support at 1-800-270-0810 prior to having any service or warranty work performed, as some services performed by parties other than Northstar Product Support approved service centers may void this warranty. This warranty is in lieu of any other warranty expressed or implied and Northstar Product Support assumes no other responsibility or liability outside that expressed within this warranty.

Limited Warranty

Northstar Product Support shall warranty any piece of equipment manufactured, or parts of equipment manufactured, to be free from defects in material or workmanship for a period of:

Northstar Product Support Warranty		
Item #	**Consumer Warranty Period**	**Commercial Warranty Period**
99918 99919 99920 99921	2 years from date of purchase by user	90 days from date of purchase by user

"Consumer use" means personal residential household use by a consumer. "Commercial use" means all other uses, including use for commercial, income producing or rental purposes or when purchased by a business. There is no commercial warranty on this product.

This warranty applies to the original purchaser of the equipment (verification of purchase, in the form of a receipt, is the responsibility of the buyer), is non-transferable, and covers some parts and no labor. Parts will be replaced or repaired at no charge, except when the equipment has failed due to lack of proper maintenance. If a part is no longer available, the part may be replaced with a similar part of equal function. Any misuse, abuse, alteration or improper installation or operations will void warranty. Determining whether a part is to be replaced or repaired is the sole decision of Northstar Product Support. Northstar Product Support will not provide for replacement of complete products due to defective parts. Any costs incurred due to replacement or repair of items outside of an Northstar Product Support approved facility is the responsibility of the buyer and not covered under warranty. Transportation costs to and from service center is the responsibility of the customer.

In addition to the normal warranty, Northstar Product Support shall warrant any normal wear item from defects in material or workmanship for a period of 90 days from the date of purchase by user. Normal wear items include, but are not limited to, pump, hoses, couplers/fittings, tank drain cap, gun, nozzle, on/off switch, decals, wiring, strainer, barbs, tees, fittings, hardware.

This warranty specifically excludes the following; failure of parts due to damage caused by accident, fire, flood, windstorm, acts of God, applications not approved by Northstar Product Support in writing, corrosion caused by chemicals, use of replacement parts which do not conform to manufacturer's specifications, damage related to rodent and/or insect infestation and damage caused by vandalism. Additional exclusions: loss of running time, inconvenience, loss of income, or loss of use, including any implied warranty of merchantability of fitness for a specific use. Also, outdoor equipment needs periodic parts and service to perform well, and this warranty does not cover instances when normal use has exhausted the life of a component.

This warranty does not cover any personal injury or damage to surrounding property caused by failure of any part. Repair or replacement of parts does not extend the warranty period.

Please fill in the following information and have it on hand when you call in on a warranty claim.

Customer Number: _____

Date of Purchase: _____

Northstar Product Support Serial Number: _____

Item Number: _____

This page is intentionally left blank



Northern Tool + Equipment Co., Inc.
Burnsville, MN 55306
www.northerntool.com