M282592N.1

ITEM NUMBER: 282592

SERIAL NUMBER: _____

Owner's Manual

Instructions for Assembly, Testing, Operation, Servicing, and Storage

Tow Behind Sprayers: For outdoor use with non-potable liquids such as agricultural pesticides and other water based liquids**

⚠ WARNING

READ and UNDERSTAND the Owner's Manual completely before using this sprayer. Assemble, test, and use only in accordance with the Owner's Manual instructions.
READ and FOLLOW chemical label instructions. Pesticides are hazardous chemicals.
KNOW emergency procedures BEFORE handling chemicals. Sprayer leaks, bodily chemical contact, poisoning, and spills require immediate response.
AVOID inhaling, ingesting, or coming into contact with any chemicals.
WEAR personal protective gear when filling, using, cleaning, and servicing the sprayer.
KEEP sprayer and spray materials away from children and pets. Pesticides are especially toxic to them.
EXERCISE CAUTION in vehicle handling when towing/hauling a filled sprayer to avoid loss of control or sprayer overturning.
DO NOT TURN ON POWER to sprayer until ready to spray in order to avoid unintentional spray release.
ALWAYS keep a fire extinguisher rated "ABC" nearby.

Improper use of the sprayer or handling of chemicals could result in serious injury or illness to the operator or nearby persons/animals, or could cause damage to the environment.
Only use the cable clamps provided with the sprayer to connect it with the vehicle battery.

** This sprayer is recommended for use in spraying non-flammable liquids such as pesticides and water for plants/trees. The sprayer will be damaged and warranty voided if used to apply bleach, chlorine, ice control chemicals, or any petroleum based product (gasoline, diesel, kerosene, oil). The sprayer should not be used to transfer any product intended for human consumption. WE RECOMMEND THAT THE SPRAYER NOT BE USED FOR OTHER PURPOSES ONCE IT HAS BEEN USED FOR SPRAYING PESTICIDES. Any chemical will leave some residual in the tank liner or sprayer components, even after the sprayer has been properly cleaned. These residual chemicals can have unexpected effects on future uses. For example, spraying water or other liquids that are contaminated with residual pesticide may result in unforeseen hazards to plant or animal life. This sprayer should not be used by people with reduced physical, sensory or mental capabilities or lack of experience and knowledge.

Any Questions, Comments, Problems, or Parts Orders
Call NorthStar Product Support 1-800-270-0810

Hazard Signal Word Definitions

	This is the safety alert symbol. It is used to alert you to potential personal injury hazards. Obey all safety messages that follow this symbol to avoid possible injury or death.
⚠DANGER	DANGER (red) indicates an imminently hazardous situation which, if not avoided, will result in death or serious injury.
⚠WARNING	WARNING (orange) indicates a potentially hazardous situation which, if not avoided, could result in death or serious injury.
⚠CAUTION	CAUTION (yellow) indicates a potentially hazardous situation which, if not avoided, may result in minor or moderate injury.
CAUTION	CAUTION (yellow) used without the safety alert symbol indicates a potentially hazardous situation which, if not avoided, may result in property damage. fig01453

Table of Contents

Intended Use 4
Summary of Important Safety Information 5
Unpacking 10
Unpacking the Manual Bag 12
Unpacking the Manual Bag (Continued) 13
Assembly 14
Machine Components 33
Operation – Important Safety Information 35
Operation – Preparing the Sprayer for Each Use 39
Operation – Using the Sprayer 41
Specifications 48
Exploded View & Parts List – Rev K 50
Exploded View & Parts List Rev K Continued 51
Pump Exploded View 53
Appendix A –Broadcast Spray Calibration Tables 54
Limited Warranty 55

Intended Use

The sprayer is intended for use in spraying agricultural pesticides.

SPRAYING PESTICIDES:

Pesticides are hazardous chemicals that must be handled with caution as directed throughout this manual and on the pesticide label. Pesticides are regulated by the United States Environmental Protection Agency (EPA) and defined as:

> *Any substance or mixture of substances intended for preventing, destroying, repelling, or mitigating any pest. Though often misunderstood to refer only to insecticides, the term pesticide is a comprehensive term that applies to insecticides, herbicides, fungicides, and various other substances used to control pests.*

Sprayer Item # 282592 comes equipped with a spot spray gun and a broadcast boom. Use the spot spray gun if you desire to apply pesticide only on selected plants. Use the broadcast boom if you wish to spray large ground areas.

SPRAYING OTHER LIQUIDS:

In addition to spraying pesticides, this sprayer may be used for watering plants and trees. **WE RECOMMEND THAT THE SPRAYER NOT BE USED FOR OTHER PURPOSES ONCE IT HAS ALREADY BEEN USED FOR SPRAYING PESTICIDES.** Any chemical will leave some residual in the tank liner or sprayer components, even after the sprayer has been properly cleaned. These residual chemicals can have unexpected effects on future uses. For example, spraying water or other liquids that are contaminated with residual pesticide may result in unforeseen hazards to plant or animal life.

NOTE: The sprayer will be damaged and warranty voided if used to apply bleach, chlorine, ice control chemicals, or any petroleum based product (gasoline, diesel, kerosene, oil).

Contact NorthStar Product Support at 1-800-270-0810 for any questions about the appropriate use of the sprayer and/or optional accessories.

Summary of Important Safety Information

⚠ WARNING

Read and understand **this owner's manual** completely before using the sprayer. Read each **chemical label's instructions** before handling the chemical.

Improper use of the sprayer or handling of chemicals could result in serious injury or illness for the operator or nearby persons/animals, or cause damage to the environment.

LISTED BELOW is a summary of safety information of particular importance. See individual sections of this owner's manual for more details.

---------- DURING ASSEMBLY ----------

- **EXERCISE CAUTION when attaching remote switch to battery terminals**. Follow the steps listed in the Assembly section of this manual i*n exact sequence* when connecting the sprayer's remote switch battery clamps to the battery terminals. *Caution must be exercised to avoid contact with battery acid and to prevent sparking.*
- **CHECK and TEST completed assembly** as directed in this manual. Serious injury could result from chemical leaks if sprayer is improperly assembled.
- **DO NOT MODIFY sprayer design.**

---------- DURING OPERATION ----------

General Chemical Safety

- **READ and FOLLOW each chemical label's instructions and warnings**.
- **AVOID inhaling, ingesting, or coming into contact with any chemicals**.
- **KNOW applicable licensing and regulatory requirements** for the chemical you plan to use.
- **KNOW emergency procedures before handling chemicals.** Carefully review "Chemical Accident Procedures" listed below and later in this manual. Also see First Aid instructions on the chemical label.
- **WEAR protective clothing, eye protection, and chemical resistant gloves** when filling, using and cleaning the sprayer. Wear additional protective gear, such as facemask or apron, as recommended on the chemical label.
- **EXERCISE EXTRA CAUTION around children and pets.** Pesticides are especially toxic to them. Keep sprayer and spray materials away from them at all times.
- **DO NOT MIX OR POUR chemicals in an enclosed, unventilated area**
- **DO NOT USE flammable or corrosive chemicals** in the sprayer.
- **FLUSH the sprayer before switching chemicals** in order to prevent dangerous chemical interactions.
- **STORE pesticides in a correctly labeled container and in a secure location**.
- **MONITOR the health of operators frequently exposed to pesticides**, as recommended by the chemical label or local/federal regulations.

Chemical Application Safety

Before Spraying

- **INSPECT and PREPARE sprayer before each use** as directed in this manual.
- **DO NOT TURN ON POWER to sprayer until ready to spray** in order to avoid unintentional spray release.
- **MAKE SURE BROADCAST NOZZLES ARE ORIENTED to spray straight down** before starting the sprayer. An incorrectly positioned broadcast nozzle may spray chemicals on you or others.
- **DO NOT SPRAY when wind speed exceeds 4 MPH** in order to minimize spray drift.
- **CLEAR work area of people/ pets and POST warning notices** to restrict access for the period recommended on chemical label.
- **KEEP sprayer and spray away from children/pets**. Pesticides can be especially toxic to children and animals.
- **DO NOT ALLOW anyone younger than 16 to operate sprayer** since pesticides are especially toxic to children.

During Spraying

- **DO NOT OVERAPPLY pesticide**. Apply at rate recommended by chemical manufacturer. Excess pesticide can be dangerous to humans/animals, damage desirable plants, and contaminate soil and water sources.
- **DO NOT EAT, DRINK, SMOKE, RUB YOUR EYES, or TOUCH YOUR BARE SKIN while handling chemicals and spraying**.
- **NEVER POINT THE SPRAY GUN at people or animals.**

Summary of Important Safety Information (continued)

- **EXERCISE EXTRA CAUTION when spraying near areas accessible to children and pets**.
- **CLEAN up spills immediately** per instructions on the chemical label.

- **TURN OFF vehicle and set brake or block wheels, TURN OFF power to sprayer, and RELIEVE system pressure** before leaving sprayer unattended.
- **SEE Troubleshooting section of this manual before attempting any repairs**. Wear personal protective equipment and follow safety instructions.

After Spraying

- **CLEAN sprayer immediately after use** according to the directions provided in this manual.
- **DECONTAMINATE yourself after you are** done spraying and have cleaned the sprayer. Wash all exposed areas of the body with soap and water, and remove and launder clothing.
- **DISPOSE OF or STORE remaining chemicals in secure storage with correctly marked container**.

Towing/Hauling Safety

- **READ towing/hauling safety instructions** in your towing/hauling vehicle manual.
- **DO NOT ALLOW drivers younger than 16** to operate the towing/hauling vehicle with the filled sprayer attached.
- **MAKE SURE SPRAYER IS SECURELY ATTACHED to vehicle.**
- **EXERCISE CAUTION in vehicle handling when towing/hauling filled sprayer** to avoid loss of control or overturning.
  - **Keep speed to a minimum** so you can maintain control. Reduce speed prior to turns.
  - **Allow for wider turns** and for **more distance to stop**.
  - **Avoid any sudden** steering maneuvers, starts, or stops that could create sway.
- **SLOW DOWN AND EXERCISE EXTRA CAUTION ON SLOPED OR UNEVEN TERRAIN. Pick the most level route possible. Drive up and down slopes when necessary, rather than across. Use a vehicle equipped with a roll over protection system (ROPS) if you will be working on non-level terrain.**
- **BE AWARE of the added length of the sprayer and that visibility may be reduced when making turns or backing up.**
- **DO NOT RIDE or TRANSPORT cargo on the sprayer.**
- **COMPLY WITH all local, state, and federal towing requirements if you will be towing on public roads.**
- **TURN OFF both sprayer and vehicle, and SET BRAKES or BLOCK WHEELS before leaving unattended.**
- **Please fold the boom arms while transporting from one place to another.**

Chemical accident procedures

Immediate response is necessary in the event of sprayer leaks, bodily chemical contact, poisoning, or spills.

Sprayer leak	**If the sprayer develops a leak, *immediately stop spraying***. Turn off power to the sprayer and follow directions below, as applicable.
Bodily chemical contact	**Personal contamination can occur when chemicals splash, spill, or spray directly onto a person.** 1. Immediately follow First Aid instructions on chemical label. General procedures can include: a) Eyes – immediately flush with water. b) Skin – wash all contaminated skin surfaces with soap and water. c) Clothing – remove contaminated clothing. Dispose of heavily contaminated clothing per chemical label instructions. 2. Seek medical advice if instructed on the label or the victim experiences symptoms of harmful effects. Bring the chemical label for reference.

Summary of Important Safety Information (continued)

Poisoning by ingestion or inhalation	**In case of poisoning from ingestion or inhalation**: ***If the victim has collapsed or is not breathing, call 911***. Otherwise: 1. If you are the victim, immediately seek assistance from nearby personnel because you may become incapacitated. 2. Immediately follow first aid instructions on chemical label. 3. Call a poison control center for further advice. **In the U.S., call 1-800-222-1222.** Have the chemical label available for reference.
Chemical spills	**Chemical spills must be quickly contained and properly cleaned up.** Refer to the chemical label for any specific clean-up instructions. General procedures include: 1. **Controlling** the spill by stopping the source of the spill. 2. **Containing** the spill so that it does not spread and get into water sources. 3. **Cleaning up** the spill immediately. 4. **Seeking additional advice** from: - *Chemical manufacturer*. See chemical label for contact information. - *State pesticide regulatory agency*. In the U.S., call the National Pesticide Info. Ctr. at 800-858-7378 for assistance in contacting your state's agency.

Summary of Important Safety Information (continued)

⚠ WARNING

READ and UNDERSTAND the Owner's Manual completely before using this sprayer. Assemble, test, and use only in accordance with the Owner's Manual instructions.

READ and FOLLOW chemical label instructions. Pesticides are hazardous chemicals which must be handled carefully.

KNOW emergency procedures BEFORE handling chemicals. Sprayer leaks, bodily chemical contact, poisoning, and spills require immediate response.

AVOID inhaling, ingesting, or coming into contact with any chemicals.

EXERCISE CAUTION in vehicle handling. Vehicle will be less stable and handle very differently with filled sprayer attached.

DO NOT TURN ON POWER to sprayer until ready to spray in order to avoid unintentional spray release.

Improper use of the sprayer or handling of chemicals could result in serious injury or illness to the operator or nearby persons/animals, or could cause damage to the environment.

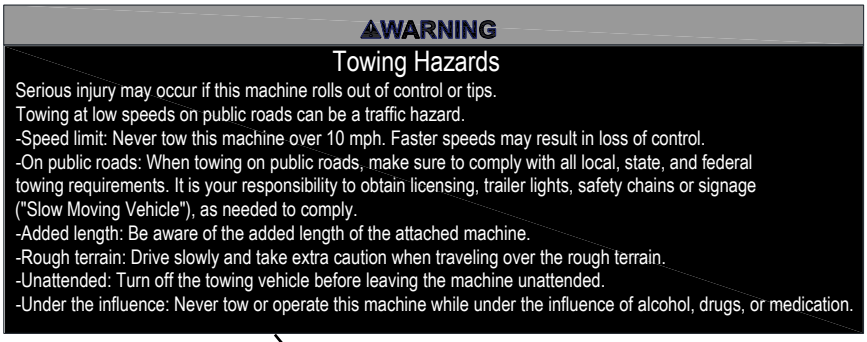

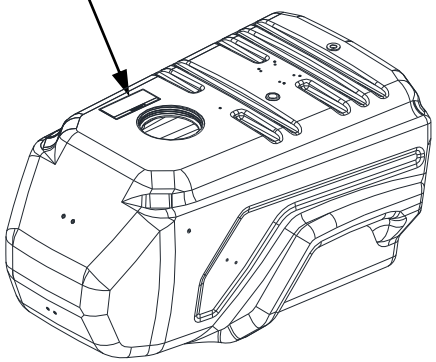

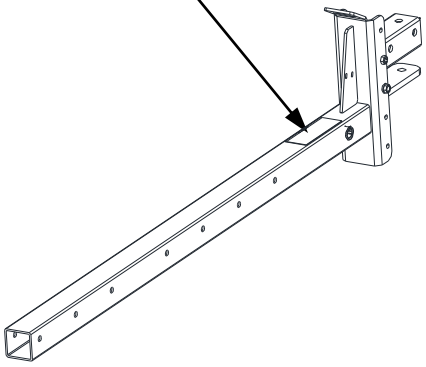



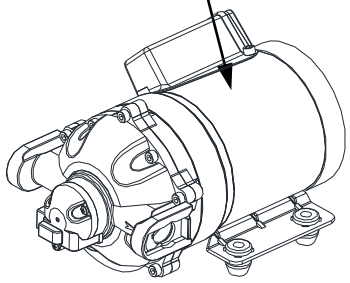

Part#	Description
777499	Chemical Label
788012	NSQ Series 7062Q Pump label
797842	Towing Label

Always make sure safety labels are in place and in good condition. If a safety label is missing or not legible, order new labels or unsafe operation could result.
To order replacement safety labels, call NorthStar Product Support at **1-800-270-0810.**

Summary of Important Safety Information (continued)

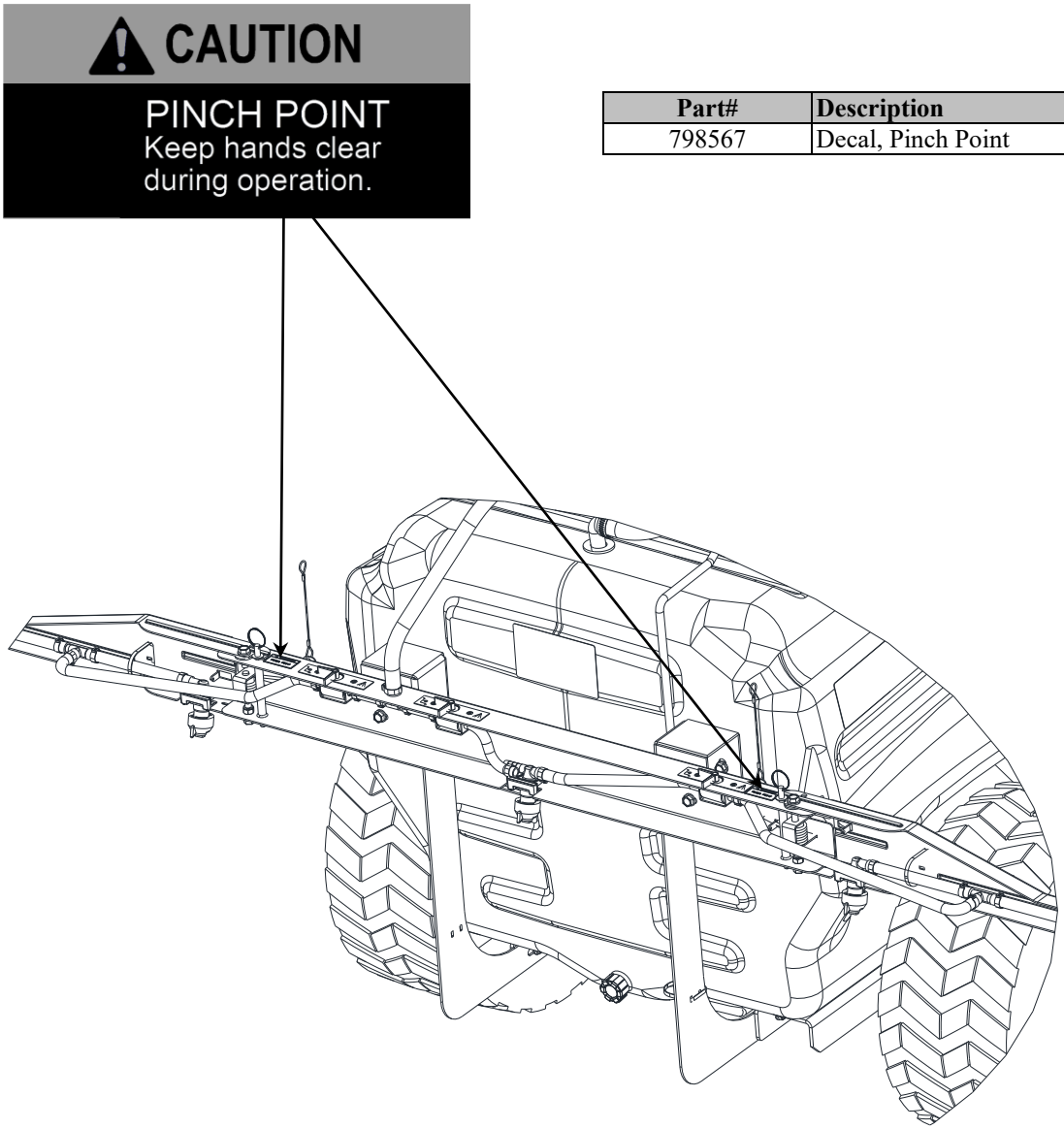

Part#	Description
798567	Decal, Pinch Point

Unpacking

Closely inspect all contents in the shipping carton.

Note that some parts are shipped inside the tank.

- If you have missing or damaged components, please contact NorthStar Product Support at 1-800-270-0810.

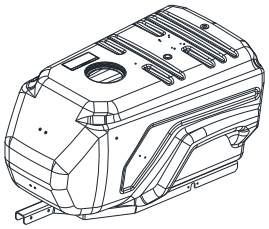

Tank
(Qty 1)

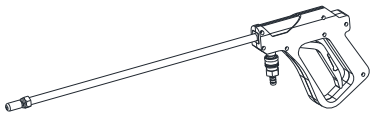

Spray Gun
798573
(Qty 1)

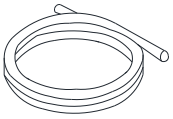

Gun Hose
797705
(Qty 1)

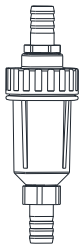

Inlet filter with fittings
(Qty 1)

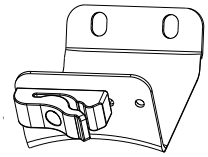

Upper Hose Wrap
798592
(Qty 1)

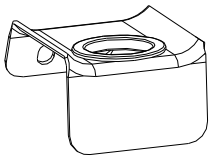

Lower Hose Wrap
792626
(Qty 1)

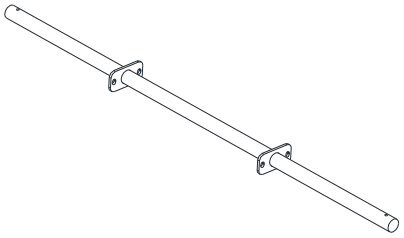

Axle
797910
(Qty 1)

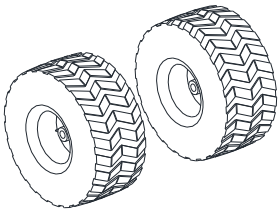

Wheel, 18"
797918
(Qty 2)

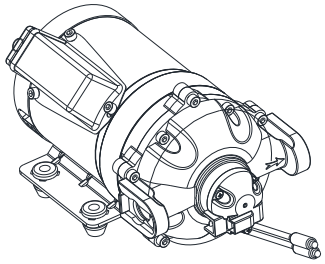

2687062
Pump
(Qty 1)

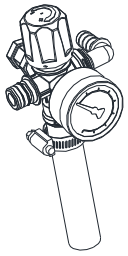

Regulator Assembly
(Qty 1)

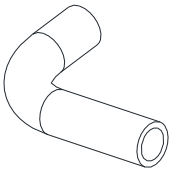

Draw Tube Hose
797916
(Qty 1)

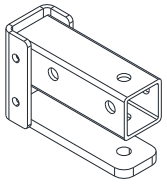

Hitch Mount
797616
(Qty 1)

Unpacking (continued)

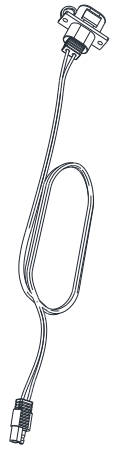

Pump power cord
797914
(Qty 1)

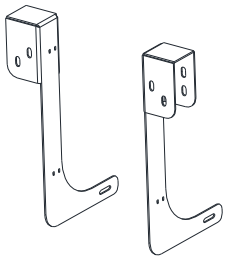

Boom Mounts
L Qty 1 – 797907
R Qty 1 – 797908

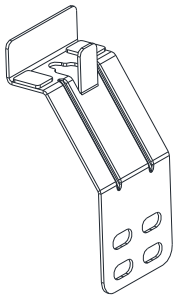

Boom Rest
797909
(Qty 2)



Suction tube
797919
(Qty 1)

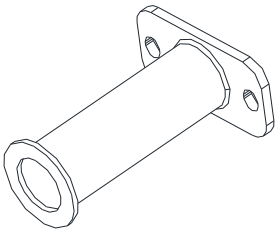

Wheel spacer
797912
(Qty 2)

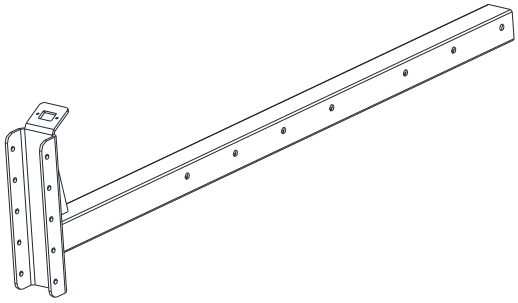

Tow Bar
797905
(Qty 1)

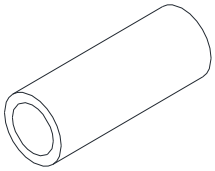

Hose, 3/4" PVC
798172
(Qty 1)

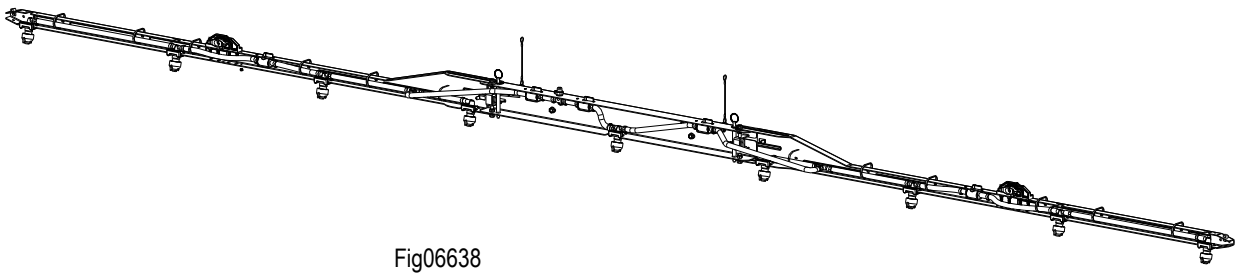

Fig06638

Boom Assembly

Unpacking the Manual Bag

Note: Items in this section are found in the manual bag.

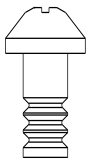

#10-24 x 1/2" Screw
82059
(Qty 2)

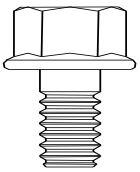

5/16"-18 x 1/2"
Bolt
82014
(Qty 13)



M4 x .7-14 mm Screw
82668
(Qty 2)



Screw, 1/4"-20 x 28mm
82702
(Qty 4)

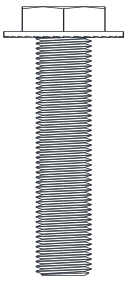

Bolt, 3/8"-16 X 3" HHSF
82695
(Qty 3)

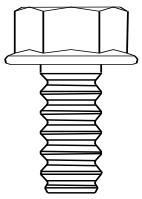

5/16" x 3/4" Bolt
82015
(Qty 12)

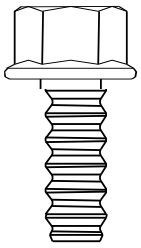

5/16" x 1" Bolt
82016
(Qty 4)



5/16" x 3.5" Bolt
82096
(Qty 1)



M4 x .7 Nut
82669
(Qty 2)

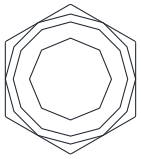

5/16" Nyloc Nut
82020
(Qty 4)

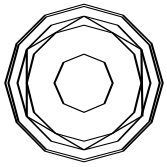

3/8" -16 HHSF Nut
82026
(Qty 3)

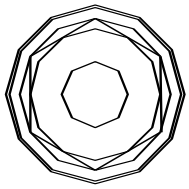

5/16" Nut
82019
(Qty 13)

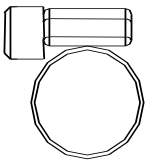

3/8" Hose Clamp
30746
(Qty 4)

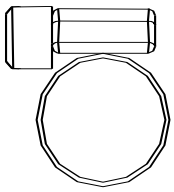

1/2" Hose Clamp
777119
(Qty 1)

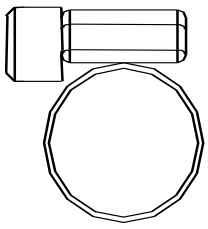

3/4" Hose Clamp
17141
(Qty 4)

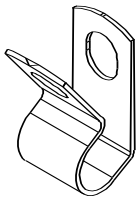

Hose Clip
777110
(Qty 1)

Unpacking the Manual Bag (Continued)

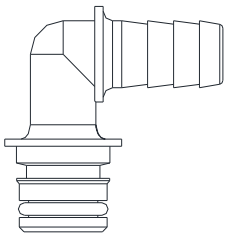

QC, 3/4" Elbow w/ O-ring
787198
(Qty 1)

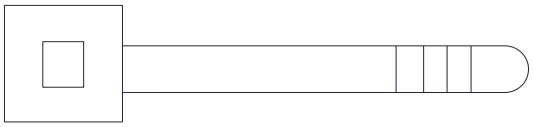

Zip Tie Black
82155
(Qty 5)

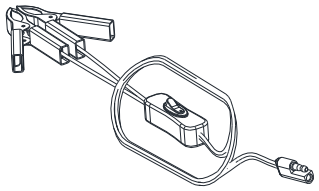

Wire Harness w/
Remote Switch
797599
(Qty 1)

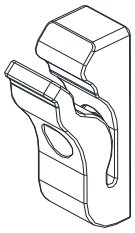

Gun clip
798457
(Qty 2)

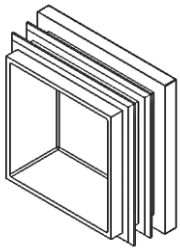

Cap for hitch tube
784531
(Qty 1)

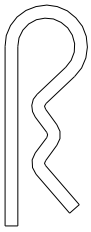

Axle Pin
797815
(Qty 2)

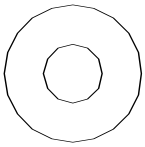

1/4" Flat Washer
82699
(Qty 4)

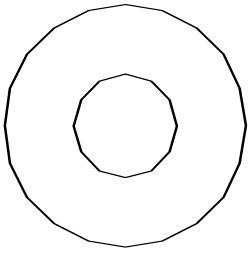

Axle Washer
82684
(Qty 2)

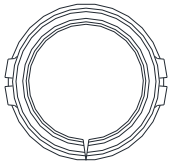

Snap Bushing
798094
(Qty 1)

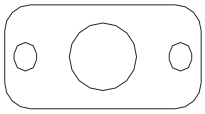

Axle Flange
797545
(Qty 2)

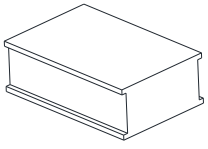

Velcro Set
35363
(Qty 1)

Assembly

Step 1 – Axle to base assembly & wheel spacers

- Install both axle flanges with axle weldment.
- Insert axle weldment into rear slots in cart weldment.
- Attach with 4 bolts and nuts.
- Attach 2 bolts and nuts for each flange
- Slide wheel spacers onto axle.
- Attach with 4 bolts and nuts.
- Tighten all bolts and nuts to 20 Ft-lbs.

Tools Needed

- 1/2" Wrench

Fasteners Needed from Owner's Manual Bag:

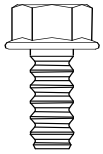

5/16" x 3/4" Bolt
82015
(Qty 4)

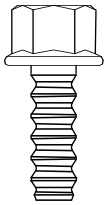

5/16" x 1" Bolt
82016
(Qty 4)

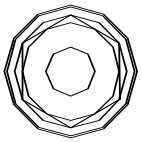

5/16" Nut
82019
(Qty 8)

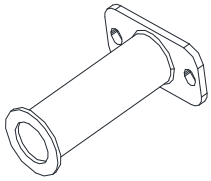

Wheel spacer
797912
(Qty 2)

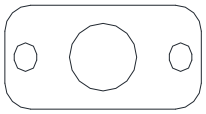

Axle Flange
797545
(Qty 2)



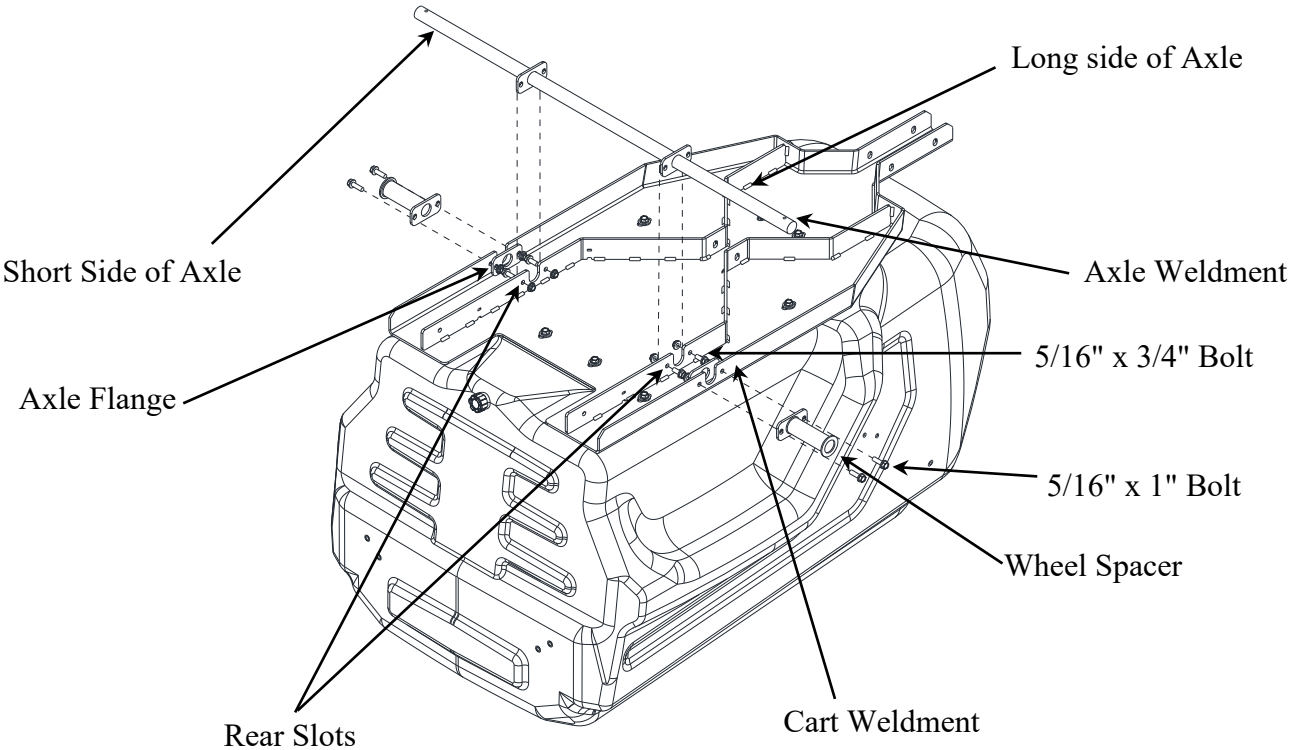

Assembly

Step 2 – Pump power cord & Tow bar assembly

- Install pump power cord through towbar and zip tie at shown locations
- Attach 2-pin connector to tow bar assembly with M4 screws and M4 nuts
- Install snap bushing around cord and push into tow bar hole

Tools Needed

- Phillips head screwdriver
- 7mm wrench

Fasteners Needed from Owner's Manual Bag:



Zip Tie black
82155
(Qty 1)



M4 x .7-14 mm Screw
82668
(Qty 2)

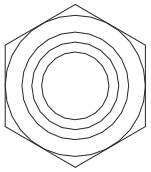

M4 x .7 Nut
82669
(Qty 2)

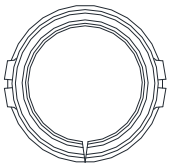

Snap Bushing
798094
(Qty 1)

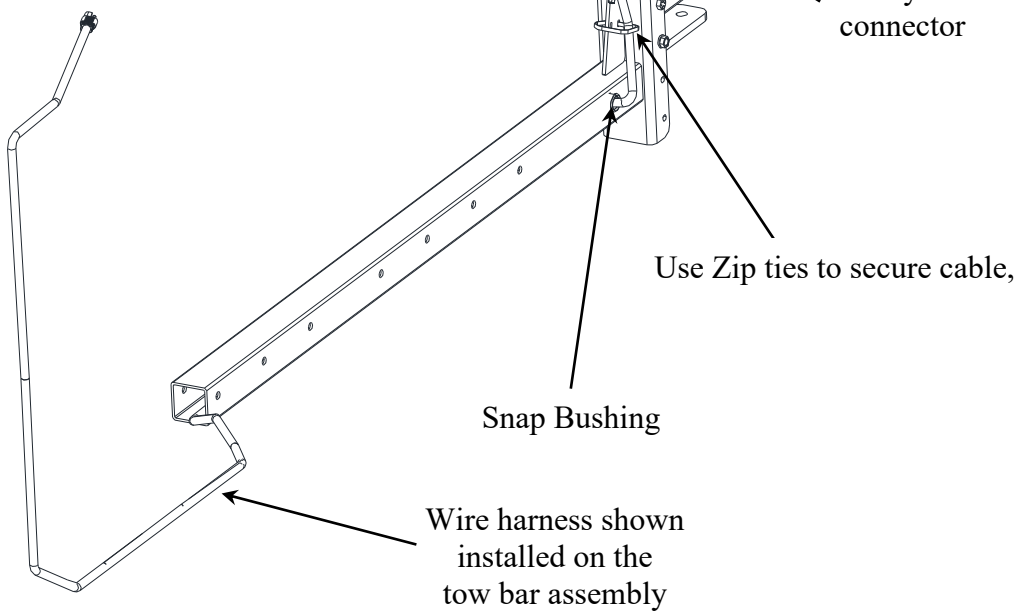

Assembly

Step 3 – Tow bar assembly & hitch mount

- Align holes in tow bar with holes in cart assembly as shown below.
- Install Hitch mount using two 5/16" x 3/4", one 5/16" x 3-1/4" bolts and three 5/16” nuts.
- Insert bolts in orientation shown and secure with nuts.
- Use zip ties to secure cable at shown locations.
- Torque to 20 Ft.-Lbs.

Tools Needed

- 1/2” wrench
- Torque wrench

Fasteners Needed from Owner’s Manual Bag:

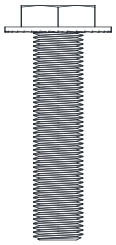

Bolt, 3/8"-16 x 3" HHSF
82695
(Qty 3)

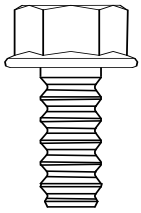

5/16" x 3/4" Bolt
82015
(Qty 2)



5/16" x 3.5" Bolt
82096
(Qty 1)

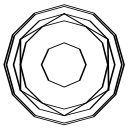

5/16" Nut
82019
(Qty 3)

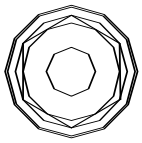

3/8" -16 HHSF Nut
82026
(Qty 3)

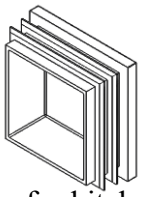

Cap for hitch tube
784531
(Qty 1)

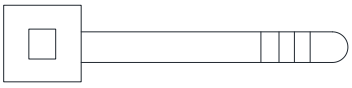

Zip Tie black
82155
(Qty 2)

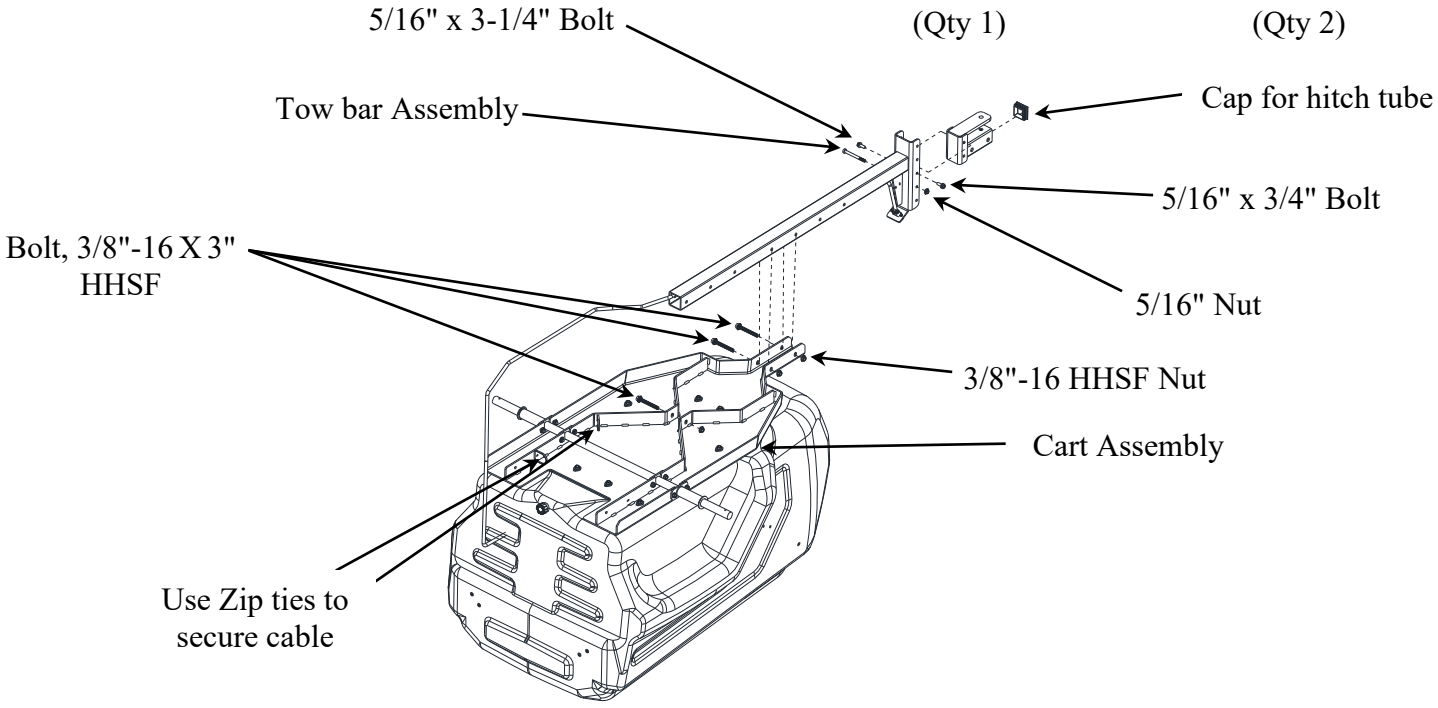

Assembly

Step 4 – Wheel Assembly

- Install wheels onto axle.
- Install axle washer.
- Insert axle pin through hole in axle.
- Note: Check that tires are inflated to the correct pressure.

Tools Needed

- Pliers

Fasteners Needed from Owner's Manual Bag:

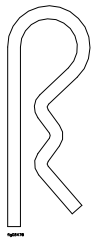

Axle Pin
797815
(Qty 2)

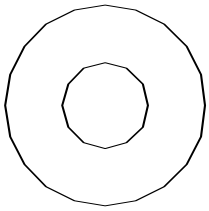

Axle Washer
82684
(Qty 2)

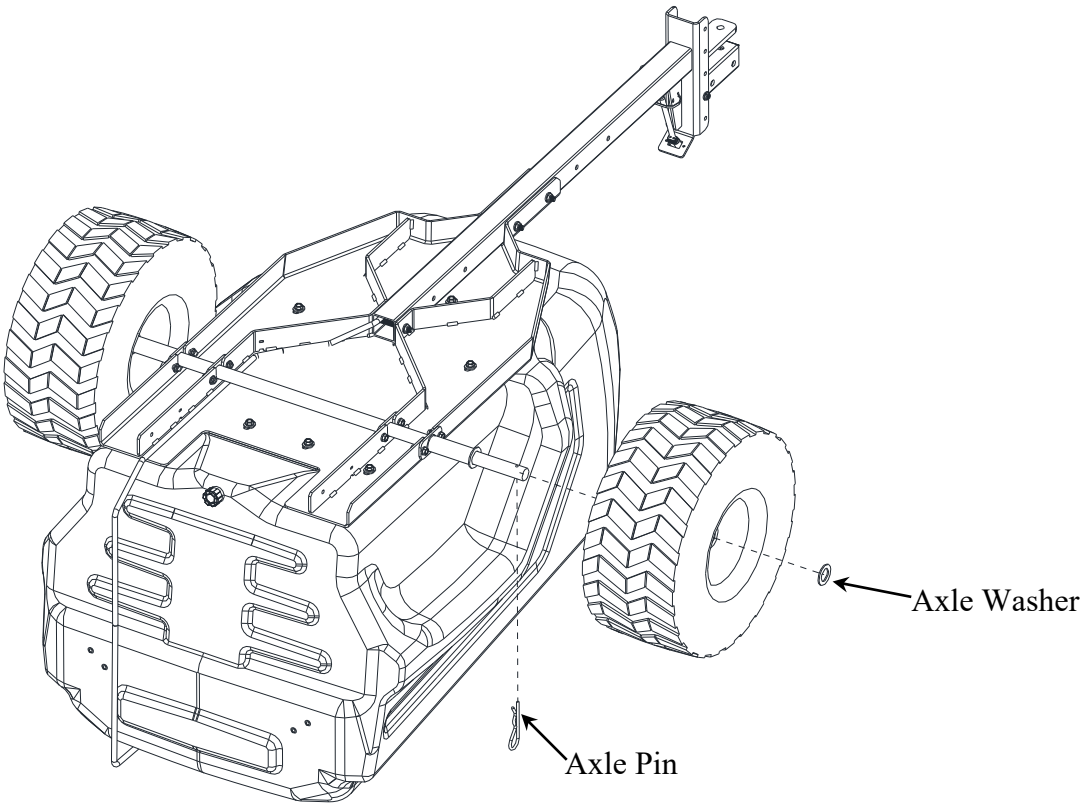

Assembly

Step 5 – Suction tube assembly

- Insert suction tube through grommet near rear of tank.
  Note: wet suction tube with soap and water solution before inserting through grommet to ease installation.

Tools Needed

- N/A

Components Needed from Owner's Manual Bag:



Suction Tube
797919
(Qty 1)

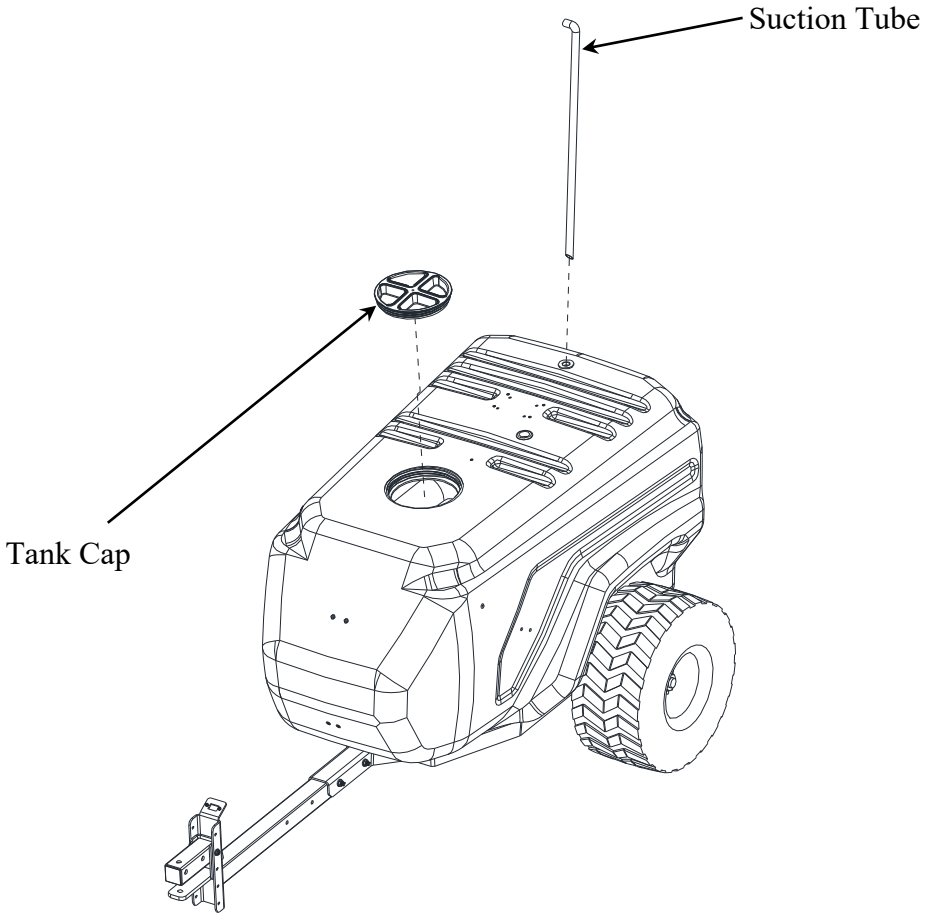

Assembly

Step 6 – Installing Regulator assembly

- Remove shipping plugs from pump ports.
- Insert regulator assembly into *Outlet* port of pump and slide red QC clip closed.
- Insert hose barb fitting into *Inlet* port of pump and slide red QC clip closed.

NOTE: To insert quick connect fittings, lubricate O-ring with water and twist fitting while inserting into pump port.

Tools Needed

- Water

Components Needed from Owner's Manual Bag:

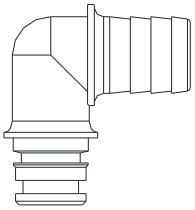

3/4" QC HB Elbow w/ o-ring
787198
(Qty 1)



Regulator Assembly
(Qty 1)

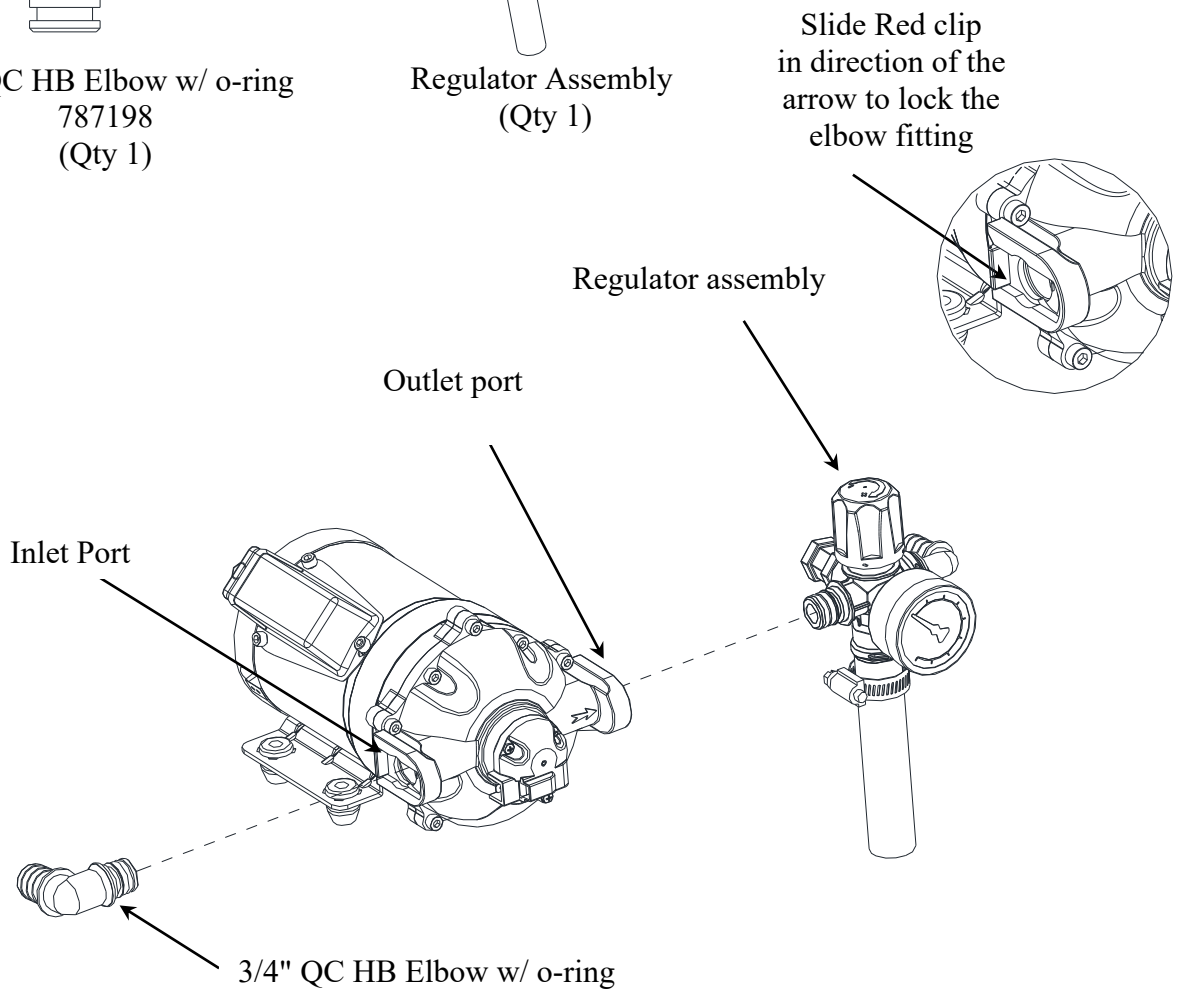

Assembly

Step 7 – Pump to Tank assembly

- Apply soap to bypass hose on regulator.
- Press bypass hose into the grommet.
- Install (4) screws through (4) washers and pump feet and into threaded holes in tank until tight.
  Note: damage to rubber pump feet could occur if screws are over-tightened.

Tools Needed

- Phillips head screwdriver

Fasteners Needed from Owner's Manual Bag:



Screw, 1/4"-20 x 28mm
82702
(Qty 4)

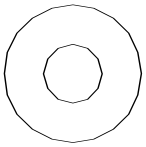

1/4" Flat Washer
82699
(Qty 4)

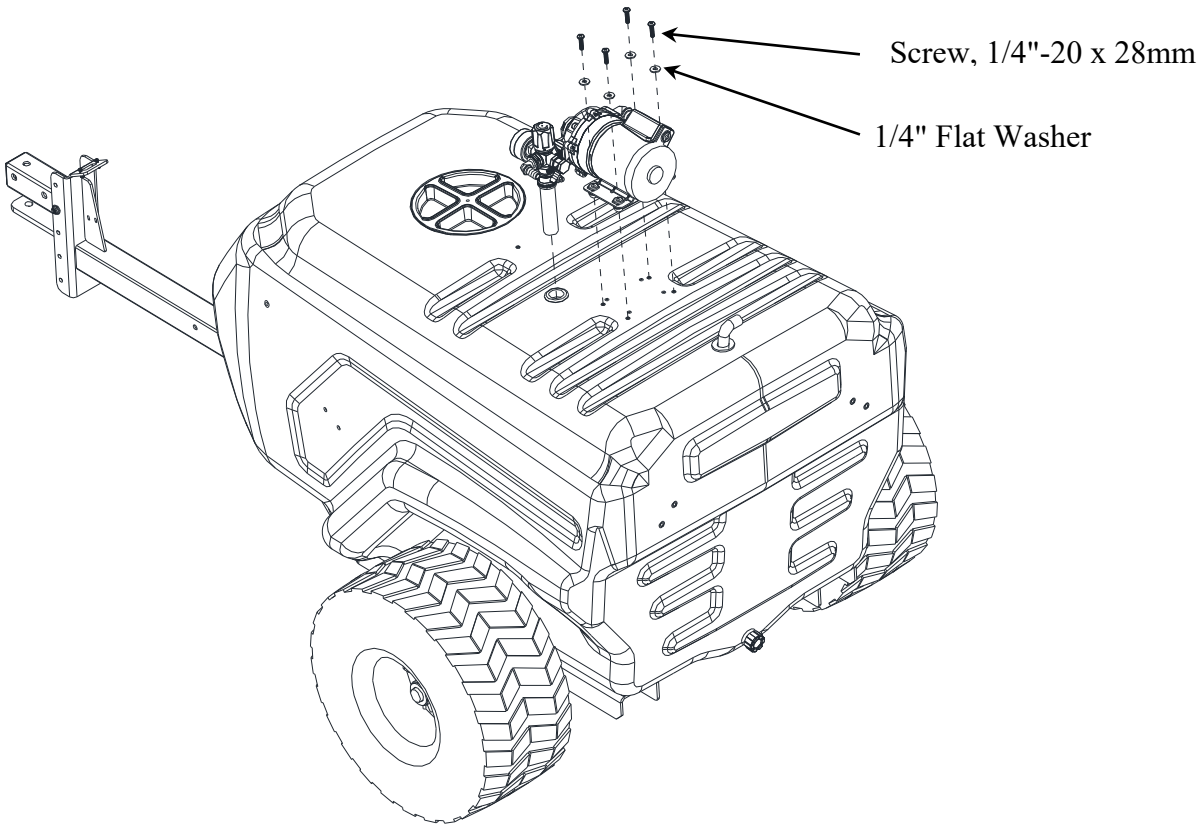

Assembly

Step 8 – Draw tube & Inlet filter hose assembly

- Slide hose clamps over both ends of draw tube hose.
- Slide short end of hose over hose barb elbow fitting located on the pump inlet.
- Slide fittings and inlet filter from short end hose
- Secure both ends with hose clamps until tight.

Tools Needed

- Flat head screwdriver

Components Needed from Owner's Manual Bag:

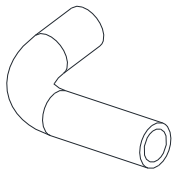

Draw Tube Hose
797916
(Qty 1)

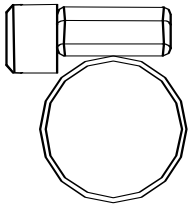

3/4" Hose Clamp
17141
(Qty 4)

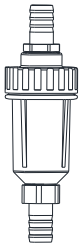

Inlet filter with fittings
(Qty 1)

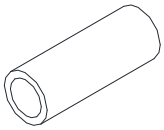

Hose, 3/4" PVC
798172
(Qty 1)

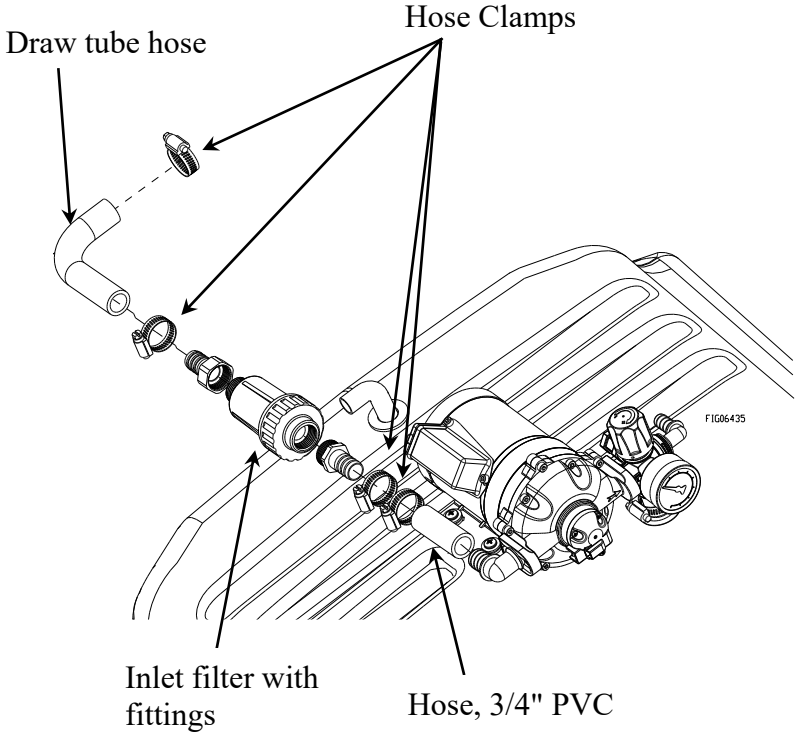

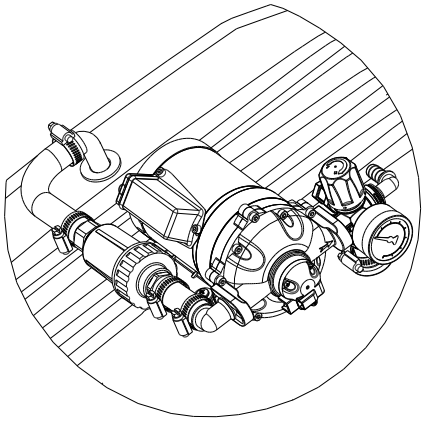

Detailed view
Assembly position

Assembly

Step 9 – Boom mounts (left & right) to tank

- Insert 5/16" x 1/2" bolts through boom mount bracket slots and into threaded inserts in the tank. Torque to 5 Ft.-Lbs.
- Insert 5/16" x 3/4" bolts through cart slots and boom mount bracket slots, Secure with 5/16" Nuts.

Tools Needed

- 1/2" wrench
- Torque wrench

Fasteners Needed from Owner's Manual Bag:

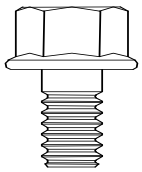

5/16" x 1/2" Bolt
82014
(Qty 4)

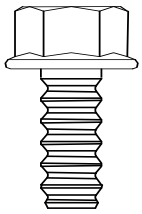

5/16" x 3/4" Bolt
82015
(Qty 2)

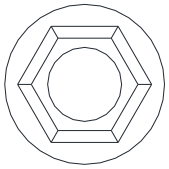

5/16" Nut
82019
(Qty 2)

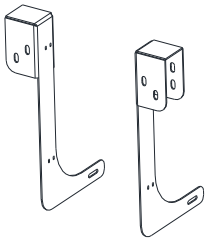

Boom Mounts
L Qty 1 – 797907
R Qty 1 – 797908

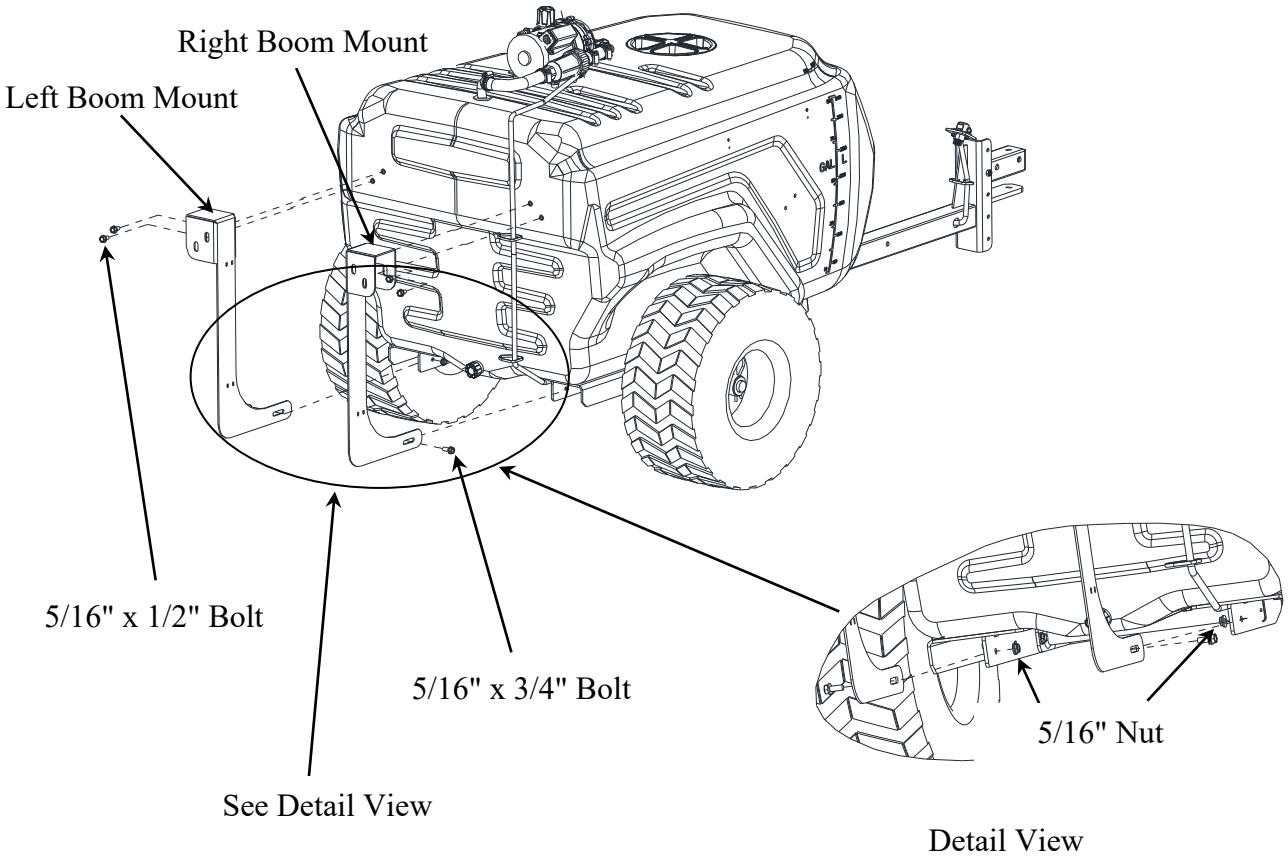

Step 10 – Finish Installation of Pump Power Cord from Step 3.

- Route up boom mount and connect to pump
- Secure to boom brackets with zip-ties

Tools Needed

N/A



Pump power cord
797914
(Qty 1)



Zip Tie Black
82155
(Qty 2)

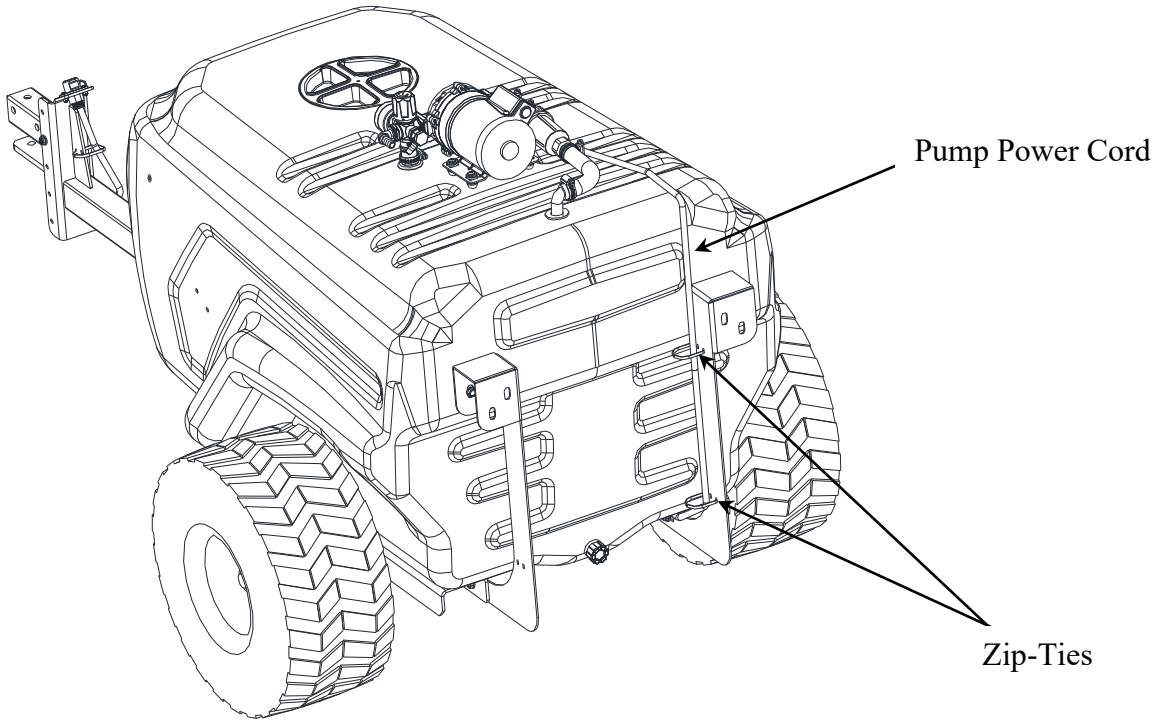

Assembly

Step 11 – Boom assembly to boom mounts, 1/2" boom hose to regulator

- Insert 5/16" x 3/4" bolts through boom center part slots and into boom mount bracket slots, install 5/16" Nylocs to the bolts on boom mount bracket.
- Slide hose clamp over hose.
- Install hose onto hose barb on regulator assembly. Secure with hose clamp until tight.

Tools Needed

- 1/2” wrench

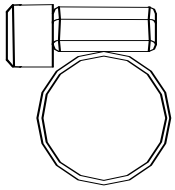

1/2" Hose Clamp
777119
(Qty 1)

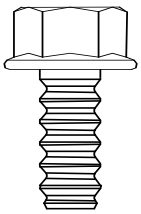

5/16" x 3/4" Bolt
82015
(Qty 4)

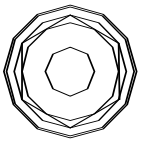

5/16" Nyloc Nut
82020
(Qty 4)

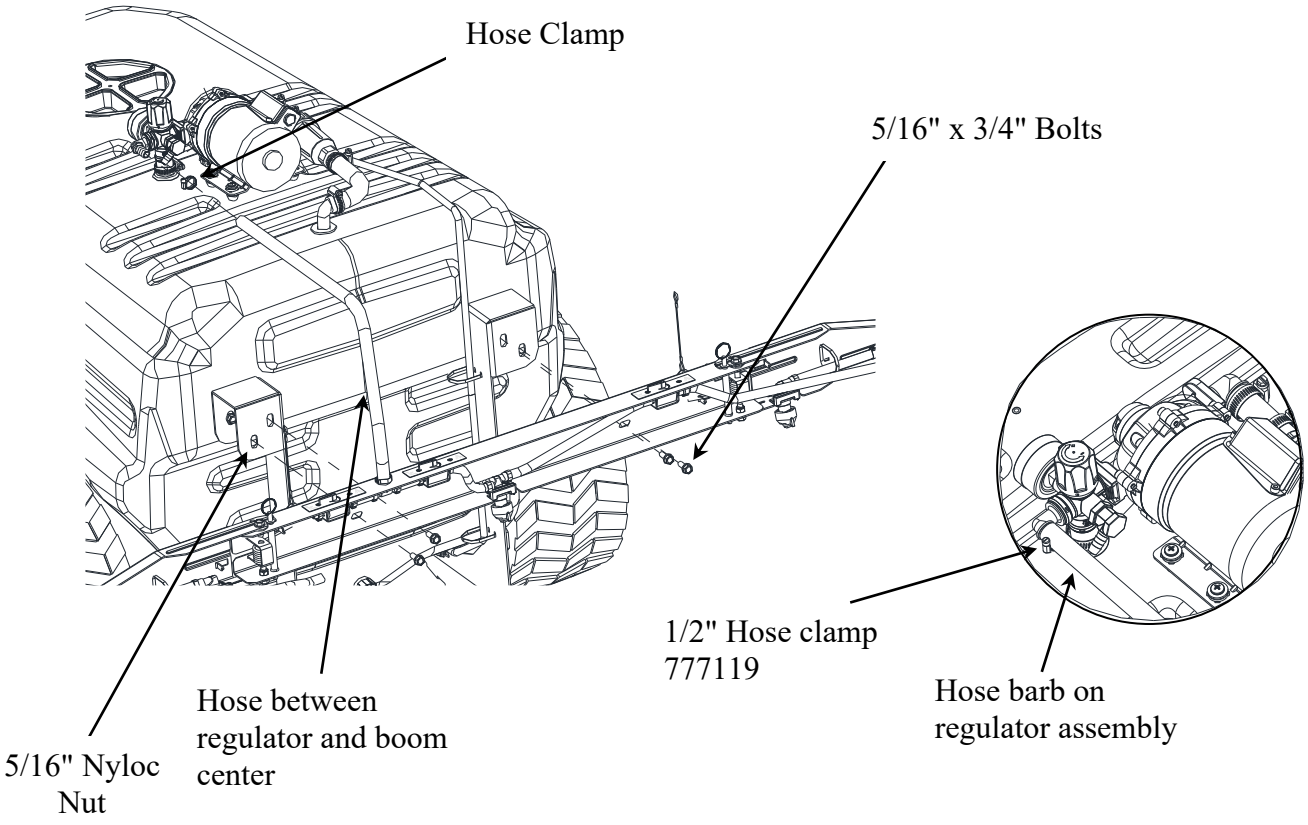

Assembly

Step 12 – Boom rest brackets to tank

- Insert 5/16" x 1/2" bolts through boom hold bracket slots and into threaded inserts in the tank. Torque to 5 Ft.-Lbs.
- Note: Check alignment with boom arm locking feature, adjust boom rest position if necessary

Tools Needed

- 1/2" wrench
- Torque wrench

Fasteners Needed from Owner's Manual Bag:

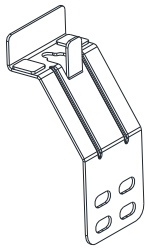

Boom Rest
797909
(Qty 2)

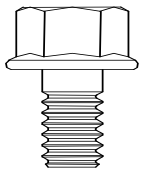

5/16"-18 x 1/2" Bolt
82014
(Qty 4)

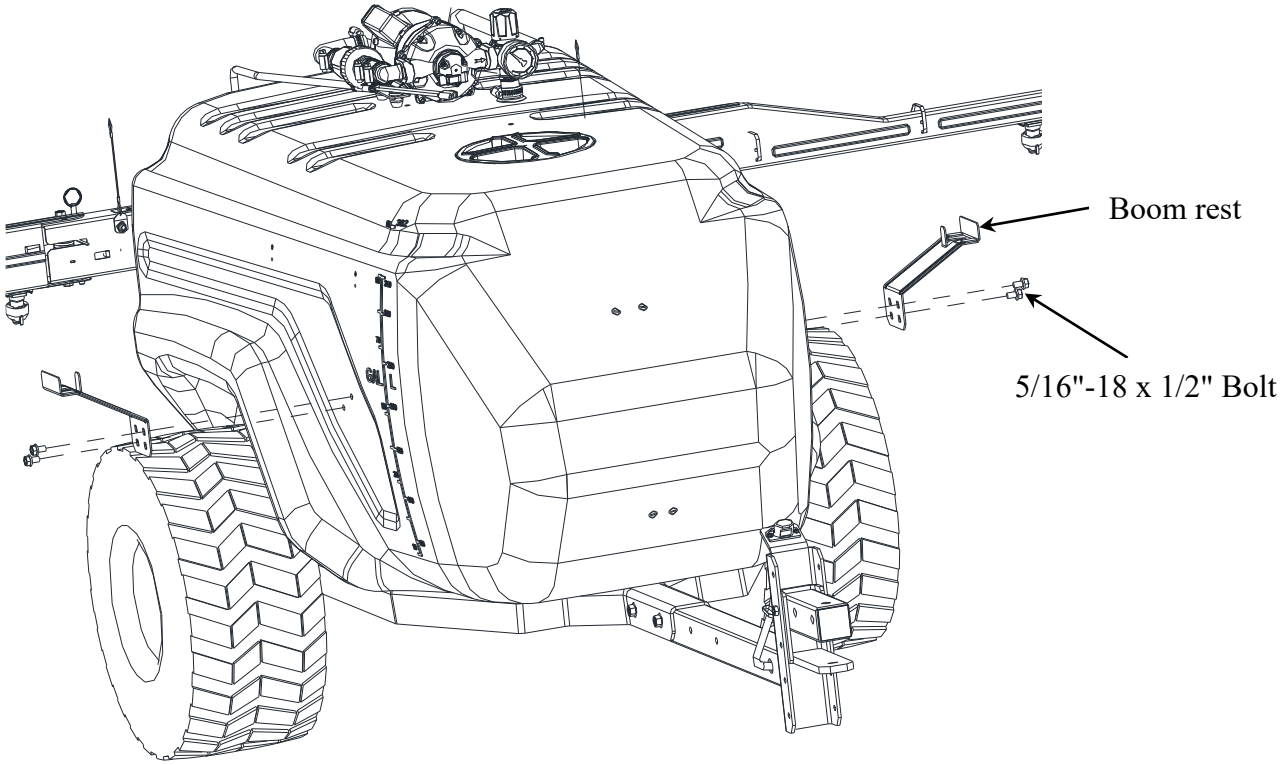

Assembly

Step 13 – Hose wraps to tank

- Align upper and lower hose wrap brackets with inserts in tank.
- Insert bolts and torque to 5 Ft.-Lbs.

Tools Needed

- 1/2" wrench
- Torque wrench

Fasteners Needed from Owner's Manual Bag:

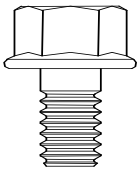

5/16"-18 x 1/2" Bolt
82014
(Qty 4)

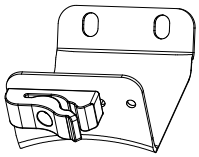

Upper Hose Wrap
798592
(Qty 1)

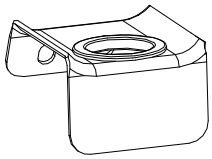

Lower Hose Wrap
792626
(Qty 1)

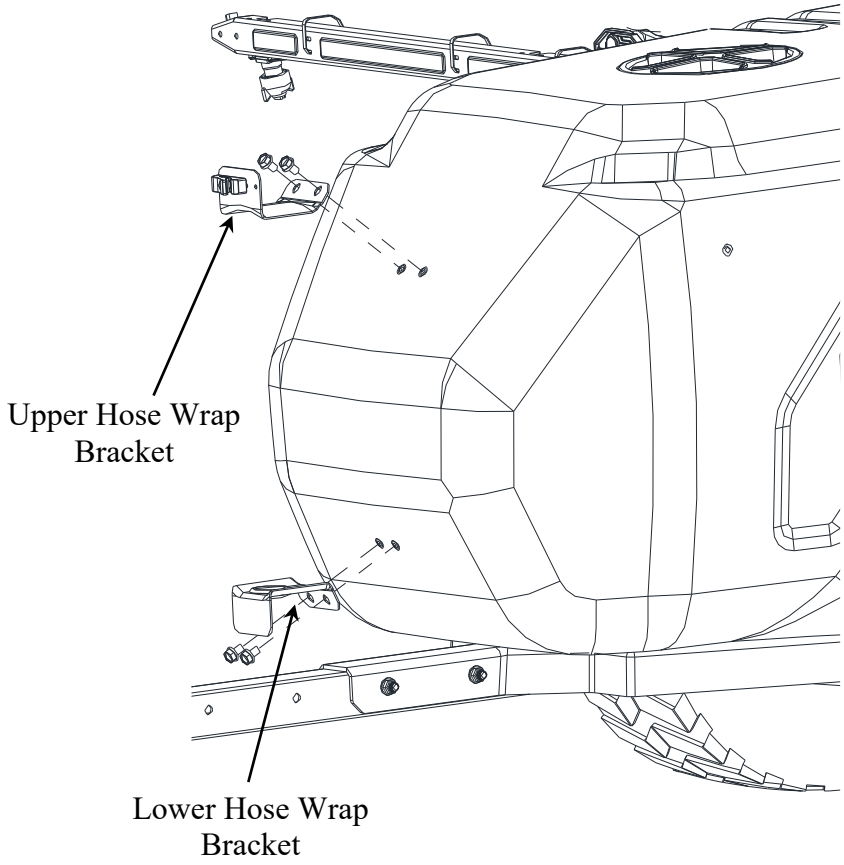

Assembly

Step 14 – Gun hose to regulator assembly

- Install gun hose to hose barb and secure it by tightening hose clamps
- Install 10-24 x 1/2" screws to gun clips
- Mount spray gun to gun clips

Tools Needed

- Philips head screwdriver

Fasteners Needed from Owner's Manual Bag:

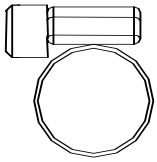

3/8" Hose Clamp
30746
(Qty 2)

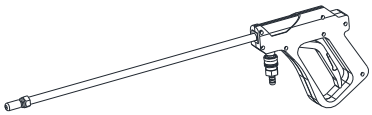

Spray Gun
798573
(Qty 1)

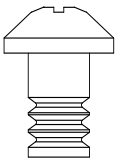

#10-24 x 1/2" screw
82059
(Qty 2)

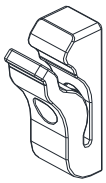

Gun clip
798457
(Qty 2)

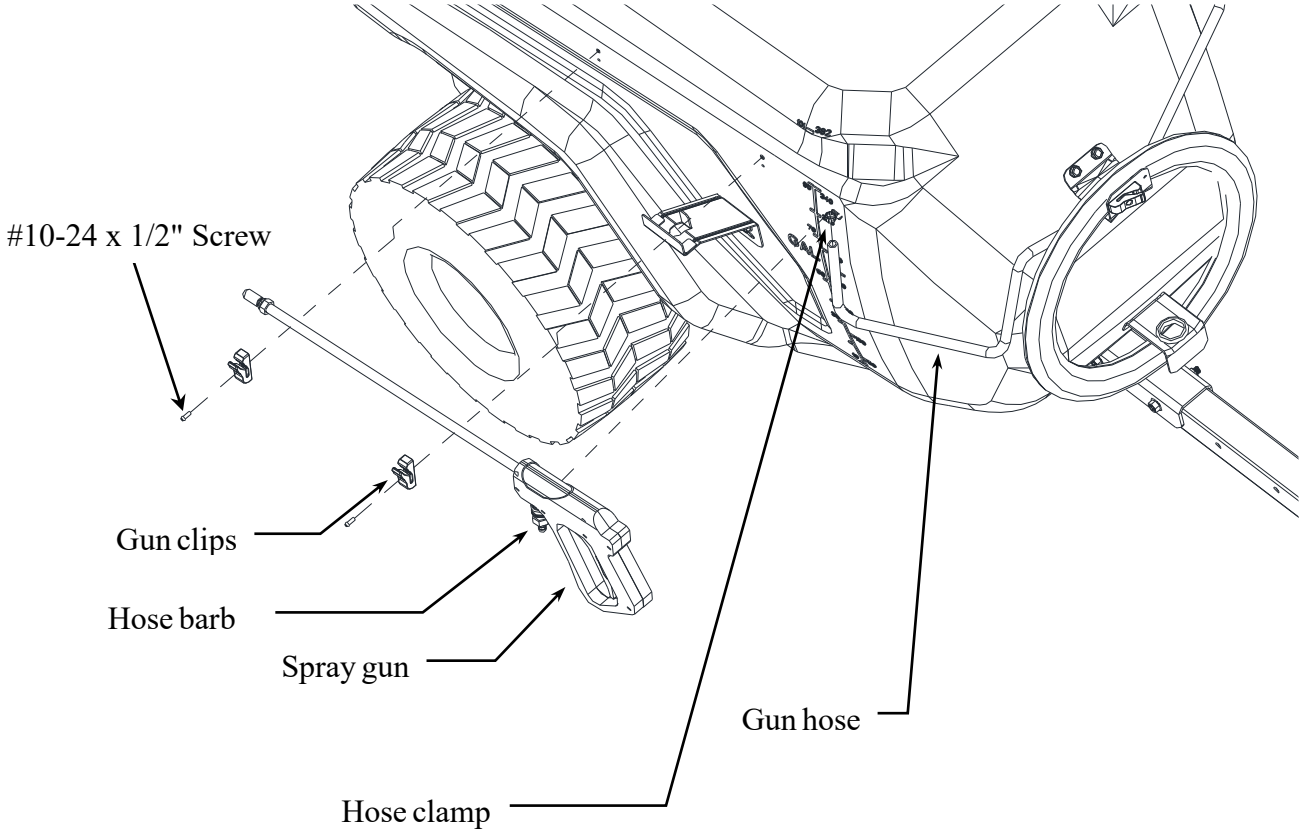

Step 14 – Gun hose to regulator assembly continued…

- Slide hose clamp over hose.
- Install hose onto hose barb on regulator assembly. Secure with hose clamp until tight.
- Install hose clip to tank with bolt to route gun hose.

Tools Needed

- Philips head screwdriver
- 1/2" Wrench.

Fasteners Needed from Owner's Manual Bag:

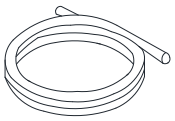

Gun Hose
797705
(Qty 1)

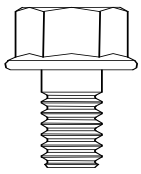

5/16"-18 x 1/2" Bolt
82014
(Qty 1)

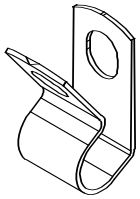

Hose Clip
777110
(Qty 1)

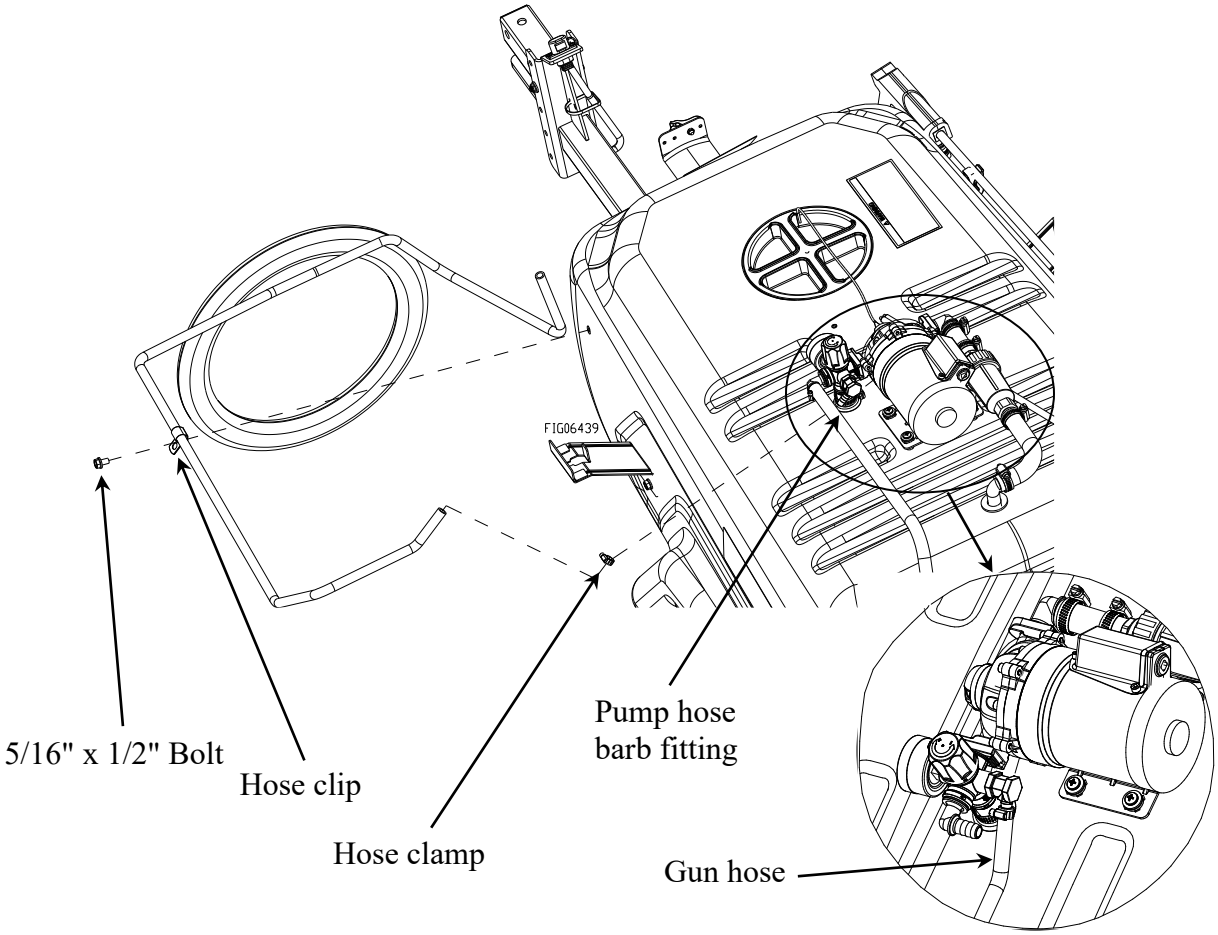

Detailed view
Assembly position

Step 15 – Connect Sprayer to Towing Vehicle

- Secure the sprayer to the tow vehicle with a hitch pin (not included, call 800.270.0810 and order Item#27293 (1/2" Dia. x 3 ⅝" L).

Tools Needed

- N/A

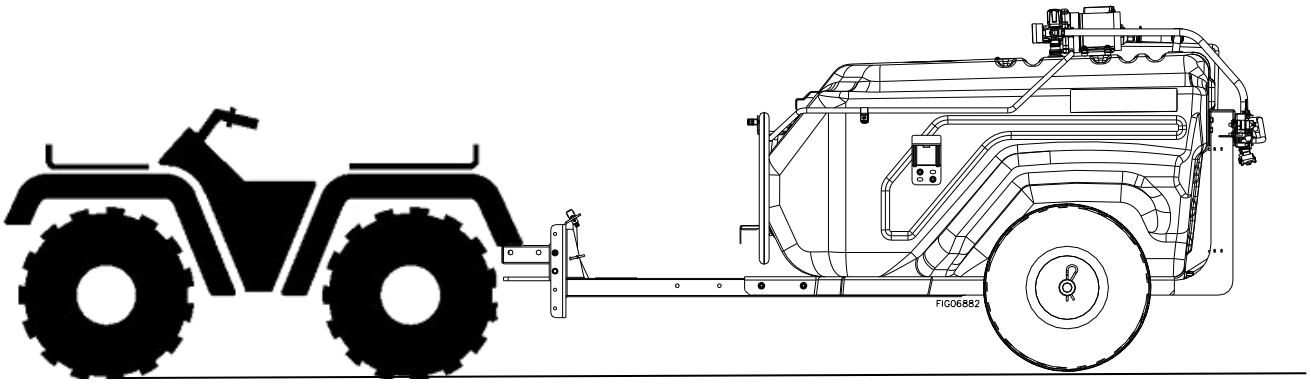

Assembly

Step Sixteen: Connect remote switch to vehicle battery

⚠ WARNING

Batteries are hazardous because they contain caustic acid, can emit explosive gases, and can cause electric shock.

Caution must be exercised when making connections to a battery to avoid shock and contact with the acid, and to prevent any sparking that could lead to an explosion.

ALWAYS follow the safety instructions and steps listed below i*n exact sequence* when connecting the sprayer's remote switch to the battery terminals.

1. Preparatory safety	**Preparatory safety steps:** • ALWAYS use eye protection • NEVER smoke or work near sparks or other sources of ignition. • NEVER touch both battery terminals at the same time or with any non-insulated tools. • If battery acid contacts skin or clothing, flush immediately with water and neutralize with baking soda.
2. Connect remote switch to battery	**Connect the sprayer's remote switch to the vehicle battery using the following procedure:** a) Disconnect the vehicle battery ground wire. b) Connect the remote switch's ***red*** battery clamp to the ***positive*** **(+)** terminal of the battery. c) Connect the remote switch's ***black*** battery clamp to the ***negative*** **(-)** terminal of the battery. d) Reconnect the vehicle battery ground wire. **WARNING:** Always connect in this sequence to avoid possible shock.
3. Connect remote switch to pump power cord	**Connect the remote switch to the pump power cord:** Note: Make sure the power switch is in the OFF position on the remote switch. 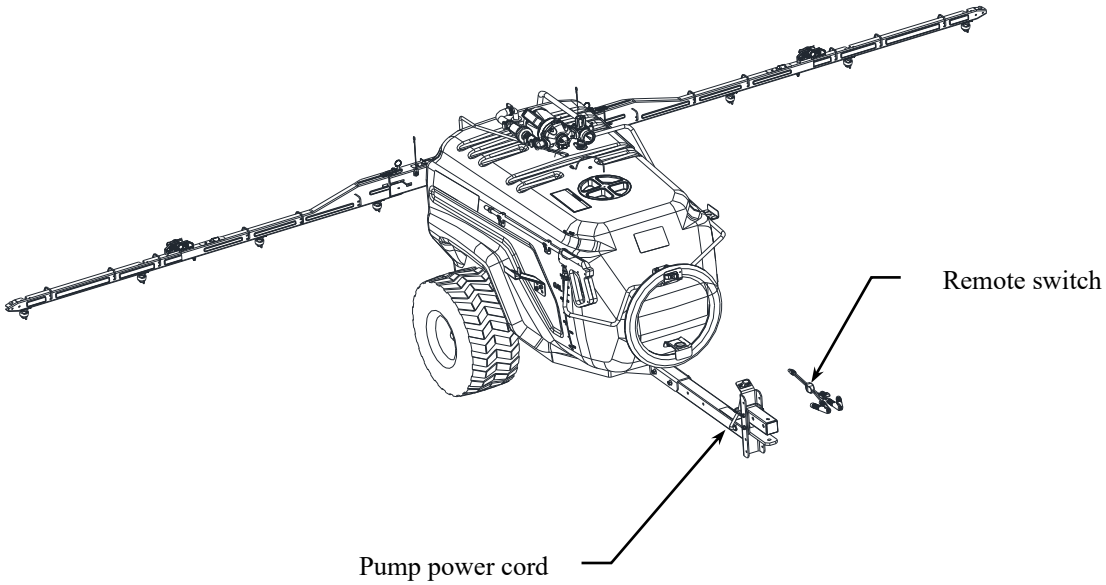

4. Verify connection	**Verify a complete connection has been made** by checking with a DC voltmeter, or by *briefly* turning the remote switch to the ON position and listening for pump activation.
5. Attach remote switch to vehicle	**Using supplied Velcro set, affix remote switch to vehicle in a position that is easily reached from the driver's seat.**
6. Disconnect after use	**AFTER EACH USE, disconnect power to the sprayer** by disconnecting the sprayer's pump cord from the remote switch – *the remote switch may remain connected to the battery.* *NOTE: It is important to disconnect power to the sprayer when not in use for safety reasons. ALWAYS verify that the power has been disconnected or the remote switch is in the OFF position before adding chemicals or servicing.*
7. To disconnect permanently	**When it is necessary to disconnect the sprayer's remote switch from the battery, use the following procedure:** 1. Disconnect sprayer's pump cord from the remote switch. 2. Disconnect the remote switch from the vehicle battery as follows: a) Disconnect vehicle battery ground wire. b) Disconnect the remote switch's *black* battery clamp from the *negative (-)* terminal of the vehicle battery. c) Disconnect the remote switch's *red* battery clamp from the *positive (+)* terminal of the vehicle battery. d) Reconnect the vehicle battery ground wire. **WARNING:** Always disconnect in this sequence to avoid possible shock. *(Remember that on some vehicle models, you may need to remove the sprayer to access the battery)*

Step Seventeen: Check and test completed assembly.

⚠ WARNING

Check and test completed assembly

Serious injury could result from chemical leaks if sprayer is improperly assembled or the design of the sprayer is modified.
Follow the steps below to ensure the sprayer is properly assembled. Never modify the sprayer design.

1. Check assembly	**Check assembly to assure the sprayer is properly assembled and in safe working condition:** a) Check that the gun clip screws are tight, hose clamps are secure, and bolts/nuts are properly fastened. b) While it is unlikely that factory assembled components become loose, they should also be checked to make sure they are tight.

2. Test with water	**Test the system for leaks with water:** a) Fill the tank with water. b) Connect the remote switch to the pump power cord and turn the remote switch ON. The pump is an "on demand" pump. When turned on, the pump will prime itself, and then turn off. When the gun trigger is squeezed, the pump will automatically start. c) Operate the spray gun by squeezing the gun trigger. d) Check for leaks throughout the system. If a leak is detected, fix the leak and re-test the system with water until no leaks are detected.

Machine Components

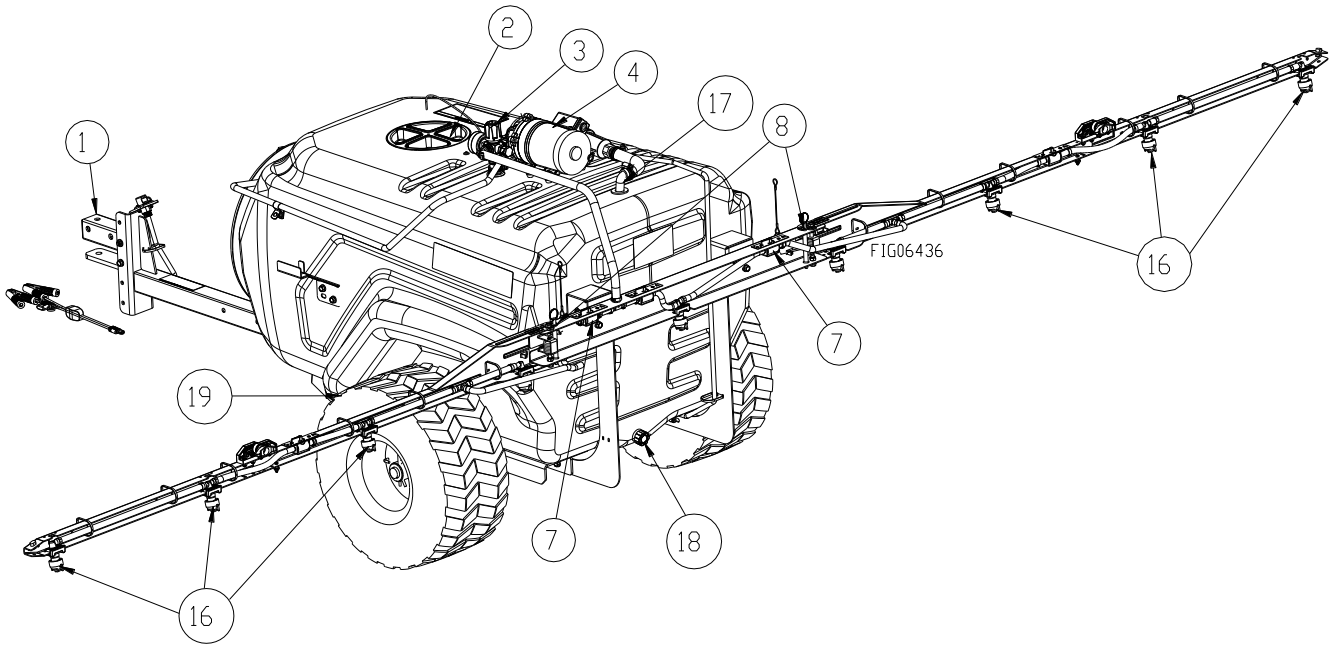

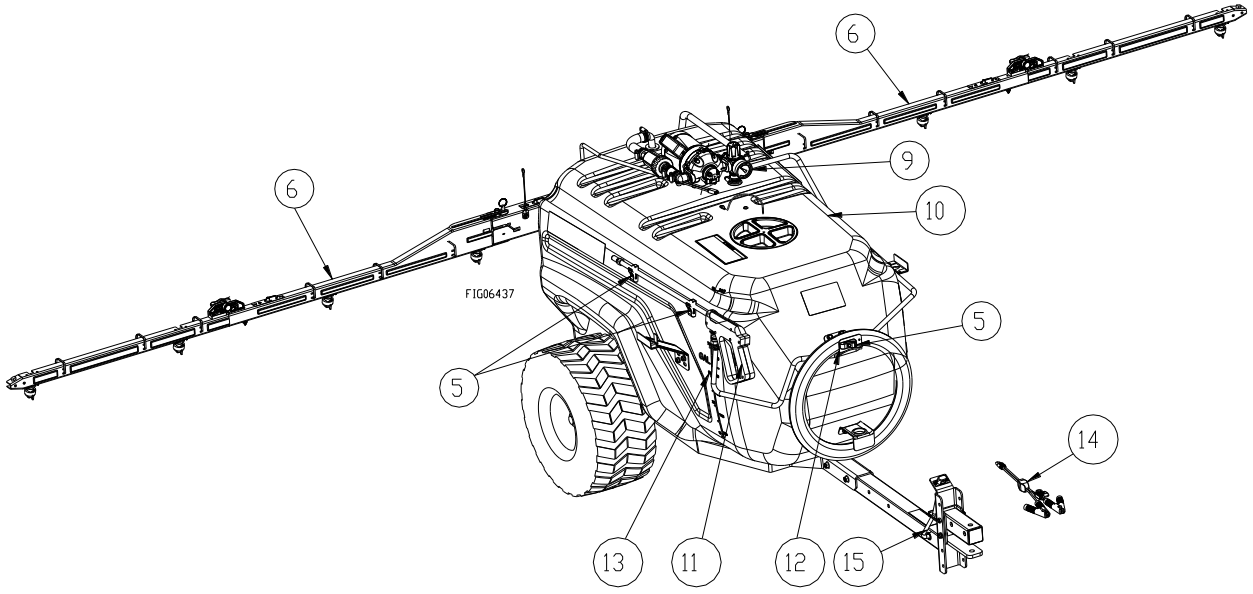

1. **Hitch Mount:** The hitch mount connects the vehicle hitch to the sprayer.
2. **Fill Cap:** The fill cap has a vent to allow air to enter the tank as the chemical is dispensed.
3. **Regulator:** This controls system pressure.
4. **Sprayer Pump:** The sprayer pump makes the chemical flow to the spray gun and the nozzle.
5. **Gun Clips:** Use the gun clips to store the spray gun.
6. **Boom Arm:** The boom arms hold the nozzles. They fold for easy storage.
7. **Boom Valves:** The boom valves shut off chemical to different boom sections allowing custom spray patterns.
8. **Pivot:** The pivot allows the boom arms to fold in for easy storage and breakaway when struck while towing.
9. **Pressure Gauge:** The pressure gauge is an indicator of the pressure in the system.
10. **Sprayer Tank:** The sprayer tank holds the chemical.
11. **Spray Gun:** Use the spray gun to apply chemical to specific areas.
12. **Hose Wrap:** The hose wrap provides a storage location for the gun hose on the tank.
13. **Fill Marks:** Fluid capacity marks. Tank should be level when measuring.
14. **Remote Switch:** The remote switch connects the battery to the pump power cord and allows the operator to turn the sprayer pump on and off.
15. **Pump Power Cord:** The pump power cord connects the remote switch to the pump.
16. **Boom Nozzles:** The nozzles meter and distribute the chemical to a large area.
17. **Suction Tube:** The suction tube is the inlet line for the pump.
18. **Drain Cap:** Remove drain cap to empty tank of fluid.
19. **Tires:** The tires have a wide tread to prevent turf damage.

Operation – Important Safety Information

Now that you have completed and tested your assembly, there is some important safety and health information you need to know with regard to handling and spraying chemicals, as well as vehicle handling with the sprayer attached.

⚠ WARNING

Carefully read and make sure you understand the following safety information before using the sprayer.

General Chemical Safety:

⚠ WARNING

Pesticides are hazardous chemicals.

Heed the warnings below and follow all instructions carefully.

Improper handling of chemicals can result in serious injury or illness, or cause damage to the environment.

- **Chemical label**. ALWAYS READ and FOLLOW all chemical label instructions.
- **Licensing/regulation**. Refer to any applicable licensing restrictions or state/federal regulations with regard to the application of the particular chemical you plan to use.
- **Emergency procedures**. Before handling chemicals, carefully review the "Chemical Accident Procedures" listed later in this section, as well as the "Statement of Practical Treatment" on the chemical label.
- **Inhalation/contact**. ALWAYS take precautions to avoid inhaling or coming into contact with the chemical.
- **Personal protective equipment**. ALWAYS wear protective clothing, eye protection, and chemical-resistant gloves when filling, using and cleaning the sprayer. Wear additional protective gear (such as facemask or apron) as recommended on the chemical label.
- **Children/pets**. Pesticides can be especially toxic to children and animals. ALWAYS exercise extra caution around children. Keep sprayer and all spray materials away from children and animals.
- **Ventilation**. ALWAYS ensure there is adequate ventilation when mixing, pouring, or spraying.
- **Flammables**. NEVER use any flammable chemicals in the sprayer.
- **Corrosives**. DO NOT use corrosive chemicals in the sprayer. They can weaken the sprayer and its parts, resulting in leaks. Check with the chemical manufacturer to ensure chemical is compatible with all components of the sprayer.
- **Chemical interaction**. ALWAYS flush the sprayer before switching chemicals. Different chemicals may interact dangerously with each other.
- **Chemical storage**. ALWAYS store pesticides in a properly labeled container and in a secure location per the manufacturer's recommendations.
- **Health monitoring**. Monitor the health of operators who are frequently exposed to pesticides, as recommended by the chemical label or local/federal regulations.

Operation – Important Safety Information

Chemical Application Safety:

⚠ WARNING

Caution must be used when spraying chemicals to avoid unsafe exposure to humans and the environment.

Heed the warnings below and follow all instructions carefully.

Before Spraying

- **Sprayer prep**. ALWAYS inspect and prepare the sprayer before use according to the directions provided in this manual.
- **Keep sprayer off**. Do not turn on power to the sprayer until ready to spray in order to avoid unintentional spray release.
- **Broadcast nozzle down**. Make sure broadcast nozzle is oriented to spray straight down before starting the sprayer. An incorrectly positioned broadcast nozzle may spray chemicals on you or others
- **Wind speed**. NEVER spray when wind speed exceeds 4 MPH in order to minimize spray drift.
- **Clear area/post**. ALWAYS keep the work area clear of people and pets. POST warning notices to restrict access by the public for the period recommended on chemical label.
- **Operator age**. You must be 16 years of age or older to operate this sprayer. Pesticides are especially toxic to children.

During Spraying

- **Over application**. DO NOT over apply pesticide. Apply at a rate recommended by chemical manufacturer. Excess pesticide can be dangerous to humans, damage desirable plants, and contaminate soil and water sources.
- **Never point gun**. NEVER point the spray gun at people or animals.
- **Children/pets**. ALWAYS exercise extra caution when spraying near areas accessible to children and pets.
- **Eating/smoking**. DO NOT eat, drink, smoke, rub your eyes, or touch any part of your bare skin while handling chemicals and spraying.
- **Heat/flames**. DO NOT spray near open flames or sources of heat.
- **Spills**. ALWAYS clean up spills immediately per instructions on the chemical label.
- **Unattended**. ALWAYS turn off vehicle and set brake or block wheels, turn off power to sprayer, and relieve system pressure before leaving sprayer unattended.
- **Troubleshooting**. ALWAYS refer to the safety instructions in the Troubleshooting Section before attempting any repairs.

After Spraying

- **Clean sprayer**. ALWAYS clean the sprayer immediately after use according to the directions provided in this manual.
- **Decontaminate**. ALWAYS decontaminate yourself immediately after you are finished spraying and handling chemicals. Wash all exposed areas of the body with soap and water and remove and launder clothing.
- **Chemical disposal/storage**. ALWAYS dispose of or store remaining chemicals properly as recommended on the chemical label.

Operation – Important Safety Information

Towing/hauling Safety:

⚠ WARNING

The filled sprayer is very heavy. It can crush and cause serious injury if it rolls out of control or tips over.

Follow the instructions below for safely towing the sprayer.

- **Read vehicle instructions**. Review towing safety instructions in your towing/hauling vehicle manual.
- **Driver age.** You must be 16 years of age or older to operate the towing/hauling vehicle with the sprayer attached.
- **Securely attached**. Be sure sprayer is securely attached to the towing/hauling vehicle.
- **Tires**. Make sure sprayer tires are fully inflated and in good repair before towing. Do not over inflate. Serious injury could occur if tire explodes.
- **Vehicle handling.** Be aware that vehicle handling will be affected when towing the filled sprayer. Exercise caution to avoid loss of control or sprayer overturning:
  - **Keep speed to a minimum** so you can maintain control at all times. Reduce speed prior to turns.
  - **Allow for wider turns** and for **more distance to stop**.
  - **Avoid any sudden** steering maneuvers, starts, or stops that could create sway.
- **Rough or sloped terrain**. Slow down and exercise extra caution on rough or sloped terrain in order to reduce risk of rollover. Pick the most level route possible when transporting across fields. Drive up and down slopes that cannot be avoided, rather than across. Use a vehicle equipped with a Roll Over Protection System (ROPS) if you will be operating on non-level terrain.
- **BE AWARE of the added length of the sprayer and that visibility may be reduced** when making turns or backing up.
- **Ride / transport.** Never ride or transport cargo on the sprayer.
- **Under the influence**. Never tow or operate this sprayer while under the influence of alcohol, drugs, or medication
- **On public roads.** If towing on a public road, make sure to comply with all local, state, and federal towing requirements. It is the sole responsibility of the purchaser to obtain licensing, trailer lights, safety chains or signage as needed to comply.
- **Unattended**. Turn off both the sprayer and the vehicle, and set the brake or block the wheels, before leaving the sprayer unattended.

Chemical accident procedures:

⚠ WARNING

Before you fill the sprayer, review the following information with regard to handling accidents.

Chemical spills, sprayer leaks, personal contamination, and poisoning are accident situations which you may encounter. **All require an immediate response – See instructions below.**

Operation – Important Safety Information

Sprayer leak	**In the event that the sprayer develops a leak while spraying chemicals, you must *immediately stop spraying*.** Turn off power to the sprayer and follow the directions below, as applicable.
Bodily chemical contact	**Personal contamination can occur when chemicals splash, spill, or spray directly onto a person.** 1. Follow the emergency first aid instructions on the chemical label listed in the "First Aid" or "Statements of Practical Treatment" section. General procedures include: a) Eyes – immediately flush with water or follow other directions as specified on the chemical label. b) Skin – immediately wash all contaminated skin surfaces with soap and water, or follow directions as specified on the chemical label. c) Clothing – remove contaminated clothing immediately. Dispose of heavily contaminated clothing per the instructions on the chemical label for safe chemical/container disposal. 2. Seek medical advice if instructed on the label, or if the victim experiences symptoms of harmful effects such as burning, swelling, nausea, chest pain, difficulty breathing, dizziness or confusion. When seeking medical advice, be sure to bring the chemical product label.
Poisoning by ingestion or inhalation	**In case of poisoning from ingestion or inhalation**: IF THE VICTIM HAS COLLAPSED OR IS NOT BREATHING, ***CALL 911***. Otherwise: 1. If you are the victim, immediately seek assistance from nearby personnel because you may become incapacitated. 2. Follow the emergency first aid instructions on the chemical label in the "First Aid" or "Statement of Practical Treatment" section. 3. Call a poison control center for further advice. **In the U.S., call 1-800-222-1222 to be automatically linked to the nearest certified poison control center.** Have the chemical label available for reference.
Chemical spills	**Chemical spills must be quickly contained and properly cleaned up.** Refer to the chemical label for any specific clean-up instructions with regard to the chemical spilled. General procedures include: 1. **Control** the spill by stopping the source of the spill. If the source of the spill is a container leak, place the leaking container in a larger, watertight container. Keep unprotected people away from the spill site. 2. **Contain** the spill so that it does not spread and get into water sources. Use a shovel or other tool to make a dike around the spill with soil, sod, or absorbent material. 3. **Clean up** the spill immediately -- Absorbent materials like ground corncobs or pet litter should be spread on the spill area to soak up the pesticide. The contaminated material should then be shoveled into a leak proof container. Do not flush the spill area with water until you receive advice as directed below. 4. **Seek additional advice** from the chemical manufacturer and your state's pesticide regulatory agency regarding decontamination of the spill site: - *Chemical manufacturer*. The chemical label provides contact information for the chemical manufacturer. - *State pesticide regulatory agency*. In the U.S., call the National Pesticide Information Center at 1-800-858-7378 for assistance in determining how to contact your state's pesticide regulatory agency.

Operation – Preparing the Sprayer for Each Use

If the sprayer has been used previously, it must be prepared BEFORE EACH SUBSEQUENT USE.

⚠ WARNING

Read instructions below carefully for inspecting and preparing the sprayer.
Damaged or clogged equipment could result in leaks or uncontrolled spray.
Leaks could result in injury to the operator or bystanders from chemical exposure, or cause damage to the environment.

Important safety rules:

- **Power off.** Make sure all power is OFF before cleaning, inspecting, or servicing the sprayer.
- **Guards / shields.** Make sure all guards and shields are replaced after servicing the sprayer.
- **Replacement parts.** If a part needs replacement, only use parts that meet the manufacturer's specifications. Replacement parts that do not meet specifications may result in a safety hazard or poor operation of the sprayer.

1. Ensure sprayer attached	**Ensure the sprayer is securely attached to the vehicle.**
2. Ensure tank empty	**Ensure the sprayer has been thoroughly flushed and drained of all residual chemical from prior uses.**
3. Clean suction strainer	Clean the inlet filter of any chemical residue. It is important to clean the inlet filter before each use to ensure it is not clogged and to prevent residual chemical from contaminating sprayer contents. a) Using rubber gloves, remove clamps, draw tube hose, fittings and Inlet filter as shown in figure below. 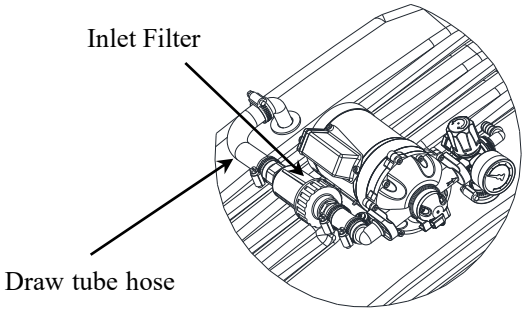 b) Run the inlet filter under fresh water to remove debris.
3. Inspect & repair	**Inspect and test the sprayer thoroughly**: a) Inspect hoses for exposed mesh and holes. Replace all worn or damaged hoses. b) Inspect tank and fittings for cracks and leaks. Replace all damaged fittings with original NorthStar parts. c) Check to be sure retaining nut on gun nozzle is tight. d) Check to be sure all other nuts, bolts, and screws are tight. e) Check wheels and tires, if equipped. Make sure wheel lugs are tight and tires are inflated. f) *Partially fill tank with plain water and spray to test for leaks*. Repair as needed. ***IMPORTANT: After any repair work has been done, ALWAYS test for leaks with water one final time before using.***

Operation – Preparing the Sprayer for Each Use

Step 1: Assess wind conditions and clear work area.

Before you decide to spray, you must determine whether wind conditions are suitable. You must also restrict access to the work area to ensure the safety of bystanders.

⚠ WARNING

Do not spray if wind speeds are greater than 4 MPH or if there are bystanders in the intended spray area.

1. Assess wind speed	**Assess weather conditions to ensure that it is not too windy to spray.** **DO NOT SPRAY if wind speeds are greater than 4 MPH.** *Visible indication of wind speed*: If leaves are in constant motion or there is any branch movement, DO NOT spray because the wind is too strong.
2. Clear work area	**Clear the work area of all bystanders and pets.** Restrict access by the public for the period recommended on chemical label.

Step 2: Fill the sprayer.

⚠ WARNING

ALWAYS wear personal protective equipment as directed on the chemical label when handling pesticides.

Long pants and sleeves, chemical resistant gloves, and eye protection are strongly recommended. Additional protective gear may be required depending on the particular pesticide.
The motor surface temperature can reach temperatures over 70° C. In order to avoid scalding, wear gloves during operation of the sprayer.

Fill the sprayer using the following steps:

1. Review safety information	**Review the "Operation – Important Safety Information"** related to General Chemical Safety and Chemical Accident Procedures provided in this manual.
2. Choose safe mixing/ loading area	**Choose a safe pesticide mixing and loading area.** - Choose an outdoor, well-ventilated area away from unprotected people, animals, food, and other items that might become contaminated.
3. Wear personal protective equipment	**Wear personal protective equipment as directed on the chemical label.** - Note that additional equipment may be specified for mixing and loading activities.
4. Turn off sprayer and vehicle	**Turn OFF power to the sprayer before filling.** - The vehicle should also be off, with brake set or wheels blocked to prevent unintended movement.
5. Remove fill cap	**Remove the fill cap located on top of the sprayer.** 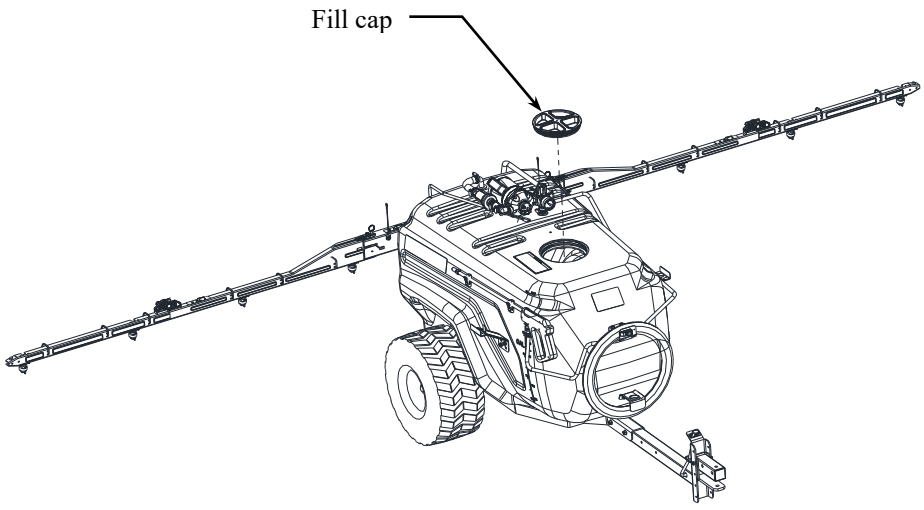
6. Ensure tank flushed	**Ensure tank is flushed of all chemicals from prior uses**. - Chemicals can interact dangerously when mixed, and residue chemicals are also a health hazard.

Operation – Using the Sprayer

7. Check drain cap	**Before filling tank, ensure drain cap is securely tightened.** 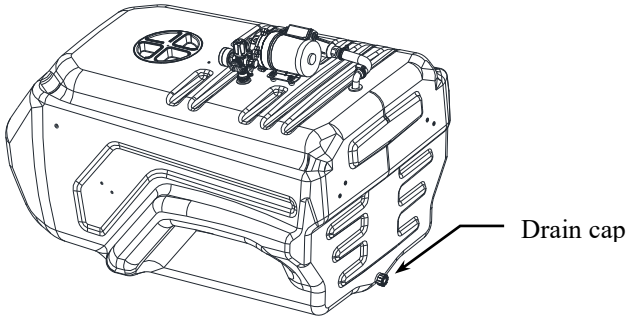
8. Fill tank	**Add pesticide to tank through fill cap:** a) Confirm the chemical/water dilution ratios specified on the chemical label. *b)* Determine chemical and water volumes needed for the planned application, taking into consideration that maximum tank capacity is 100 Gallons. *<u>Note</u>: Only purchase and mix as much chemical as you need for the planned application in order to minimize chemical over application and the need for storing unused chemicals.* c) Add chemical to the tank through the fill cap. *If the chemical is not pre-mixed, add water and pesticide concentrate in the order prescribed on the label.* 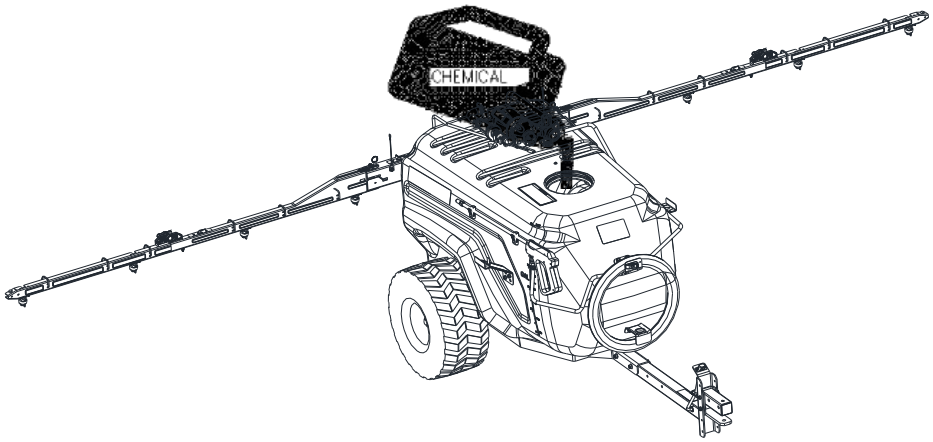
9. Ensure chemical mixed	**Ensure chemical is thoroughly mixed in tank.** - Stirring device should be made of metal or plastic, non-chemical absorbing material, and then properly cleaned and stored after use.
10. Replace fill cap	**Replace fill cap and tighten securely**.

Step 3: Operate the sprayer.

⚠ WARNING

ALWAYS wear personal protective equipment as directed on the chemical label when spraying.

Long pants and sleeves, chemical-resistant gloves, and eye protection are strongly recommended. Additional protective gear may be required depending on the particular pesticide.

1. Review safety information	**Review the "Operation – Important Safety Information"** related to Chemical Application Safety and ATV Vehicle Handling Safety provided in this manual.
2. Wear personal protective equipment	**Wear personal protective equipment as directed on the chemical label.**
3. Close broadcast/ boom valves	**Close broadcast/boom valves to prevent accidental spray release.** 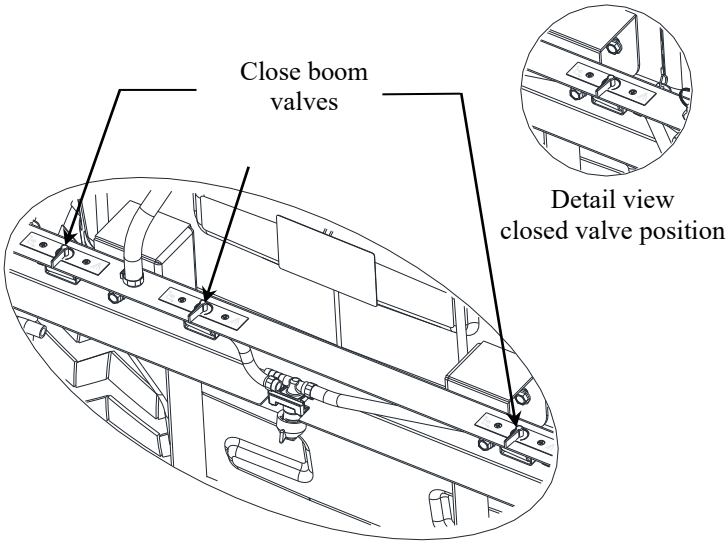
4. Turn on power	**Turn on the power to the sprayer.** 1. Verify the remote switch is connected to the pump power cord. 2. Turn the remote switch to the "ON" position. *Note: The pump will start automatically when power is turned on.*

5. Adjust pressure regulator	**Turn pressure regulator knob to adjust outlet pressure** 1. Turn knob clockwise to increase pressure. 2. Turn knob counter-clockwise to decrease pressure *Note: If the pressure regulator knob is completely tightened, the pressure setting will be higher than the pressure switch on the pump (60 psi). This allows the pump to operate as a demand pump and turn on only when spraying.* 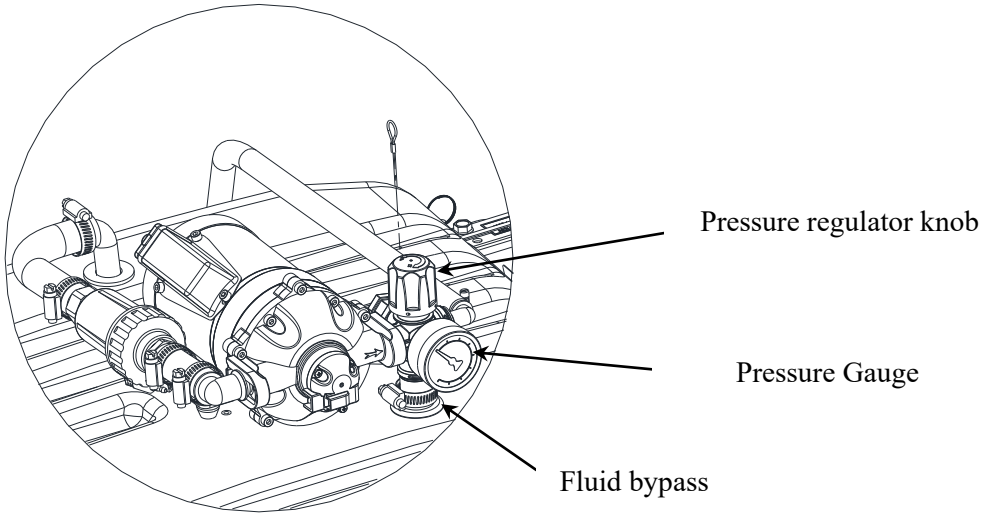
6. Begin agitation if needed	**Some formulations of liquid pesticides do not remain in solution and should be agitated to maintain a uniform mix.** The pressure regulator on this sprayer can be used as an agitator. If the pressure is set below the pump's pressure switch setting (60 psi), the pump will continue to run when not spraying. Fluid will be diverted through the pressure regulator back to the tank. This bypass fluid will keep the contents of the tank well-mixed, and allow the sprayer to be used with pesticides classified as "flowable" ("F" or "L"), "wetable powder" ("WP" or "W"), "emulsion" ("EC" or "I"), microencapsulated" ("M"), or "water dispersible granules" ("WDG" or "DF")

Operation – Using the Sprayer

7. Squeeze trigger & adjust nozzle

To spray, squeeze the gun trigger.

- Twist the spray nozzle to adjust from a straight stream to hollow cone spray pattern, as recommended on the chemical label for proper delivery rate.

Note: It is not unusual for the operator to be exposed to chemical drips while adjusting the nozzle – gloves should be chemical resistant.

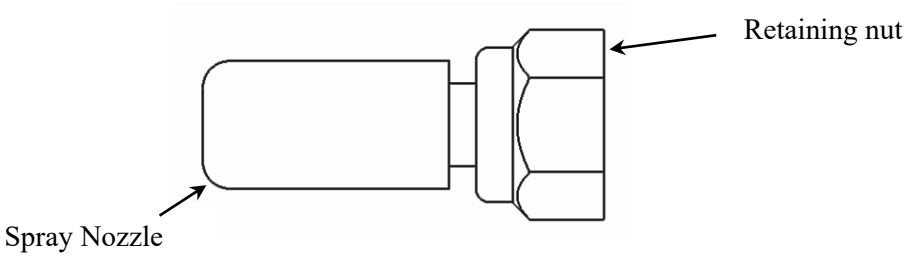

8. Operate broadcast boom

A. Open boom valves

Open the left, right, or five boom valves as desired.

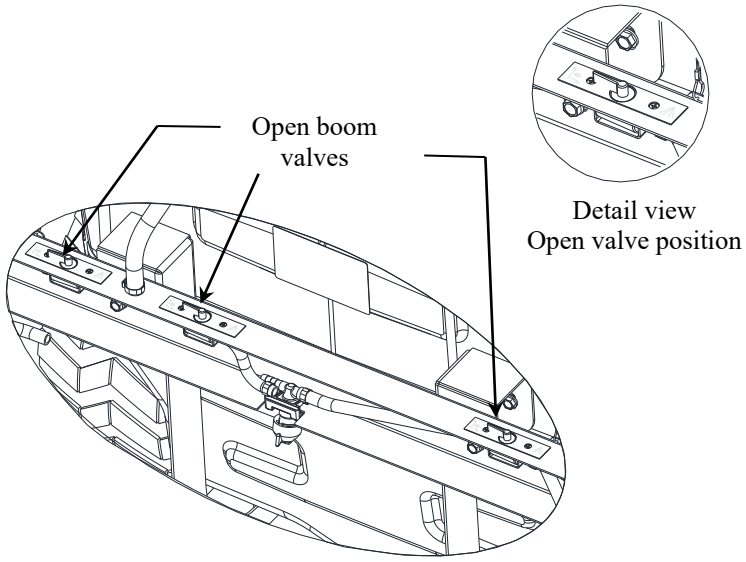

B. Remove pin(s) and unfold one or both boom arms as required. Reinsert pin(s) to secure boom arms.

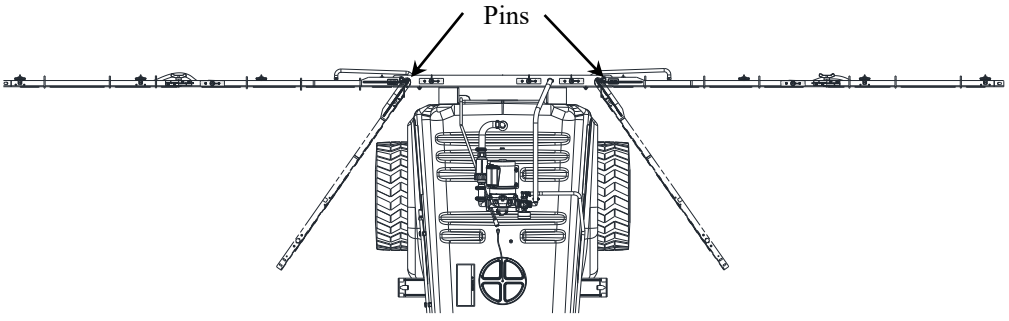

Top view

C. Ensure uniform coverage

To ensure proper coverage, the height of the unfolded boom nozzles should be about 20" from the ground. The sprayer must be level with the ground to get this height.

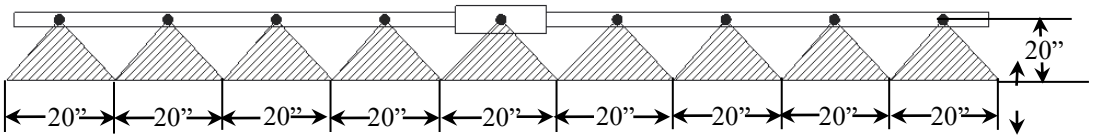

Sprayer pattern as shown above for 9 sprayers

D. Begin to spray

Turn the remote switch ON to begin spraying.

9. Leaving unattended	**If the sprayer must be left unattended at any time**: a) Disconnect power to the sprayer. b) Relieve system pressure by depressing the gun trigger. c) Turn off the vehicle. Set brake or block the wheels.
10. Discontinue use if clogged or inoperative	**If the sprayer becomes clogged or inoperative during use, *discontinue use immediately*.** - DO NOT attempt to service while chemicals are in the sprayer and power is connected. - Return to service area to review instructions for troubleshooting before attempting to service.

Note: *A reserve, clean container capable of holding at least 100 Gallons should be kept for use when the sprayer tank needs to be emptied temporarily for repairs. It is advisable to purchase a reserve tank suitable for pesticide storage from Northern Tool + Equipment for use in these circumstances. The container should be properly labeled as to its contents if it is used.*

Step 4: Clean sprayer and decontaminate after use.

When done using the sprayer, it is important to clean the sprayer and decontaminate yourself. Do not store the sprayer with chemicals in the tank, as it is unsafe and could also result in damage to the equipment.

⚠ WARNING

Clean-up and decontamination procedures must be followed after each use.

Improper equipment clean-up and disposal of chemicals can result in dangerous chemical exposure to humans and the environment, as well as equipment damage.

Personal decontamination is required after spraying to minimize unsafe exposure to chemicals and potential illness.

1. Drain tank	**If there is excess pesticide left in the tank, drain the tank:** a) Disconnect power to the sprayer and relieve system pressure by depressing the gun trigger. b) Find a suitable container in which to drain the unused pesticide. Place it under the tank drain hole. c) While wearing rubber gloves, eye protection, and all other required personal protective equipment, remove the drain cap and allow pesticide to drain into container. d) When tank stops draining, replace drain cap. Tighten securely.
2. Unused chemical	**Properly store or dispose of unused chemical:** a) If the unused pesticide is to be stored for future use: Store all unused pesticide in its original, or a suitably marked, container in a secure location out of the reach of children & animals. b) If remaining pesticide is to be disposed: Properly dispose of the remaining chemical and its container per the chemical manufacturer's recommendation and according to local hazardous waste disposal regulations.
3. Flush sprayer	**Flush the sprayer per the chemical manufacturer's recommendations.** A general procedure is as follows: a) Add fresh water to the tank. b) Reconnect power to the sprayer. c) Operate the spray gun and discharge all rinse water onto an area that can accept dilute pesticide application. d) Add 5 gallons of the chemical manufacturer's recommended cleaning solution. Operate the spray gun, collecting the discharged solution if recommended by the manufacturer. e) After flushing, disconnect power to the sprayer and be sure all system pressure is relieved by squeezing the gun trigger. f) Dispose of cleaning solution discharge as recommended by the manufacturer of the solution.
4. Decontaminate & launder	**Decontaminate yourself after you are finished handling chemicals:** a) Remove all clothing worn during spraying and chemical handling. b) Wash all exposed parts of the body with soap and water. c) Launder clothing separately from other wash.

Specifications

⚠ WARNING

Before troubleshooting or attempting to service, read the following safety rules to avoid accidental exposure to chemical and also risk of electric shock.

Note: *A reserve, clean container capable of holding at least 100 Gallons should be kept for use when the sprayer tank needs to be emptied temporarily for repairs. It is advisable to purchase a reserve tank suitable for pesticide storage from Northern Tool + Equipment for use in these circumstances. The container should be properly labeled as to its contents if it is used.*

Before attempting to service the sprayer:

1. Personal protective equipment	**Wear personal protective equipment as directed on the chemical label while servicing your sprayer.**
2. Review troubleshooting table	**Review the Troubleshooting Table below for the type of problem you are experiencing.** However, DO NOT attempt to repair until the steps listed below are followed.
3. Empty and flush	**If the cause listed for your problem is Clogged intake tube, Clogged suction strainer, or Worn spray gun nozzle:** empty the tank and flush the sprayer with water as directed in the section, "Operation – Step Four". *- In order to avoid accidental exposure to chemicals, never attempt to unclog the intake tube or suction strainer, or service the spray gun nozzle, until the tank has been emptied and the sprayer flushed with water.*
4. Disconnect power/relieve pressure	**Disconnect power to the sprayer and be sure all system pressure is relieved by squeezing the gun trigger.**
5. Perform repairs	**Follow the directions provided in the troubleshooting table to repair the sprayer.** *NOTE: Never try to unclog the sprayer nozzle by blowing through it.*
6. Test after servicing	**After servicing, ALWAYS test the sprayer for leaks with plain water before using.**

PROBLEM	CAUSE	SOLUTION
Pump will not turn on	Bad electrical connection	Check battery connections
	Fuse blown	Replace fuse
	Short in wires	Check condition of wires
	Low voltage	Check voltage
Low pressure	Worn spray gun nozzle	Replace spray gun
	Worn boom nozzle	Replace boom nozzle
Low flow	Clogged intake tube	Remove obstruction
	Clogged suction strainer	Clean suction strainer
	Low voltage	Check voltage
Poor spray distribution	Clogged intake tube	Remove obstruction
	Worn spray gun nozzle	Replace spray gun
	Worn spray boom nozzles	Replace spray boom nozzles
Pump cycles while not spraying	Leak in the system	Tighten leaking hose clamps or fittings, replace spray gun

Specifications

Electrical System Requirements	
Electrical connection	12 VDC
Amp draw from pump	23 Amps
Sprayer Specifications	
Maximum GPM	7.0 GPM (26.53 Liters/min.)
Maximum Pressure	60 PSI (4.13 Bar)
Tank Maximum Capacity	101 Gallons (378.5 Liters)
Overall Dimensions	58.5" x 46.25" x 34.5" (149cm x 117.5cm x 88cm)
Dry Weight / Weight full of water	200 lb. / 1043 lb. (90.7 kg. /473.1 kg.)
Tongue Weight (full of water)	126.8 lb. (57.5kg)
Broadcast Nozzle Specifications	
Total Spray Width	180 in. (457 cm)
Max. towing speed	10 mph (16kph)

Component Materials*

Tank.....	Polyethylene, EPDM
Suction Tube.....	Polypropylene, PVC, Stainless Steel
Boom Components…..	Stainless Steel
Hose.....	PVC, EPDM (Max. Pressure 6.9bar/100psi)
Pump.....	Polypropylene, Viton®, TM for Santoprene
Valves.....	Polypropylene, Polyacetal, Viton®, Nylon
Gun and Nozzle..……..	Brass, EPDM, Stainless Steel, NBR, Aluminum

*Before using any chemical, check to ensure the chemical is compatible with all materials in the system.

The noise emissions from this product do not exceed 70 dB(A).

Note: The sprayer is not compatible with bleach or chlorine products. Also, pumping any petroleum based fluid (gasoline, diesel, kerosene, oil) will severely damage the pump.

The manufacturer reserves the right to make improvements in design and/or changes in specifications at any time without incurring any obligation to install them on units previously sold.

Any Questions, Comments, Problems or Parts Orders

Call NorthStar Product Support 1-800-270-0810

Exploded View & Parts List – Rev N.1

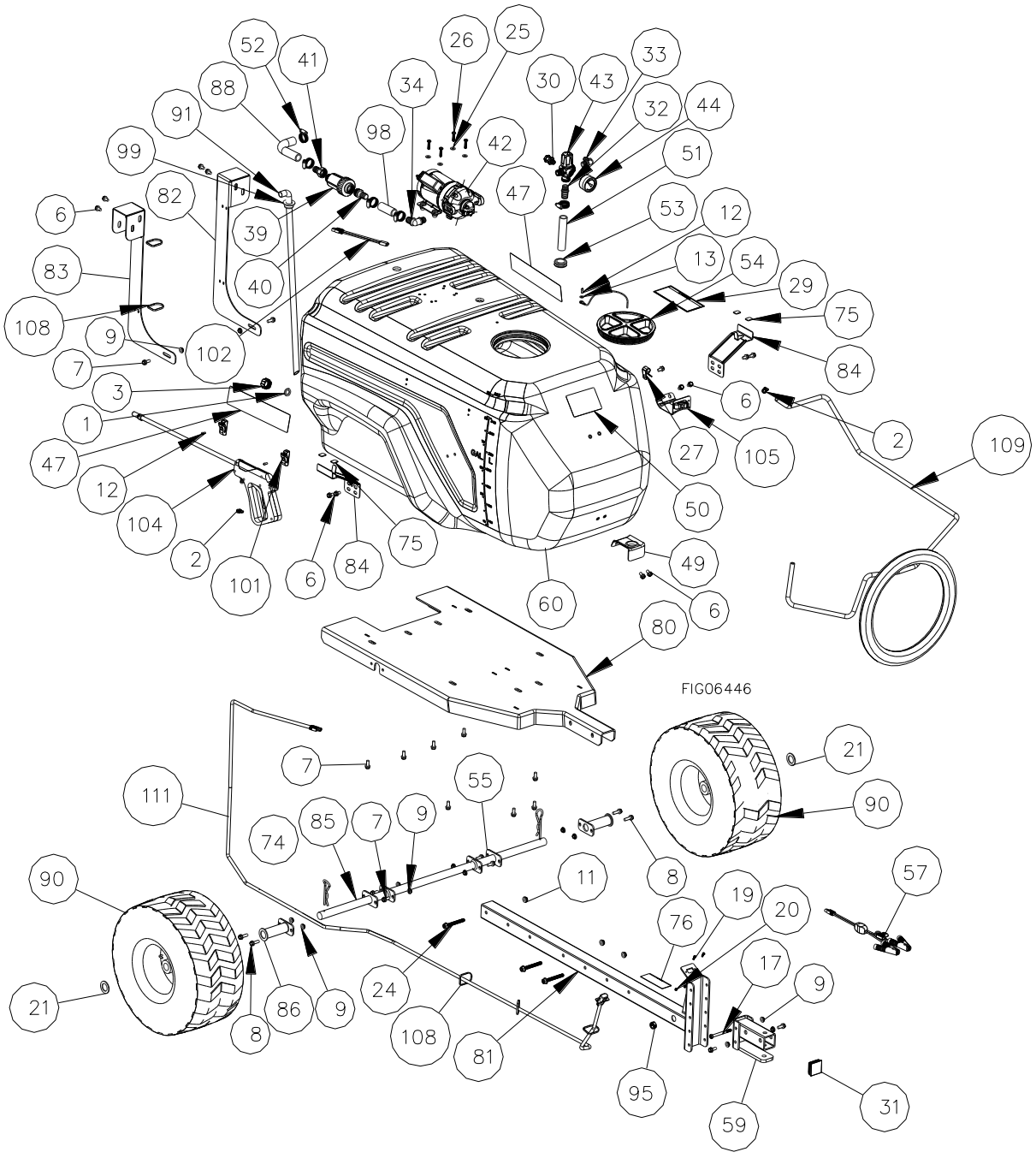

Exploded View & Parts List Rev N.1 Continued

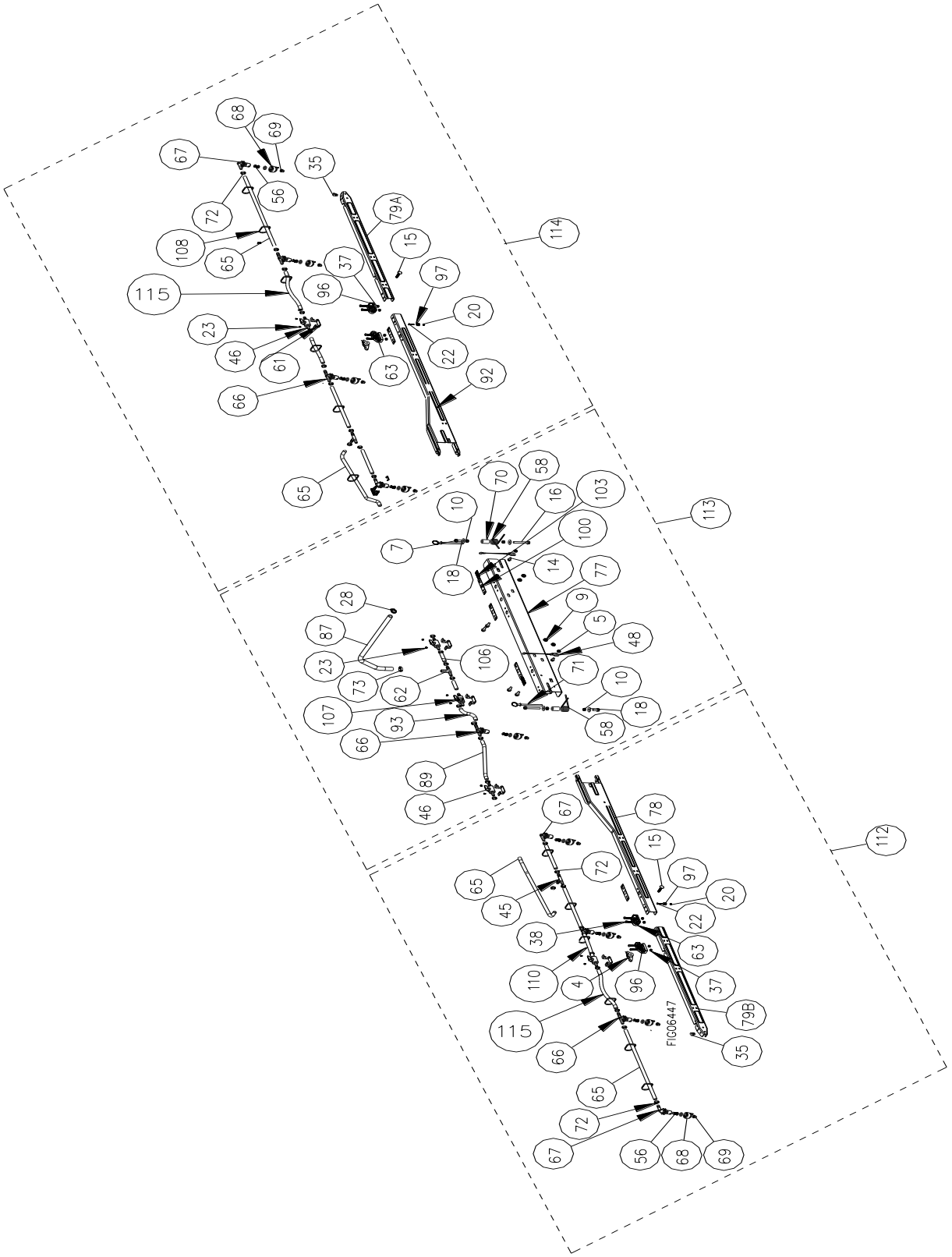

Exploded View & Parts List - 282592 Rev N.1

Ref#	Part#	Description	Qty
1	784460	O-ring, drain plug	1
2	30746	3/8" hose clamp	4
3	789814	Drain plug	1
4	38578	T-handle knob	2
5	82013	1/4" – 20 HHSF Nut	2
6	82014	5/16" -18 x 1/2" HHSF Bolt	13
7	82015	5/16" -18 x 3/4" HHSF Bolt	22
8	82016	5/16" -18 x 1" HHSF Bolt	4
9	82019	5/16" -18 HHSF Nut	17
10	82020	5/16" -18 Locknut	4
11	82026	3/8" -16 HHSF Nut	3
12	82059	#10-24 x 1/2" Screw	3
13	82068	#10 Flat washer	1
14	82070	1/4" -20 1/2" HHSF Bolt	2
15	82093	5/16" -18 x 1.5" Carriage bolt	2
16	82095	5/16" -18 x 2.5" HHSF Bolt	2
17	82096	5/16" -18 x 3.5" HHCS Bolt	1
18	82608	5/16" Nylon washer	4
19	82668	M4 x 0.7 x 14mm Screw	2
20	82669	M4 x 0.7 Locknut	4
21	82684	Axle washer	2
22	82688	Bolt, M4-0.7 x 20mm HHCS	2
23	82690	Screw, M4-0.7 x 6mm	10
24	82695	Bolt, 3/8" -16 x 3" HHSF	3
25	82699	1/4" Flat washer	4
26	82702	Screw, 1/4" -20 x 28mm	4
27	777110	1/2" Hose clip	1
28	777119	1/2" Hose clamp	1
29	777499	Chemical label	1
30	778383	1/4" NPT - 3/8" HB ELBOW	1
31	784531	Tube insert	1
32	787194	QC x 3/4" HB Fitting	1
33	787197	QC x 1/2" HB elbow fitting	1
34	787198	QC x 3/4" HB elbow fitting	1
35	805323	Rubber bumper	2
36	-	-	-
37	789176	M6 Locknut	8
38	789189	M6 -1.0 x 25mm SHCS	8
39	789835	Inlet filter	1
40	789839	Fitting, 3/4" MBSPP X 3/4" HB	1
41	789840	Fitting, 3/4" FBSPP X 3/4" HB	1
42	2687062	NorthStar 7062 pump	1
43	791443	Regulator	1
44	791465	Pressure gauge	1
45	792422	3/8" HB X 3/8" HB X 3/8" HB Tee	2
46	792424	3/8" X 3/8" HB Ball valve	5
47	792452	NorthStar tank decal	2
48	792611	Lanyard	2
49	792626	Lower hose wrap	1
50	792886	NorthStar tank decal	1
51	792953	Hose, 3/4" Recirculate	1
52	17141	3/4" Hose clamp	4
53	793776	Grommet, 27mm ID	1
54	794111	Sprayer cap w/ tether	1
55	797545	Axle flange	2
56	797593	Check valve	9
57	797599	Wire harness w/ remote switch	1
	791419	Fuse, 25A	
58	797604	Torsional boom spring	2

Ref#	Part#	Description	Qty
59	797616	Hitch mount	1
60	804278	Tank, 101 gallon	1
61	797661	Ball valve bracket	5
62	797662	Tee hose barb, 1/2" x 3/8"	1
63	797698	Boom pivot bracket	2
64	-	-	-
65	797708	3/8" Wire rein. Hose, 483mm	4
66	802555	3/8" Double HB nozzle body	5
67	802556	3/8" Single HB nozzle body	4
68	797717	ISO FanTip cap w/ gasket	9
69	797718	Nozzle, FanTip 110° 0.8 GPM	9
70	797758	Bushing, boom spring	2
71	797759	Boom lock pin	2
72	797791	3/8" Stepless hose clamp	30
73	797792	1/2" Stepless hose clamp	1
74	797815	Cotter pin	2
75	797816	Rubber pad	4
76	797842	Towing decal	1
77	797895	Boom center weldment	1
78	799826	Boom arm weldment, right	1
79A	799821	Boom extension wldt, left	1
79B	799822	Boom extension wldt, right	1
80	797901	Cart base weldment	1
81	797905	Tow bar	1
82	797907	Boom mount, left	1
83	797908	Boom mount, right	1
84	797909	Boom rest	2
85	797910	Axle	1
86	797912	Wheel spacer	2
87	798630	1/2" braided PVC Hose, 650mm	1
88	797916	Draw tube hose	1
89	797917	3/8" Wire rein. Hose, 280mm	1
90	797918	Wheel, 18”	2
91	797919	Suction tube	1
92	799825	Boom arm weldment, left	1
93	797933	Center nozzle hose	1
94	-	-	-
95	798094	Snap bushing	1
96	798096	Boom pivot bracket	2
97	798156	Boom arm lock pin	2
98	798172	Hose, 3/4" PVC	1
99	798335	Grommet, 19mm ID top hat	1
100	798359	Decal, ball valve on/off	5
101	798457	Gun clip	2
102	798465	2-pin connector assembly	1
103	798567	Decal, pinch point	2
104	798573	Spray gun	1
105	798592	Upper hose wrap	1
106	798694	3/8" Wire rein. Hose, 55mm	2
107	799504	Hose clamp, 17.5mm ID	2
108	82155	Zip tie	19
109	797705	Gun hose	1
110	797710	3/8" Wire rein. Hose, 160mm	1
111	797914	Pump power cord	1
112	799499	Right Boom Arm Assembly	1
113	799500	Boom Center Assembly	1
114	799501	Left Boom Arm Assembly	1
115	797709	3/8" Wire rein. Hose, 483mm	2

Pump Exploded View

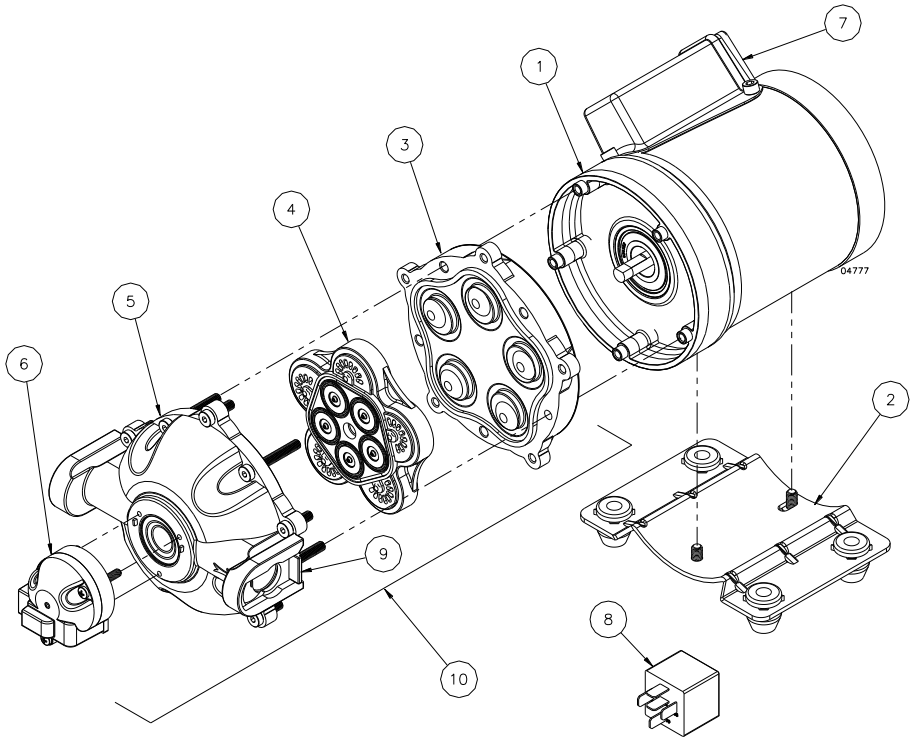

Ref#	Part#	Description	Qty
1	791424	Motor assembly (Includes wire harness and relay)	1
2	790016	Base plate assembly	1
3	788019	Diaphragm assembly	1
4	788015	Valve plate assembly	1
5	787012	Upper housing assembly	1
6	788689	Pressure switch assembly	1
7	789252	Relay	1
8	788929	Relay	1
9	787015	Quick connect clip	2
10	A2687062	Complete pump head assembly	1
N/A	791419	Replacement fuse	1

<u>Any Questions, Comments, Problems or Parts Orders</u>

Call NorthStar Product Support 1-800-270-0810

Appendix A –Broadcast Spray Calibration Tables

Below are some guidelines to help you calibrate your tow behind broadcast sprayer. This is a very important step in operating the tow behind broadcast sprayer such that too much or too little chemical may be applied.

1. Using **Table 1,** find a table that corresponds with the chemical manufacturer's suggested application rate (gallons per acre, gallons per 10,000 sq. ft.).
2. Find the application rate that is closest to the chemical manufacturer's recommendations.
3. The speed to drive your ATV is listed below the application rates.

TABLE 1

SPRAY HEIGHT	PRESSURE (PSI)	**GALLONS PER ACRE –** based on water at 20" spacing						
		2 MPH	**3 MPH**	**4 MPH**	**5 MPH**	**6 MPH**	**8 MPH**	**10 MPH**
20"	30	102.5	68.3	51.2	41.0	34.2	25.6	20.5
20"	40	118.8	79.2	59.4	47.5	39.6	29.7	23.8
20"	50	132.2	88.1	66.1	52.9	44.1	33.0	26.4

SPRAY HEIGHT	PRESSURE (PSI)	**GALLONS PER 10,000 sq.ft. –** based on water at 20" spacing						
		2 MPH	**3 MPH**	**4 MPH**	**5 MPH**	**6 MPH**	**8 MPH**	**10 MPH**
20"	30	23.5	15.7	11.8	9.40	7.86	5.89	4.71
20"	40	27.3	18.2	13.6	10.9	9.11	6.83	5.46
20"	50	30.3	20.2	15.2	12.1	10.13	7.60	6.08

*** Approximate flow from one nozzle**

4. Use **Table 2** to choose the throttle setting on your ATV.

TABLE 2

Speed (MPH)	**Time required in seconds to travel a distance of:**		
	100 ft.	**200 ft.**	**300 ft.**
2	34	68	102
3	23	45	68
4	17	34	51
5	14	28	41
6	11	23	34
8	8.5	17	26
10	6.8	14	20

5. The coverage area can be found by dividing tank size by the application rate.

Example: 100 Gallons divided by 12 gallons/acre = 5.08 acre of coverage per tank.

Limited Warranty

Dear Valued Customer:

Use this product properly and enjoy the benefits from its high performance. By purchasing a NorthStar product, you show a desire for quality and durability. Like all mechanical equipment this unit requires a due amount of care. Treat this unit like the high quality piece of machinery it is. Neglect and improper handling may impair its performance. Please thoroughly read the instructions and understand the operation before using your product. Always contact NorthStar Product Support at 1-800-270-0810 prior to having any service or warranty work performed, as some services performed by parties other than NorthStar approved service centers may void this warranty. This warranty is in lieu of any other warranty expressed or implied and NorthStar assumes no other responsibility or liability outside that expressed within this warranty.

Limited Warranty

NorthStar shall warranty any piece of equipment manufactured, or parts of equipment manufactured, to be free from defects in material or workmanship for a period of:

NorthStar Warranty		
Item #	**Consumer Warranty Period**	**Commercial Warranty Period**
282592	2 years from date of purchase by user	90 days from date of purchase by user

“Consumer use” means personal residential household use by a consumer. “Commercial use” means all other uses, including use for commercial, income producing or rental purposes or when purchased by a business. There is no commercial warranty on this product.

This warranty applies to the original purchaser of the equipment (verification of purchase, in the form of a receipt, is the responsibility of the buyer), is non-transferable, and covers some parts and no labor. Parts will be replaced or repaired at no charge, except when the equipment has failed due to lack of proper maintenance. If a part is no longer available, the part may be replaced with a similar part of equal function. Any misuse, abuse, alteration or improper installation or operations will void warranty. Determining whether a part is to be replaced or repaired is the sole decision of NorthStar. NorthStar will not provide for replacement of complete products due to defective parts. Any costs incurred due to replacement or repair of items outside of a NorthStar approved facility is the responsibility of the buyer and not covered under warranty. Transportation costs to and from service center is the responsibility of the customer.

In addition to the normal warranty, NorthStar shall warrant any normal wear item from defects in material or workmanship for a period of 90 days from the date of purchase by user. Normal wear items include, but are not limited to, pump, hoses, couplers/fittings, tank drain cap, gun, nozzle, on/off switch, decals, wiring, , barbs, tees, fittings, hardware.

This warranty specifically excludes the following; failure of parts due to damage caused by accident, fire, flood, windstorm, acts of God, applications not approved by NorthStar in writing, corrosion caused by chemicals, use of replacement parts which do not conform to manufacturer’s specifications, damage related to rodent and/or insect infestation and damage caused by vandalism. Additional exclusions: loss of running time, inconvenience, loss of income, or loss of use, including any implied warranty of merchantability of fitness for a specific use. Also, outdoor equipment needs periodic parts and service to perform well, and this warranty does not cover instances when normal use has exhausted the life of a component.

This warranty does not cover any personal injury or damage to surrounding property caused by failure of any part. Repair or replacement of parts does not extend the warranty period.

Please fill in the following information and have it on hand when you call in on a warranty claim.

Customer Number: _____

Date of Purchase: _____

NorthStar Serial Number: _____

Item Number: _____



Northern Tool + Equipment Co., Inc.
Burnsville, MN 55306
NorthernTool.com
Assembled in Mexico with foreign components