M2682271M.2

ITEM NUMBER: 2682271, 2682272, 2683061, 2683062, 2684061, 2684062, 2685561, 2685562, 2687061, 2687062, 26811102, 26815151, 26815152

Owner's Manual

Instructions for Assembly, Testing, Operation, Servicing, and Storage

12V Diaphragm Pump: For use with non-potable liquids such as water-based agricultural pesticides and other liquids**

⚠WARNING

READ and UNDERSTAND the Owner's Manual completely before using this pump. Assemble, test, and use only in accordance with the Owner's Manual instructions.

READ and FOLLOW chemical safety instructions. Pesticides are hazardous chemicals.

KNOW emergency procedures BEFORE handling chemicals. Pump leaks, bodily chemical contact, poisoning, and spills require immediate response.

AVOID inhaling, ingesting, or coming into contact with any chemicals.

WEAR personal protective gear when operating, cleaning, and servicing the pump.

KEEP pump and spray materials away from children and pets. Pesticides are especially toxic to them.

DO NOT TURN ON POWER to pump until ready to spray in order to avoid unintentional spray release.
ALWAYS keep a fire extinguisher rated "ABC" nearby.

Improper use of the pump or handling of chemicals could result in serious injury or illness to the operator or nearby persons/animals, or could cause damage to the environment.

**This pump is recommended for use in spraying non-flammable liquids such as pesticides, water for plants/trees or dust control, and water-based non-flammable sealants or stains for outdoor wood surfaces. The pump will be damaged and warranty voided if used to apply bleach, chlorine, ice control chemicals, or any petroleum based product (gasoline, diesel, kerosene, oil). The pump should not be used to transfer any product intended for human consumption. WE RECOMMEND THAT THE PUMP NOT BE USED FOR OTHER PURPOSES ONCE IT HAS BEEN USED FOR SPRAYING PESTICIDES. Any chemical will leave some residual in the pump components, even after the pump has been properly cleaned. These residual chemicals can have unexpected effects on future uses. For example, spraying water or other liquids that are contaminated with residual pesticide may result in unforeseen hazards to plant or animal life. This pump should not be used by people with reduced physical, sensory or mental capabilities or lack of experience and knowledge.

Any Questions, Comments, Problems, or Parts Orders

Call NorthStar Product Support 1-800-270-0810

Hazard Signal Word Definitions

	This is the safety alert symbol. It is used to alert you to potential personal injury hazards. Obey all safety messages that follow this symbol to avoid possible injury or death.
⚠DANGER	DANGER (red) indicates an imminently hazardous situation which, if not avoided, will result in death or serious injury.
⚠WARNING	WARNING (orange) indicates a potentially hazardous situation which, if not avoided, could result in death or serious injury.
⚠CAUTION	CAUTION (yellow) indicates a potentially hazardous situation which, if not avoided, may result in minor or moderate injury.
CAUTION	CAUTION (yellow) used without the safety alert symbol indicates a potentially hazardous situation which, if not avoided, may result in property damage. fig01453

Table of Contents

Intended Use 4

Summary of Important Safety Information 5
- During Assembly
- During Operation
  - General Chemical Safety
  - Chemical Applicator Safety
  - Chemical Accident Procedures

Warning Label Location 7

Installation
- Step One: Mounting 8
- Step Two: Plumbing 8
- Step Three: Connect pump to vehicle battery 9
- Step Four: Check and test completed assembly 11

Operation
- **Important Safety Information - Operation** 12
  - General Chemical Safety
  - Chemical Applicator Safety
  - Chemical Accident Procedures
- **Preparing the Pump for Each Use** 16
- **Using the Pump**
  - Step One: Assess wind conditions and clear work area 17
  - Step Two: Operate the pump 17
  - Step Three: Clean pump and decontaminate after use 19

Storage 20
- Preparing for storage
- Removing from storage

Troubleshooting 21

Specifications 23

Accessories 24

Parts Breakdown – Exploded View 25

Limited Warranty 35

Intended Use

The pump is intended for use in spraying agricultural pesticides and other non-flammable liquids.

SPRAYING PESTICIDES:

Pesticides are hazardous chemicals that must be handled with caution as directed throughout this manual and on the pesticide label. Pesticides are regulated by the United States Environmental Protection Agency (EPA) and defined as:

Any substance or mixture of substances intended for preventing, destroying, repelling, or mitigating any pest. Though often misunderstood to refer only to insecticides, the term pesticide is a comprehensive term that applies to insecticides, herbicides, fungicides, and various other substances used to control pests.

The pump is intended for use in spraying pesticides in liquid form only. The pump is NOT intended for use in spraying pesticides in dry or aerosolized form, or for use with fumigants.

In addition to spraying pesticides, this pump may be used to spray other **non-flammable** liquids. Example uses include watering plants/trees or spraying water for dust control, or applying water-based, **non-flammable** sealant or stain to outdoor wood surfaces.

WE RECOMMEND THAT THE PUMP NOT BE USED FOR OTHER PURPOSES ONCE IT HAS ALREADY BEEN USED FOR SPRAYING PESTICIDES. Any chemical will leave some residual in the pump components, even after the pump has been properly cleaned. These residual chemicals can have unexpected effects on future uses. For example, spraying water or other liquids that are contaminated with residual pesticide may result in unforeseen hazards to plant or animal life.

NOTE: The pump will be damaged and warranty voided if used to apply bleach, chlorine, ice control chemicals, or any petroleum based product (gasoline, diesel, kerosene, oil).

Contact NorthStar Product Support at 1-800-270-0810 for any questions about the appropriate use of the pump and/or optional accessories.

Summary of Important Information

⚠WARNING

Read and understand **this owner's manual** completely before using the pump. Read each **chemical label's instructions** before handling the chemical.

Improper use of the pump or handling of chemicals could result in serious injury or illness for the operator or nearby persons/animals, or cause damage to the environment.

LISTED BELOW is a summary of safety information of particular importance. See individual sections of this owner's manual for more details.

---------- DURING ASSEMBLY----------

- **EXERCISE CAUTION when attaching remote switch to battery terminals**. Follow the steps listed in the Assembly section of this manual i*n exact sequence* when connecting the pump to battery terminals. *Caution must be exercised to avoid contact with battery acid and to prevent sparking.*
- **CHECK and TEST completed assembly** as directed in this manual. Serious injury could result from chemical leaks if pump is improperly assembled.
- **DO NOT MODIFY pump design.**

----------DURING OPERATION----------

General Chemical Safety

- **READ and FOLLOW each chemical label's instructions and warnings**.
- **AVOID inhaling, ingesting, or coming into contact with any chemicals**.
- **KNOW applicable licensing and regulatory requirements** for the chemical you plan to use.
- **KNOW emergency procedures before handling chemicals.** Carefully review "Chemical Accident Procedures" listed below and later in this manual. Also see First Aid instructions on the chemical label.
- **WEAR protective clothing, eye protection, and chemical resistant gloves** when operating the pump. Wear additional protective gear, such as facemask or apron, as recommended on the chemical label.
- **EXERCISE EXTRA CAUTION around children and pets.** Pesticides are especially toxic to them. Keep pump and spray materials away from them at all times.
- **DO NOT MIX OR POUR chemicals in an enclosed, unventilated area**
- **DO NOT USE flammable or corrosive chemicals** in the pump.
- **FLUSH the pump before switching chemicals** in order to prevent dangerous chemical interactions.
- **STORE pesticides in a correctly labeled container and in a secure location**.
- **MONITOR the health of operators frequently exposed to pesticides**, as recommended by the chemical label or local/federal regulations.

Chemical Application Safety

Before Spraying

- **INSPECT and PREPARE pump before each use** as directed in this manual.
- **DO NOT TURN ON POWER to pump until ready to spray** in order to avoid unintentional spray release.
- **DO NOT SPRAY when wind speed exceeds 4 MPH** in order to minimize spray drift.
- **CLEAR work area of people/ pets and POST warning notices** to restrict access for the period recommended on chemical label.
- **KEEP pump and spray materials away from children/pets**. Pesticides can be especially toxic to children and animals.
- **DO NOT ALLOW anyone younger than 16 to operate the pump** since pesticides are especially toxic to children.

During Spraying

- **DO NOT OVER-APPLY pesticide**. Apply at rate recommended by chemical manufacturer. Excess pesticide can be dangerous to humans/animals, damage desirable plants, and contaminate soil and water sources.

Summary of Important Information

- **DO NOT EAT, DRINK, SMOKE, RUB YOUR EYES, or TOUCH YOUR BARE SKIN while handling chemicals and spraying**.
- **NEVER POINT A SPRAY GUN at people or animals.**
- **EXERCISE EXTRA CAUTION when spraying near areas accessible to children and pets**.
- **CLEAN up spills immediately** per instructions on the chemical label.
- **TURN OFF power to pump, and RELIEVE system pressure** before leaving pump unattended.
- **SEE Troubleshooting section of this manual before attempting any repairs**. Wear personal protective equipment and follow safety instructions.

After Spraying

- **CLEAN pump immediately after use** according to the directions provided in this manual.
- **DECONTAMINATE yourself after you are** done spraying and have cleaned the pump. Wash all exposed areas of the body with soap and water, and remove and launder clothing.
- **DISPOSE OF or STORE remaining chemicals in secure storage with correctly marked container**.

Chemical accident procedures

Immediate response is necessary in the event of pump leaks, bodily chemical contact, poisoning, or spills. See instructions below:

Pump leak	**If the pump develops a leak, *immediately stop spraying***. Turn off power to the pump and follow directions below, as applicable.
Bodily chemical contact	**Personal contamination can occur when chemicals splash, spill, or spray directly onto a person.** 1. Immediately follow First Aid instructions on chemical label. General procedures can include: a) Eyes – immediately flush with water. b) Skin – wash all contaminated skin surfaces with soap and water. c) Clothing – remove contaminated clothing. Dispose of heavily contaminated clothing per chemical label instructions. 2. Seek medical advice if instructed on the label or the victim experiences symptoms of harmful effects. Bring the chemical label for reference.
Poisoning by ingestion or inhalation	**In case of poisoning from ingestion or inhalation**: ***If the victim has collapsed or is not breathing, call 911***. Otherwise: 1. If you are the victim, immediately seek assistance from nearby personnel because you may become incapacitated. 2. Immediately follow first aid instructions on chemical label. 3. Call a poison control center for further advice. **In the U.S., call 1-800-222-1222.** Have the chemical label available for reference.
Chemical spills	**Chemical spills must be quickly contained and properly cleaned up.** Refer to the chemical label for any specific clean-up instructions. General procedures include: 1. **Controlling** the spill by stopping the source of the spill. 2. **Containing** the spill so that it does not spread and get into water sources. 3. **Cleaning up** the spill immediately. 4. **Seeking additional advice** from: - *Chemical manufacturer*. See chemical label for contact information. - *State pesticide regulatory agency*. In the U.S., call the National Pesticide Info. Ctr. at 800-858-7378 for assistance in contacting your state's agency.

Warning Label Location

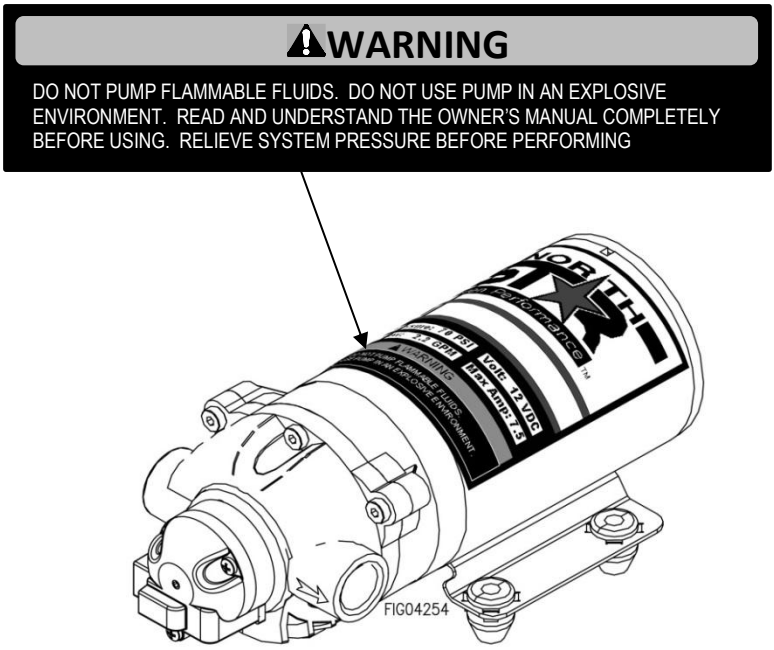

Part#	Description	Model
786974	NSQ SERIES 2271T	2682271
788009	NSQ SERIES 2272Q	2682272
786975	NSQ SERIES 3061T	2683061
788010	NSQ SERIES 3062Q	2683062
786976	NSQ SERIES 4061T	2684061
788011	NSQ SERIES 4062Q	2684062
786977	NSQ SERIES 5561T	2685561
788012	NSQ SERIES 5562Q	2685562
789642	NSQ SERIES 7061T	2687061
789643	NSQ SERIES 7062Q	2687062
798358	NSQ SERIES 11102Q	26811102
797402	NSQ SERIES 15151T	26815151
797405	NSQ SERIES 15152Q	26815152

Always make sure safety labels are in place and in good condition. If a safety label is missing or not legible, order new labels or unsafe operation could result.
To order replacement safety labels, call NorthStar Product Support at **1-800-270-0810.**

Installation

Step One: Mounting

- This NorthStar pump is self-priming.
- The pump should be located in an area that is dry and provides adequate ventilation.

⚠ CAUTION

DO NOT locate the motor near low temperature plastics or combustible material. The surface temperature of the motor may exceed 250°F [121°C].

- The pump may be mounted in any horizontal position. If mounting the pump vertically, the pump head should be in the down position so that in the unlikely event of a leak, fluid will not enter the motor.
- Secure the rubber feet with #10 fasteners (1/4" fasteners for models 2687061 and 2687062). **DO NOT** compress the feet, doing so will reduce their ability to isolate vibration/noise. (Note: fasteners are not included.)

Step Two: Plumbing

- See table below for port size and recommended hose sizes.
  - Remove shipping plugs from pump ports.
  - Use plastic male NPT (Tapered pipe thread) fittings to connect flexible high-pressure tubing to the NPT ported pumps.
  - Use NorthStar quick connect fittings to connect flexible high pressure tubing to the quick connect ported pumps.
  - To insert quick connect fittings, lubricate O-ring with water and twist fitting while inserting into pump port.

Pump Model	Ports	Minimum inlet hose size	Minimum outlet hose size
2682271	3/8" Female NPT	1/2" (13mm) Inside diameter	3/8" (9.5mm) Inside diameter
2682272	3/4" Quick Connect	1/2" (13mm) Inside diameter	3/8" (9.5mm) Inside diameter
2683061	1/2" Female NPT	1/2" (13mm) Inside diameter	1/2" (13mm) Inside diameter
2683062	3/4" Quick Connect	1/2" (13mm) Inside diameter	1/2" (13mm) Inside diameter
2684061	1/2" Female NPT	1/2" (13mm) Inside diameter	1/2" (13mm) Inside diameter
2684062	3/4" Quick Connect	1/2" (13mm) Inside diameter	1/2" (13mm) Inside diameter
2685561	1/2" Female NPT	1/2" (13mm) Inside diameter	1/2" (13mm) Inside diameter
2685562	3/4" Quick Connect	1/2" (13mm) Inside diameter	1/2" (13mm) Inside diameter
2687061	1/2" Female NPT	3/4" (19mm) Inside diameter	3/4" (19mm) Inside diameter
2687062	3/4" Quick Connect	3/4" (19mm) Inside diameter	3/4" (19mm) Inside diameter
26811102	3/4" Quick Connect	3/8" (9.5mm) Inside diameter	3/8" (9.5mm) Inside diameter
26815151	3/8" Female NPT	3/8" (9.5mm) Inside diameter	3/8" (9.5mm) Inside diameter
26815152	3/4" Quick Connect	3/8" (9.5mm) Inside diameter	3/8" (9.5mm) Inside diameter

NOTE: NorthStar does not recommend the use of metal fittings or rigid pipe to plumb the inlet/outlet ports. Standard plastic threaded fittings are available by calling NorthStar Product Support at 1-800-270-0810.

- In some cases, the ports may require a suitable thread sealer applied sparingly. **DO NOT** over-tighten; maximum torque is 45 in.-lb [5 N-m].
- Tubing should be compatible with the spraying fluid. At least 18" [450mm] length is suggested to minimize stress on the fitting/ports and reduce noise. Allow for the shortest possible tubing route and avoid sharp bends that may kink over time.
- Installation of a 50-mesh strainer is recommended to prevent foreign debris from entering the system. Failures due to foreign debris are not covered under the warranty.

NOTE: Restrictions on the inlet may cause a loss in performance. Inlet pressure must not exceed 30 psi [2.1 bar]

- If a check valve is installed in the plumbing, it must have a cracking pressure of no more than 2 psi [.14 bar].

⚠ CAUTION

Sealers and Teflon tape may act as lubricant causing cracked housings or stripped threads due to over tightening. Care should be used when applying sealers; it may enter the pump inhibiting valve action, causing no prime or no shut-off. Failures due to foreign debris are not covered under the warranty.

Installation (continued)

Step Three: Connect pump to battery or 12V supply

⚠ WARNING

Batteries are hazardous because they contain caustic acid, can emit explosive gases, and can cause electric shock.

Caution must be exercised when making connections to a battery to avoid shock and contact with the acid, and to prevent any sparking that could lead to an explosion.

ALWAYS follow the safety instructions and steps listed below i*n exact sequence* when connecting the pump to the battery terminals.

1. Preparatory safety

Preparatory safety steps:

- ALWAYS use eye protection
- NEVER smoke or work near sparks or other sources of ignition.
- NEVER touch both battery terminals at the same time or with any non-insulated tools.
- If battery acid contacts skin or clothing, flush immediately with water and neutralize with baking soda.

2. Electrical requirements

- The pump should be on a dedicated (individual) circuit, controlled with a double pole switch (UL/CSA certified) rated at or above the fuse ampere indicated by the pump motor label. Depending on distance of the power source from the pump and ampere load on the circuit, wire may need to be heavier than indicated by the chart.
- The pump is **protected with a fuse**. Use an approved wire of the size specified or heavier.

Voltage	Model	Fuse (amp)	Wire Leads	Wire Size (Stranded MTW)
12 VDC	2682271 2682272	15.0	RED (positive +) BLACK (negative -)	#14 AWG (2.5mm^2) (or heavier)
12 VDC	2683061 2683062 2684061 2684062	15.0	RED (positive +) BLACK (negative -)	#14 AWG (2.5mm^2) (or heavier)
12 VDC	2685561 2685562	20.0	RED (positive +) BLACK (negative -)	#14 AWG (2.5mm^2) (or heavier)
12 VDC	2687061 2687062	25.0	RED (positive +) BLACK (negative -)	#12 AWG (4.0mm^2) (or heavier)
12 VDC	26811102	10.0	RED (positive +) BLACK (negative -)	#14 AWG (2.5mm^2) (or heavier)
12 VDC	26815151 26815152	15.0	RED (positive +) BLACK (negative -)	#14 AWG (2.5mm^2) (or heavier)

Installation (continued)

3. Connect pump to battery

Connect the pump to a 12V DC battery using the following procedure:

a) Disconnect the vehicle battery ground wire.
b) Connect the pump's ***red*** wire to the ***positive*** **(+)** terminal of the battery.
c) Connect the pump's ***black*** wire to the ***negative*** **(-)** terminal of the battery.
d) Reconnect the vehicle battery ground wire.

Note: Skip steps (a) and (d) if battery is not in a vehicle.

WARNING: Always connect in this sequence to avoid possible shock.

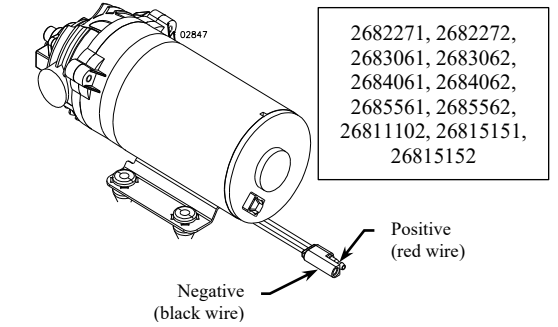

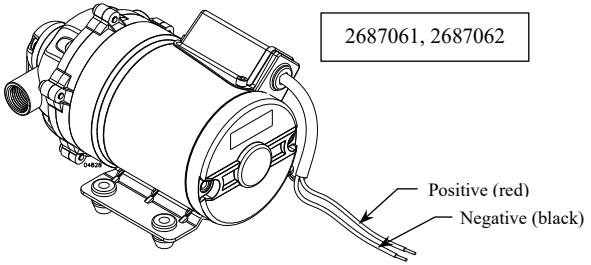

4. Disconnect after use

AFTER EACH USE, disconnect power to the pump using the following procedure:

a) Disconnect the vehicle battery ground wire.
b) Disconnect the pump's ***black*** wire from the ***negative*** **(-)** terminal of the battery.
c) Disconnect the pump's ***red*** wire from the ***positive*** **(+)** terminal of the battery.
d) Reconnect the vehicle battery ground wire.

Note: Skip steps (a) and (d) if battery is not in a vehicle.

WARNING: Always disconnect in this sequence to avoid possible shock.

NOTE: It is important to disconnect power to the pump when not in use for safety reasons. ALWAYS verify that the power has been disconnected before adding chemicals or servicing.

A remote switch is recommended for temporarily shutting off the pump's operation.
Call NorthStar Product Support at 1-800-270-0810 to order NorthStar Item #94992.

Installation (continued)

Step Four: Check and test completed assembly.

⚠WARNING

Check and test completed assembly

Serious injury could result from chemical leaks if pump is improperly assembled or the design of the pump is modified.
Follow the steps below to ensure the pump is properly assembled. Never modify the pump design.

1. Check assembly	**Check assembly to assure the pump is properly assembled and in safe working condition:**
2. Test with water	**Test the system for leaks with water:** a) Fill the tank with water. b) The pump is an "on demand" pump. When turned on, the pump will prime itself, then turn off once reaching pressure. When the flow continues, the pump will automatically re-start. c) Check for leaks throughout the system. If a leak is detected, fix the leak and re-test the system with water.

Operation – Important Safety Information

Now that you have completed and tested your assembly, there is some important safety and health information you need to know with regard to handling and spraying chemicals.

⚠ WARNING

Carefully read and make sure you understand the following safety information before using the pump.

General Chemical Safety:

⚠ WARNING

Pesticides are hazardous chemicals.

Heed the warnings below and follow all instructions carefully.

Improper handling of chemicals can result in serious injury or illness, or cause damage to the environment.

- **Chemical label**. ALWAYS READ and FOLLOW all chemical label instructions.
- **Licensing/regulation**. Refer to any applicable licensing restrictions or state/federal regulations with regard to the application of the particular chemical you plan to use.
- **Emergency procedures**. Before handling chemicals, carefully review the "Chemical Accident Procedures" listed later in this section, as well as the "Statement of Practical Treatment" on the chemical label.
- **Inhalation/contact**. ALWAYS take precautions to avoid inhaling or coming into contact with the chemical.
- **Personal protective equipment**. ALWAYS wear protective clothing, eye protection, and chemical-resistant gloves when operating and cleaning the pump. Wear additional protective gear (such as facemask or apron) as recommended on the chemical label.
- **Children/pets**. Pesticides can be especially toxic to children and animals. ALWAYS exercise extra caution around children. Keep pump and all spray materials away from children and animals.
- **Ventilation**. ALWAYS ensure there is adequate ventilation when mixing, pouring, or spraying.
- **Flammables**. NEVER use any flammable chemicals in the pump.
- **Corrosives**. DO NOT use corrosive chemicals in the pump. They can weaken the pump and its parts, resulting in leaks. Check with the chemical manufacturer to ensure chemical is compatible with all components of the pump.
- **Chemical interaction**. ALWAYS flush the pump before switching chemicals. Different chemicals may interact dangerously with each other.
- **Chemical storage**. ALWAYS store pesticides in a properly labeled container and in a secure location per the manufacturer's recommendations.
- **Health monitoring**. Monitor the health of operators who are frequently exposed to pesticides, as recommended by the chemical label or local/federal regulations.

Operation – Important Safety Information (continued)

Chemical Application Safety:

⚠ WARNING

Caution must be used when spraying chemicals to avoid unsafe exposure to humans and the environment.
Heed the warnings below and follow all instructions carefully.

Before Spraying

- **Pump prep**. ALWAYS inspect and prepare the pump before use according to the directions provided in this manual.
- **Keep pump off**. Do not turn on power to the pump until ready to spray in order to avoid unintentional spray release.
- **Wind speed**. NEVER spray when wind speed exceeds 4 MPH in order to minimize spray drift.
- **Clear area/post**. ALWAYS keep the work area clear of people and pets. POST warning notices to restrict access by the public for the period recommended on chemical label.
- **Operator age**. You must be 16 years of age or older to operate this pump. Pesticides are especially toxic to children.

During Spraying

- **Over-application**. DO NOT over-apply pesticide. Apply at a rate recommended by chemical manufacturer. Excess pesticide can be dangerous to humans, damage desirable plants, and contaminate soil and water sources.
- **Children/pets**. ALWAYS exercise extra caution when spraying near areas accessible to children and pets.
- **Eating/smoking**. DO NOT eat, drink, smoke, rub your eyes, or touch any part of your bare skin while handling chemicals and spraying.
- **Heat/flames**. DO NOT spray near open flames or sources of heat.
- **Spills**. ALWAYS clean up spills immediately per instructions on the chemical label.
- **Unattended**. ALWAYS turn off power to pump, and relieve system pressure before leaving pump unattended.
- **Troubleshooting**. ALWAYS refer to the safety instructions in the Troubleshooting Section before attempting any repairs.

After Spraying

- **Clean pump**. ALWAYS clean the pump immediately after use according to the directions provided in this manual.
- **Decontaminate**. ALWAYS decontaminate yourself immediately after you are finished spraying and handling chemicals. Wash all exposed areas of the body with soap and water and remove and launder clothing.
- **Chemical disposal/storage**. ALWAYS dispose of or store remaining chemicals properly as recommended on the chemical label.

Chemical accident procedures:

⚠WARNING

Before you use the pump, review the following information with regard to handling accidents.
Chemical spills, pump leaks, personal contamination, and poisoning are accident situations which you may encounter.
All require an immediate response – See instructions below.

Pump leak	**In the event that the pump develops a leak while spraying chemicals, you must *immediately stop spraying*.** Turn off power to the pump and follow the directions below, as applicable.
Bodily chemical contact	**Personal contamination can occur when chemicals splash, spill, or spray directly onto a person.** 1. Follow the emergency first aid instructions on the chemical label listed in the "First Aid" or "Statements of Practical Treatment" section. General procedures include: a) Eyes – immediately flush with water or follow other directions as specified on the chemical label. b) Skin – immediately wash all contaminated skin surfaces with soap and water, or follow directions as specified on the chemical label. c) Clothing – remove contaminated clothing immediately. Dispose of heavily contaminated clothing per the instructions on the chemical label for safe chemical/container disposal. 2. Seek medical advice if instructed on the label, or if the victim experiences symptoms of harmful effects such as burning, swelling, nausea, chest pain, difficulty breathing, dizziness or confusion. When seeking medical advice, be sure to bring the chemical product label.
Poisoning by ingestion or inhalation	**In case of poisoning from ingestion or inhalation**: IF THE VICTIM HAS COLLAPSED OR IS NOT BREATHING, ***CALL 911***. Otherwise: 1. If you are the victim, immediately seek assistance from nearby personnel because you may become incapacitated. 2. Follow the emergency first aid instructions on the chemical label in the "First Aid" or "Statement of Practical Treatment" section. 3. Call a poison control center for further advice. **In the U.S., call 1-800-222-1222 to be automatically linked to the nearest certified poison control center.** Have the chemical label available for reference.
Chemical spills	**Chemical spills must be quickly contained and properly cleaned up.** Refer to the chemical label for any specific clean-up instructions with regard to the chemical spilled.

General procedures include:

1. **Control** the spill by stopping the source of the spill. If the source of the spill is a container leak, place the leaking container in a larger, watertight container. Keep unprotected people away from the spill site.
2. **Contain** the spill so that it does not spread and get into water sources. Use a shovel or other tool to make a dike around the spill with soil, sod, or absorbent material.
3. **Clean up** the spill immediately -- Absorbent materials like ground corncobs or pet litter should be spread on the spill area to soak up the pesticide. The contaminated material should then shoveled into a leak-proof container. Do not flush the spill area with water until you receive advice as directed below.
4. **Seek additional advice** from the chemical manufacturer and your state's pesticide regulatory agency regarding decontamination of the spill site:
   - *Chemical manufacturer*. The chemical label provides contact information for the chemical manufacturer.
   - *State pesticide regulatory agency*. In the U.S., call the National Pesticide Information Center at 1-800-858-7378 for assistance in determining how to contact your state's pesticide regulatory agency.

Operation – Preparing the Pump for Each Use

If the pump has been used previously, it must be prepared BEFORE EACH SUBSEQUENT USE.

⚠ WARNING

Read instructions below carefully for inspecting and preparing the pump.

Damaged or clogged equipment could result in leaks or uncontrolled spray.

Leaks could result in injury to the operator or bystanders from chemical exposure, or cause damage to the environment.

Important safety rules:

- **Power off.** Make sure all power is OFF before cleaning, inspecting, or servicing the pump.
- **Guards / shields.** Make sure all guards and shields are replaced after servicing the pump.
- **Replacement parts.** If a part needs replacement, only use parts that meet the manufacturer's specifications. Replacement parts that do not meet specifications may result in a safety hazard or poor operation of the sprayer.

1. Ensure clean system	**Ensure the pump has been thoroughly flushed and drained of all residual chemicals from prior uses.**
2. Inspect & repair	**Inspect and test the sprayer thoroughly**: a) Inspect hoses/ lines for exposed mesh and holes. Replace all worn or damaged hoses/ lines. b) Inspect fittings for cracks and leaks. Replace all damaged fittings with original NorthStar parts. c) Partially fill system with plain water and spray to test for leaks. Repair as needed. ***IMPORTANT: After any repair work has been done, ALWAYS test for leaks with water one final time before using.***

Be certain the pump materials will be compatible with the chemical being pumped. NorthStar pumps are intended for intermittent or continuous duty when the proper operating criteria are met. If unsure of the chemical compatibility with the NorthStar pump components or the motor's intended design, please call NorthStar Product Support at 1-800-270-0810 for assistance.

Operation – Using the Pump

Step One: Assess wind conditions and clear work area.

Before you decide to spray, you must determine whether wind conditions are suitable. You must also restrict access to the work area to ensure the safety of bystanders.

⚠ WARNING

Do not spray if wind speeds are greater than 4 MPH or if there are bystanders in the intended spray area.

1. Assess wind speed	**Assess weather conditions to ensure that it is not too windy to spray.** **DO NOT SPRAY if wind speeds are greater than 4 MPH.** *Visible indication of wind speed*: If leaves are in constant motion or there is any branch movement, DO NOT spray because the wind is too strong.
2. Clear work area	**Clear the work area of all bystanders and pets.** Restrict access by the public for the period recommended on chemical label.

Step Two: Operate the pump.

⚠ WARNING

ALWAYS wear personal protective equipment as directed on the chemical label when spraying.

Long pants and sleeves, chemical-resistant gloves, and eye protection are strongly recommended. Additional protective gear may be required depending on the particular pesticide.

1. Review safety information	**Review the "Operation – Important Safety Information"** related to Chemical Application Safety provided in this manual.
2. Wear personal protective equipment	**Wear personal protective equipment as directed on the chemical label.**
3. Turn on power	**Turn on the power to the pump.** *Note: The pump will start automatically when power is turned on. The pump will cycle on and off as needed to retain pressure in the hose.*

Operation – Using the Pump (continued)

4. Pressure Switch Operation	The pressure switch reacts to outlet pressure, and interrupts power at the preset shut-off pressure indicated on the pump label. When outlet pressure drops below a predetermined limit the switch will close and the pump operates until the shut-off pressure is achieved. The shut-off pressure is set to factory calibrated standards. *Note: If the plumbing is restrictive or the flow rate is very low, the pump may re-pressurize the outlet faster than the fluid is being released, causing rapid cycling (*ON/OFF within 2 seconds). If the pump is subjected to rapid cycling during normal operation, or for infrequent periods, damage may occur. Applications which exhibit rapid cycling should have restrictions in the outlet minimized.*
5. Leaving unattended	**If the pump must be left unattended at any time**: a) Disconnect power to the pump. b) Relieve system pressure.
6. Discontinue use if clogged or inoperative	**If the pump becomes clogged or inoperative during use, *discontinue use immediately*.** - DO NOT attempt to service while chemicals are in the pump and power is connected. - Return to service area to review instructions for troubleshooting before attempting to service.

CAUTION

DO NOT operate the pump at pressures which cause the motor to exceed the amperes rating indicated on the name plate.

Improper adjustment of the pressure switch setting may cause severe overload or premature failure. Failures due to improper adjustment of the pressure switch setting will not be covered under the warranty.

Note: *A reserve, clean container capable of holding at least the volume of the entire pump system should be kept for use when the pump system needs to be emptied temporarily for repairs. It is advisable to purchase a reserve tank suitable for pesticide storage from Northern Tool and Equipment for use in these circumstances. The container should be properly labeled as to its contents if it is used.*

Operation – Using the Pump (continued)

Step Three: Clean pump and decontaminate after use.

When done using the sprayer, it is important to clean the pump and decontaminate yourself. Do not store the pump when saturated with chemicals, as it is unsafe and could also result in damage to the equipment.

⚠ WARNING

Cleanup and decontamination procedures must be followed after each use.

Improper equipment cleanup and disposal of chemicals can result in dangerous chemical exposure to humans and the environment, as well as equipment damage.

Personal decontamination is required after spraying to minimize unsafe exposure to chemicals and potential illness.

1. Drain pump system	**If there is excess pesticide left in the pump system, drain the pump system:** a) Disconnect power to the pump and relieve system pressure. b) Find a suitable container in which to drain the unused pesticide. c) While wearing rubber gloves, eye protection, and all other required personal protective equipment, allow pesticide to drain into container.
2. Unused chemical	**Properly store or dispose of unused chemical:** a) If the unused pesticide is to be stored for future use: Store all unused pesticide in its original, or a suitably marked, container in a secure location out of the reach of children & animals. b) If remaining pesticide is to be disposed: **Properly dispose of the remaining chemical and its container per the chemical manufacturer's recommendation and according to local hazardous waste disposal regulations.**
3. Flush pump	**Flush the pump per the chemical manufacturer's recommendations.** A general procedure is as follows: a) Add fresh water to the pump system. b) Reconnect power to the pump. c) Operate the pump system and discharge all rinse water onto an area that can accept dilute pesticide application. d) Add 5 gallons of the chemical manufacturer's recommended cleaning solution. Operate the pump system, collecting the discharged solution if recommended by the manufacturer. e) After flushing, disconnect power to the pump and be sure all system pressure is relieved. f) Dispose of cleaning solution discharge as recommended by the manufacturer of the solution.
4. Decontaminate & launder	**Decontaminate yourself after you are finished handling chemicals:** a) Remove all clothing worn during spraying and chemical handling. b) Wash all exposed parts of the body with soap and water. c) Launder clothing separately from other wash.

Storage

When not in use, store the sprayer indoors.

For long term or winter storage, prepare the sprayer by running RV antifreeze through the system. This will keep internal parts lubricated, protect against corrosion, and keep the unit from freezing.

CAUTION
The pump will be damaged if it freezes. Protect the pump from freezing during storage by following the instructions below.

Preparing for storage:

1. Add antifreeze	Pour RV antifreeze into the pump system. *Note: RV antifreeze is non-toxic and biodegradable and generally safer for the environment than automotive antifreeze.*
2. Spray briefly	Turn on the pump and run the pump system briefly until fluid sprays.

Removing from storage:

1. Drain	Drain the antifreeze left in the pump system into a suitable container.
2. Flush with water	Fill the pump system with fresh water and run through the system. Operate the pump system until the system is completely flushed. Be sure to set up containers to capture the antifreeze flush water.
3. Disposal	Dispose of the antifreeze and flush water properly.

Troubleshooting

⚠WARNING

Before troubleshooting or attempting to service, read the following safety rules to avoid accidental exposure to chemical and also risk of electric shock.

Note: *A reserve, clean container capable of holding at least the volume of the entire pump system should be kept for use when the pump system needs to be emptied temporarily for repairs. It is advisable to purchase a reserve tank suitable for pesticide storage from Northern Tool and Equipment for use in these circumstances. The container should be properly labeled as to its contents if it is used.*

Before attempting to service the pump:

1. Personal protective equipment	**Wear personal protective equipment as directed on the chemical label while servicing your pump.**
2. Review troubleshooting table	**Review the Troubleshooting Table below for the type of problem you are experiencing.** However, DO NOT attempt to repair until the steps listed below are followed.
3. Empty and flush	**Empty the pump system and flush the pump with water as directed in the section, "Operation—Step Three."** *- In order to avoid accidental exposure to chemicals, never attempt to service the pump until the pump system has been emptied and the pump flushed with water.*
4. Disconnect power/relieve pressure	**Disconnect power to the pump and be sure all system pressure is relieved.**
5. Perform repairs	**Follow the directions provided in the troubleshooting table to repair the pump.**
6. Test after servicing	**After servicing, ALWAYS test the pump for leaks with plain water before using.**

Troubleshooting (continued)

PROBLEM	CAUSE	SOLUTION
Pump will not turn on	Bad electrical connection	Check battery connections
	Short in wires	Check condition of wires
	Fuse blown	Replace fuse
	Locked drive	Replace diaphragm assembly
	Faulty pressure switch	Replace pressure switch assembly
	Incorrect voltage	Check voltage (±10%)
Pump will not prime	Out of product	Refill supply container
	Inlet air leak	Tighten fittings/ Replace cracked fittings
	Inlet/ Outlet tube restriction	Remove restriction
	Incorrect voltage	Check voltage (±10%)
	Clogged intake valves	Remove obstruction
	Clogged intake tube	Remove obstruction
Low pressure/ flow	Inlet air leak	Tighten fittings/ Replace cracked fittings
	Worn diaphragm	Replace diaphragm assembly
	Worn valves	Replace valve plate assembly
	Inlet/ Outlet tube restriction	Remove restriction
	Incorrect voltage	Check voltage (±10%)
	Clogged intake valves	Remove obstruction
	Clogged intake tube	Remove obstruction
Pump leaks	Loose fasteners	Tighten fasteners
	Pump seals degraded	Replace pump head assembly
	Leak in diaphragm	Replace diaphragm assembly
Pump cycles while not spraying	Leak in the system	Tighten leaking hose clamps/ fittings
	Faulty pressure switch	Replace pressure switch assembly
	Incorrect voltage	Check voltage (±10%)
	Air trapped in system	Purge the air from the system
Rough operation	Flexible mounting surface	Mount pump on rigid surface
	Loose pump head	Tighten fasteners
	Compressed base feet	Decompress base feet
	Rigid plumbing	Plumb pump with flexible plumbing

Specifications

Model Number	Electrical connection	Maximum amp draw	Maximum flow	Maximum pressure	Ports	Overall dimensions	Weight
2682271	12 VDC	8 Amps	2.2 GPM [8.3 LPM]	70 PSI [4.8 bar]	3/8" Female NPT	9"x 4"x 4" [230mm x 102mm x 102mm]	4.9 lbs. [2.22 kg]
2682272	12 VDC	8 Amps	2.2 GPM [8.3 LPM]	70 PSI [4.8 bar]	3/4" Quick connect	9"x 4"x 4" [230mm x 102mm x 102mm]	4.9 lbs. [2.22 kg]
2683061	12 VDC	10 Amps	3.0 GPM [11.4 LPM]	60 PSI [4.1 bar]	1/2" Female NPT	9"x 5.5"x 5" [230mm x 140mm x 127mm]	6 lbs. [2.7 kg]
2683062	12 VDC	10 Amps	3.0 GPM [11.4 LPM]	60 PSI [4.1 bar]	3/4" Quick connect	9"x 5.5"x 5" [230mm x 140mm x 127mm]	6 lbs. [2.7 kg]
2684061	12 VDC	13 Amps	4.0 GPM [15.1 LPM]	60 PSI [4.1 bar]	1/2" Female NPT	9"x 5.5"x 5" [230mm x 140mm x 127mm]	6 lbs. [2.7 kg]
2684062	12 VDC	13 Amps	4.0 GPM [15.1 LPM]	60 PSI [4.1 bar]	3/4" Quick connect	9"x 5.5"x 5" [230mm x 140mm x 127mm]	6 lbs. [2.7 kg]
2685561	12 VDC	17 Amps	5.5 GPM [20.8 LPM]	60 PSI [4.1 bar]	1/2" Female NPT	9"x 5.5"x 5" [230mm x 140mm x 127mm]	6 lbs. [2.7 kg]
2685562	12 VDC	17 Amps	5.5 GPM [20.8 LPM]	60 PSI [4.1 bar]	3/4" Quick connect	9"x 5.5"x 5" [230mm x 140mm x 127mm]	6 lbs. [2.7 kg]
2687061	12 VDC	23 Amps	7.0 GPM [26.5 LPM]	60 PSI [4.1 bar]	1/2" Female NPT	9.2"x5.6"x5.5" [233mm x 143mm x 139mm]	9.5 lbs. [4.3 kg]
2687062	12 VDC	23 Amps	7.0 GPM [26.5 LPM]	60 PSI [4.1 bar]	3/4" Quick connect	9.2"x5.6"x5.5" [233mm x 143mm x 139mm]	9.5 lbs. [4.3 kg]
26811102	12 VDC	6.5 Amps	1.1 GPM [4.2 LPM]	100 PSI [6.9 bar]	3/4" Quick connect	7.9"x 3.9"x 3.1" [200mm x 100mm x 79mm]	2.9 lbs. [1.3 kg]
26815151	12 VDC	10.5 Amps	1.5 GPM [5.7 LPM]	150 PSI [10.3 bar]	3/8" Female NPT	9"x 4"x 4" [230mm x 102mm x 102mm]	5.2 lbs. [2.35 kg]
26815152	12 VDC	10.5 Amps	1.5 GPM [5.7 LPM]	150 PSI [10.3 bar]	3/4" Quick connect	9"x 4"x 4" [230mm x 102mm x 102mm]	5.2 lbs. [2.35 kg]

Component Materials*

Pump Head..... Polypropylene, Viton®, Stainless Steel
Diaphragm……. Santoprene™
Valves..... Viton®, Polypropylene

*Before using any chemical, check to ensure the chemical is compatible with all materials in the system.

The noise emissions from this product do not exceed 70 dB(A).

Note:
The sprayer pump is not compatible with bleach, chlorine or ice control chemicals. Also, pumping any petroleum based fluid (gasoline, diesel, kerosene, oil) will severely damage the pump.

The manufacturer reserves the right to make improvements in design and/or changes in specifications at any time without incurring any obligation to install them on units previously sold.

Any Questions, Comments, Problems or Parts Orders
Call NorthStar Product Support 1-800-270-0810

Accessories

Model #s 2682272, 2683062, 2684062, 2685562, 2687062, 26811102, 26815152

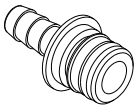

Quick Connect x 3/8" Hose barb
Part # 787208

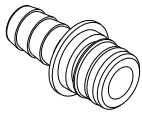

Quick Connect x 1/2" Hose barb
Part # 787209

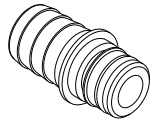

Quick Connect x 3/4" Hose barb
Part # 787210

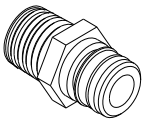

Quick Connect x 1/2" MNPT
Part # 787211

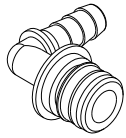

Quick Connect x 3/8"
Hose
barb elbow

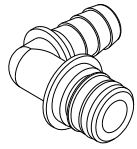

Quick Connect x 1/2" Hose
barb elbow
Part # 787213

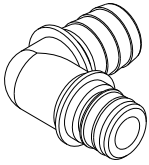

Quick Connect x 3/4" Hose
barb elbow
Part # 787214

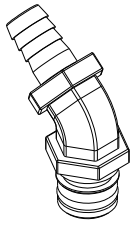

Quick Connect x 1/2" Hose barb,
50° elbow
Part # 787215

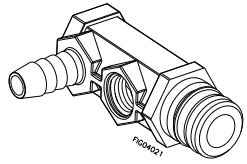

Quick Connect x 3/8" hose barb
elbow x 1/4" FNPT elbow
Part # 787216

Part#	Description	Included with Model	Qty
787211	Quick Connect x 1/2" MNPT	2682272, 2683062, 2684062, 2685562, 2687062, 26815152	1
787208	Quick Connect x 3/8" Hose barb	26811102, 26815152	2
		2682272	1
787209	Quick Connect x 1/2" Hose barb	2682272, 2683062, 2684062	1
787210	Quick Connect x 3/4" Hose barb	2685562, 2687062	1
787214	Quick Connect x 3/4" Hose barb elbow	2687062	1

*Additional Quick Connect fittings are listed below. Call Northstar Product Support at 1-800-270-0810 to order. All Quick Connect fittings are compatible with 2681042, 2682272, 2683062, 2684062, 2685562, and 2687062.

Part#	Description
787212	Quick Connect x 3/8" Hose barb elbow
787213	Quick Connect x 1/2" Hose barb elbow
787215	Quick Connect x 1/2" Hose barb 50° elbow
787216	Quick Connect x 3/8" Hose barb elbow x 1/4" FNPT elbow

Exploded View – 2682271 – Rev M.2

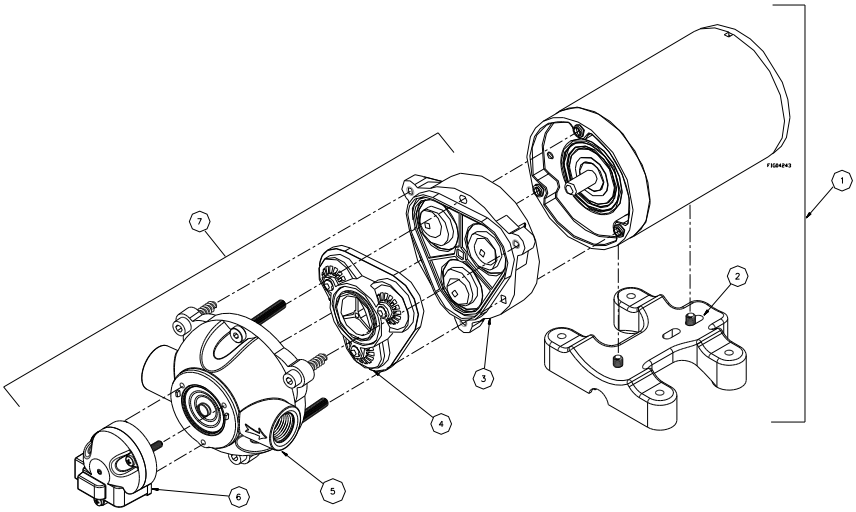

Ref#	Part#	Description	Qty
1	807120	Motor assembly	1
2	800428	Base plate assembly	1
3	807122	Diaphragm assembly	1
4	807123	Valve plate assembly	1
5	807124	Upper housing assembly	1
6	788026	Pressure switch assembly	1
7	A2682271	Complete pump head assembly	1
N/A	787381	Replacement fuse	1

Exploded View – 2682272 – Rev M.2

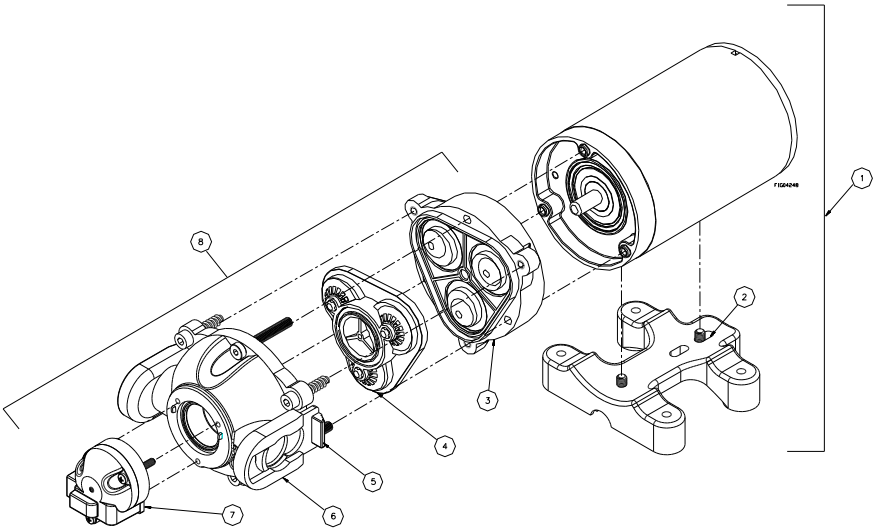

Ref#	Part#	Description	Qty
1	807120	Motor assembly	1
2	800428	Base plate assembly	1
3	807122	Diaphragm assembly	1
4	807123	Valve plate assembly	1
5	784449	Quick connect clip	2
6	807125	Upper housing assembly	1
7	788026	Pressure switch assembly	1
8	A2682272	Complete pump head assembly	1
N/A	787381	Replacement fuse	1

Exploded View – 2683061, 2684061, 2685561 – Rev M.2

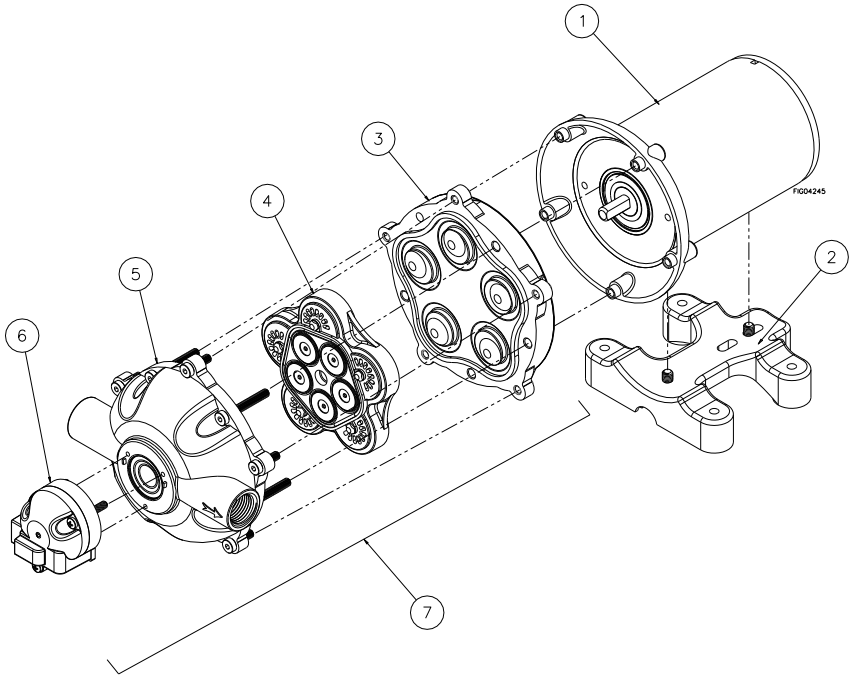

Ref#	Part#	Description	Model	Qty
1	807175	Motor assembly	2683061	1
	807176		2684061	
	807176		2685561	
2	800428	Base plate assembly	All	1
3	807182	Diaphragm assembly	2683061	1
	807183		2684061	
	807184		2685561	
4	807187	Valve plate assembly	All	1
5	807190	Upper housing assembly	All	1
6	788690	Pressure switch assembly	All	1
7	A2683061	Pump head assembly	2683061	1
	A2684061		2684061	
	A2685561		2685561	
N/A	787381	Replacement fuse	2683061	1
	791416	Replacement fuse	2684061	1
			2685561	1

Exploded View – 2683062, 2684062, 2685562 – Rev M.2

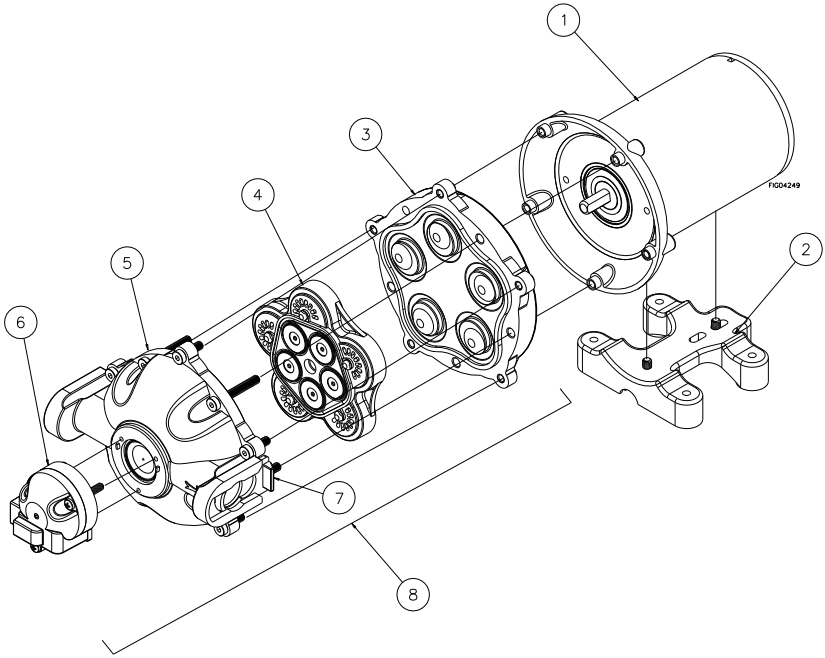

Ref#	Part#	Description	Model	Qty
1	807175	Motor assembly	2683062	1
	807176		2684062	
	807176		2685562	
2	800428	Base plate assembly	All	1
3	807182	Diaphragm assembly	2683062	1
	807183		2684062	
	807184		2685562	
4	807187	Valve plate assembly	All	1
5	807191	Upper housing assembly	All	1
6	788690	Pressure switch assembly	All	1
7	784449	Quick connect clip	All	2
8	A2683062	Pump head assembly	2683062	1
	A2684062		2684062	
	A2685562		2685562	
N/A	787381	Replacement fuse	2683062	1
	791416	Replacement fuse	2684062	1
			2685562	1

Exploded View – 2687061 – Rev M.2

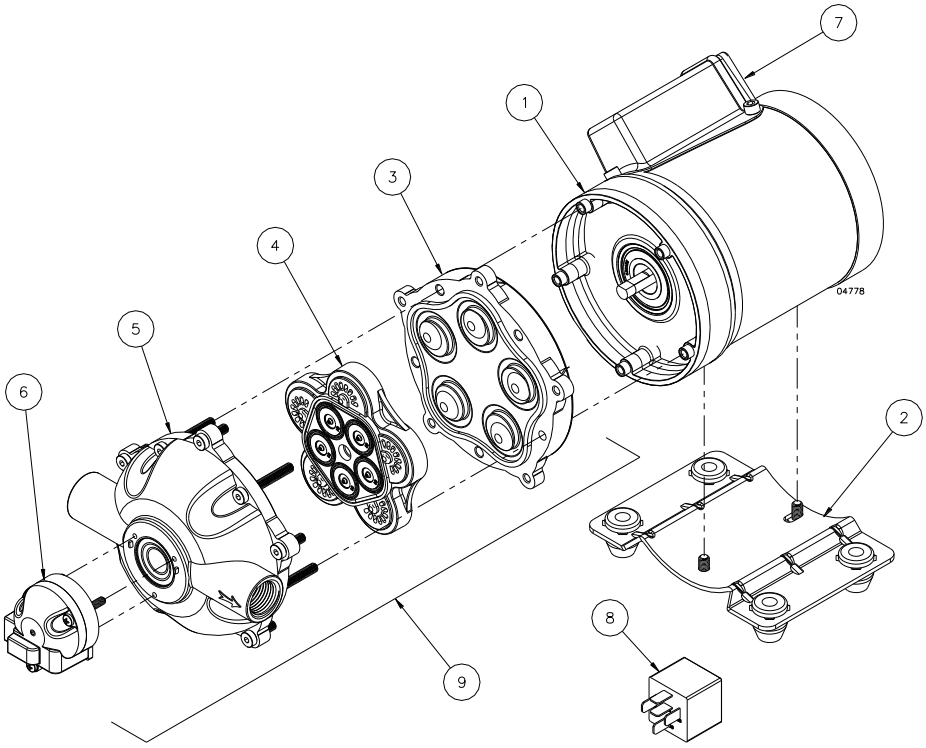

Ref#	Part#	Description	Qty
1	807177	Motor assembly (Includes wire harness and relay)	1
2	790109	Base plate assembly	1
3	807184	Diaphragm assembly	1
4	807187	Valve plate assembly	1
5	807190	Upper housing assembly	1
6	788690	Pressure switch assembly	1
7	789252	Relay cover	1
8	801642	Relay	1
9	A2687061	Complete pump head assembly	1
N/A	791419	Replacement fuse	1

Exploded View – 2687062 – Rev M.2

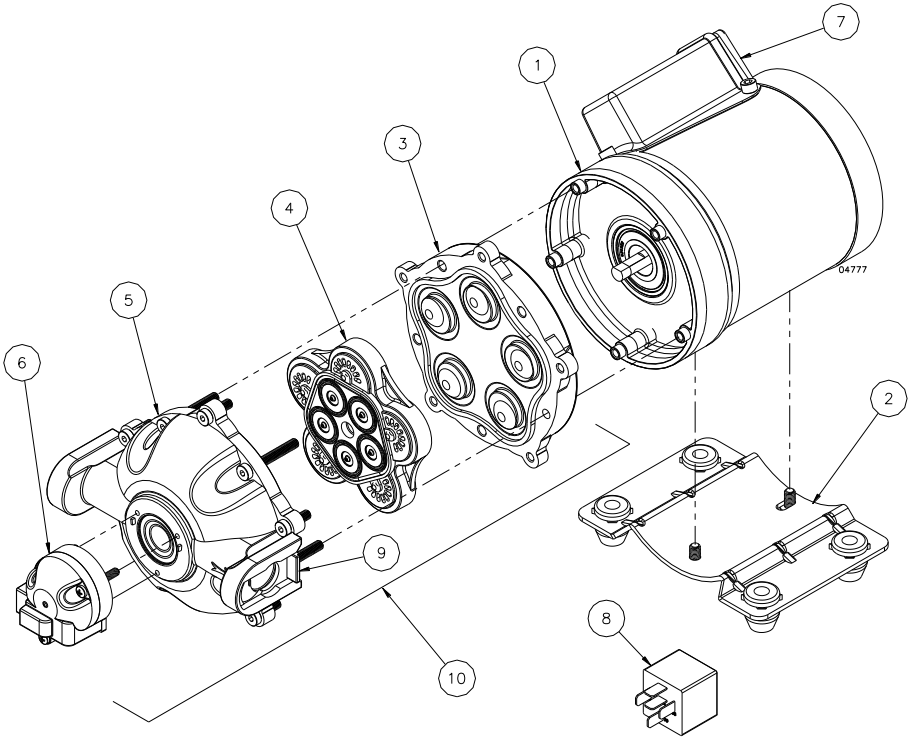

Ref#	Part#	Description	Qty
1	807177	Motor assembly (Includes wire harness and relay)	1
2	790109	Base plate assembly	1
3	807184	Diaphragm assembly	1
4	807187	Valve plate assembly	1
5	807191	Upper housing assembly	1
6	788690	Pressure switch assembly	1
7	789252	Relay cover	1
8	801642	Relay	1
9	784449	Quick connect clip	2
10	A2687062	Complete pump head assembly	1
N/A	791419	Replacement fuse	1

Exploded View – 26811102 – Rev M.2

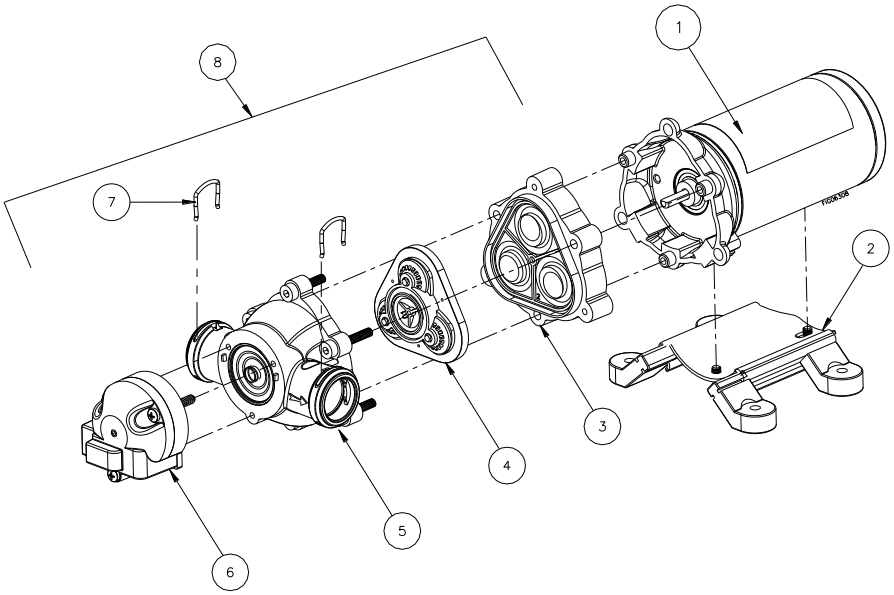

Ref#	Part#	Description	Qty
1	807178	Motor assembly	1
2	798373	Base plate assembly	1
3	807185	Diaphragm assembly	1
4	807188	Valve plate assembly	1
5	807192	Upper housing assembly	1
6	806904	Pressure switch assembly	1
7	804264	Quick connect clip	2
8	A26811102	Complete pump head assembly	1
N/A	787380	Replacement fuse	1

Exploded View – 26815151 – Rev M.2

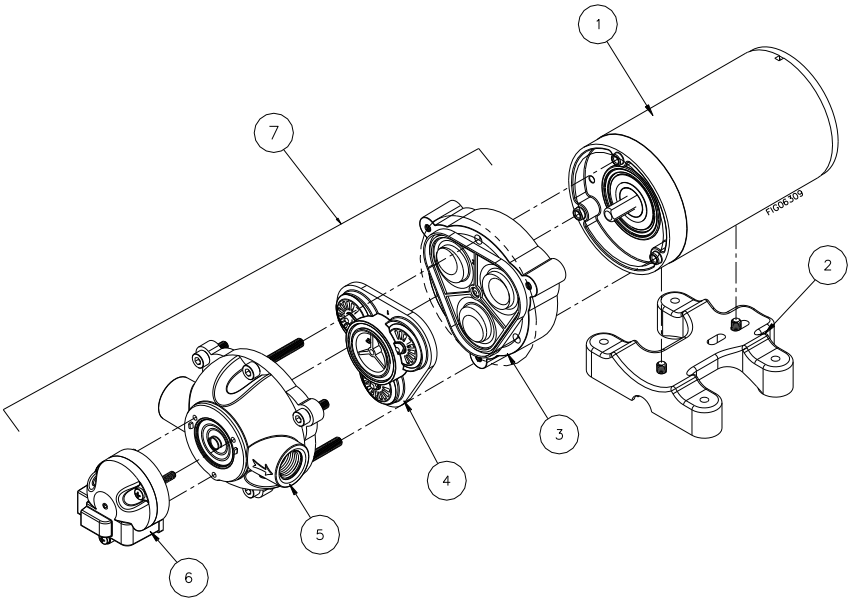

Ref#	Part#	Description	Qty
1	807120	Motor assembly	1
2	800428	Base plate assembly	1
3	807186	Diaphragm assembly	1
4	807189	Valve plate assembly	1
5	807193	Upper housing assembly	1
6	806905	Pressure switch assembly	1
7	A26815151	Complete pump head assembly	1
N/A	787381	Replacement fuse	1

Exploded View – 26815152 – Rev M.2

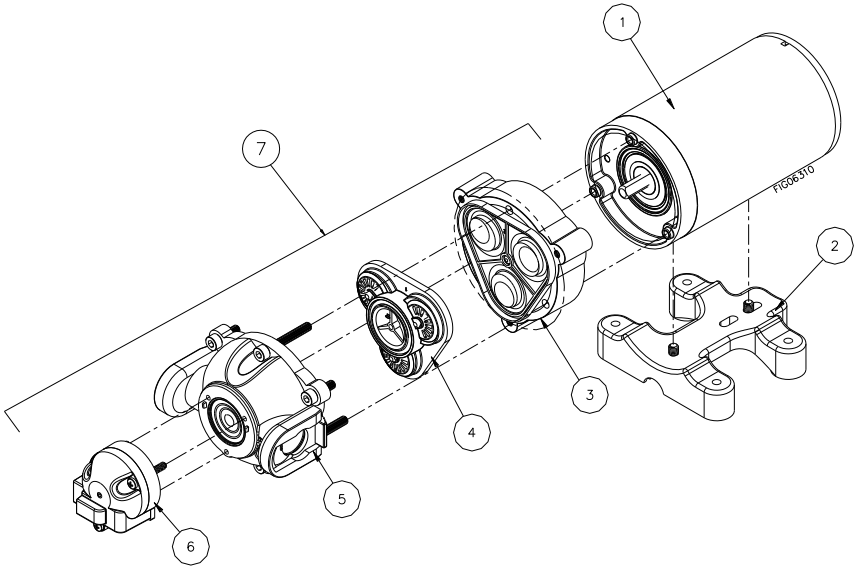

Ref#	Part#	Description	Qty
1	8007120	Motor assembly	1
2	800428	Base plate assembly	1
3	807186	Diaphragm assembly	1
4	807189	Valve plate assembly	1
5	807194	Upper housing assembly	1
6	806905	Pressure switch assembly	1
7	A26815152	Complete pump head assembly	1
N/A	787381	Replacement fuse	1

Limited Warranty

Dear Valued Customer:

The NorthStar Product you just purchased is built with the finest material and craftsmanship. Use this product properly and enjoy the benefits from its high performance. By purchasing a NorthStar product, you show a desire for quality and durability. Like all mechanical equipment this unit requires a due amount of care. Treat this unit like the high-quality piece of machinery it is. Neglect and improper handling may impair its performance. Please thoroughly read the instructions and understand the operation before using your product.

Limited Warranty

NorthStar shall warranty any piece of equipment manufactured, or parts of equipment manufactured, to be free from defects in material or workmanship for a period of 2 years for noncommercial/nonrental use and a period of 90 days for commercial/rental use from the date of purchase by user.

NorthStar shall warranty any wear item, including, but not limited to, valves, seals, pump diaphragms, hoses, and filter elements to be free from defects in material or workmanship for a period of 90 days from the date of purchase by user. This warranty applies to the original purchaser of the equipment and is non-transferable. Verification of purchase is the responsibility of the buyer. Parts will be replaced or repaired at no charge, except when the equipment has failed due to lack of proper maintenance. Any misuse, abuse, alteration or improper installation or operations will void warranty. Determining whether a part is to be replaced or repaired is the sole decision of NorthStar.

NOTE: Some services performed by parties other than NorthStar may void warranty.

This warranty covers parts only. It will not provide for replacement of complete products due to defective parts.
Components not manufactured by NorthStar are guaranteed by their manufacturer and can be serviced at factory-authorized locations near you. Any costs incurred due to replacement or repair of items outside of a NorthStar approved facility is the responsibility of the buyer and not covered under warranty. NorthStar can supply you with the service center location in your area.

This warranty specifically excludes the following; failure of parts due to damage caused by accident, fire, flood, windstorm, acts of God, applications not approved by NorthStar in writing, corrosion caused by chemicals, use of replacement parts which do not conform to manufacturer's specifications, and damage caused by vandalism. Additional exclusions: loss of running time, inconvenience, loss of income, or loss of use, including any implied warranty of merchantability of fitness for a specific use.

Warranty does not cover items subject to normal wear such as tires, receptacles or any part subject to direct physical contact by the public. This warranty does not cover any personal injury or damage to surrounding property caused by failure of any part.

This warranty is in lieu of any other warranty expressed or implied and NorthStar assumes no other responsibility or liability outside that expressed within this warranty.

Please fill in the following information and have it on hand when you call in on a warranty claim.

Customer Number: _____

Date of Purchase: _____

NorthStar Serial Number: _____

Item Number: _____

This page left intentionally blank.



Northern Tool + Equipment Co., Inc.
Burnsville, MN 55306
NorthernTool.com