NORTH STAR®
Proven Performance

M1654400G

Item Number: 1654400, 1654403, 1654404, 1654406

Serial Number: _____

Owner's Manual

Instructions for Installation/Set-up, Operation, Servicing, & Storage

Portable, Outdoor Use Only, Gasoline Generator

Can be used to power individual appliances plugged directly into the generator's outlets, or as a back-up connection to a building's power supply (via a professionally installed UL-approved transfer switch).

⚠WARNING

READ and UNDERSTAND this manual completely before using the generator! Failure to properly set up, operate, and maintain this generator could result in ***serious injury or death*** from ***carbon monoxide poisoning, electric shock, fire/explosion, or burns***. In particular, be aware of the following hazards:

CO Poisoning

Generators give off carbon monoxide, a poisonous gas that can kill you. You CANNOT smell it, see it, or taste it.

- ONLY run generator OUTDOORS and at least 20 feet from the home, away from windows, vents, and air intakes, to allow proper ventilation. If you start to feel sick, dizzy, or weak while using the generator, shut off the engine and get to fresh air RIGHT AWAY. NEVER run generator inside any enclosed or semi-enclosed spaces, including homes, basements, garages, sheds, boxes, RVs, boats, or pick-up truck beds. These spaces can trap poisonous gases, EVEN if you run a fan or open windows.
- Install carbon monoxide alarms inside nearby structures/buildings (battery-operated, or plug-in with battery backup).

Electric shock / Electrocution

- High voltage electricity from generator can kill. DO NOT operate in wet locations. Be sure generator is properly grounded. Use only UL-listed, outdoor-rated grounded extension cords of proper size.
- NEVER plug the generator directly into a wall outlet. ANY connection to a building's electrical system MUST ISOLATE THE GENERATOR FROM UTILITY POWER via a UL-approved transfer switch installed by a licensed electrician. Otherwise, back feed from the generator into the power grid could kill utility workers.

Fire / Explosion

- DO NOT overload generator (per rated capacity) and OPERATE ONLY in an area with adequate cooling ventilation so engine does not overheat. Exhaust can be extremely hot. Keep muffler at least 7 feet from all combustible objects.
- All fuels are flammable. Never fuel a running or hot engine. Never pump fuel directly into generator at gas station – use approved container to transfer fuel. Ensure there are no fuel leaks and keep sources of sparks and flames away.
- ALWAYS keep a fire extinguisher rated "ABC" nearby.

STOP!

CHOOSE THE RIGHT GENERATOR FOR YOUR NEEDS. See the "Power load Planning & Management" section of this manual to determine your power load requirements and then compare to the generator's rated capacity.

INSPECT COMPONENTS: Closely inspect to make sure no components are missing or damaged. See the "Unpacking & Delivery Inspection" section for instructions on whom to contact to report missing or damaged parts.

ARRANGE FOR PROFESSIONAL INSTALLATION of a transfer switch if you will be connecting the generator to your building's electrical system. See the "Installation/Initial Set-Up" section for more information about this requirement.

Any Questions, Comments, Problems, or Parts Orders

Call NorthStar Product Support 1-800-270-0810

Hazard Signal Word Definitions

	This is the safety alert symbol. It is used to alert you to potential personal injury hazards. Obey all safety messages that follow this symbol to avoid possible injury or death.
⚠DANGER	DANGER (red) indicates an imminently hazardous situation which, if not avoided, will result in death or serious injury.
⚠WARNING	WARNING (orange) indicates a potentially hazardous situation which, if not avoided, could result in death or serious injury.
⚠CAUTION	CAUTION (yellow) indicates a potentially hazardous situation which, if not avoided, may result in minor or moderate injury.
CAUTION	CAUTION (yellow) used without the safety alert symbol indicates a potentially hazardous situation which, if not avoided, may result in property damage. fig01453

Table of Contents

Hazard Signal Word Definitions 2

About Your Generator 4

Specifications 6

Safety Label Locations 7

Machine Component Identification 8

Power Load Planning & Management 12

Installation / Initial Set-Up:
1. Unpacking & Delivery Inspection 15
2. Planning the Power Load 21
3. Set-up either as a BUILDING BACK-UP or PORTABLE Power Source 21
4. Selecting a Suitable Site 25
5. Grounding the Generator 27
6. Battery Installation 28

Operation:
1. General Safety Rules for Operation 29
2. Preparing for Operation 33
3. Starting the Engine 36
4. Checking Generator Output 37
5. Connecting Loads 38
6. Stopping the Engine 38
7. Storage & Exercise 39
8. Display… 41
9. Carbon Monoxide System 44
10. Battery Charger 44

Maintenance & Repair 45

Troubleshooting 50

Summary of Important Safety Information for Operation 52

Generator Exploded View 56

Control Panel Parts List 64

Wiring Schematic 67

Generator Head Exploded View 71

Limited Warranty 78

Thank you for purchasing your NorthStar portable generator!

About Your Generator

This engine-driven, portable generator is designed to provide up to its rated amount of electrical power. (See specifications section of this manual for model specific ratings)
It can supply power:

1. As a portable power source. You can plug appliances directly into the generator's electrical outlets.
2. As a back-up, standby power source for a building. A licensed electrician can connect the generator to your building's electrical system via the installation of an **UL-approved transfer switch.** (See the "Installation & Initial Set-up" section of this manual to learn more about specific requirements and precautions relating to wiring the generator to your building's electrical system.)

You must select a generator adequately sized for your power needs. You need to determine the power needs of all the appliances/tools you wish to power at the same time and choose a generator rated to provide at least that power level. See the "Power Load Planning & Management" section of this manual to determine your specific power load requirements and then compare them to this generator's rated capacity. You must not overload the generator. Overloading will cause damage to the generator and attached electrical devices and may also result in fire.

Be sure to read about site selection and grounding requirements for running this generator. More detailed information can be found in the "Installation & Initial Set-up, Steps 5 & 6 of this manual.

This generator is too heavy for one person to lift without mechanical assistance. An optional lifting kit is available from NorthStar and is recommended if you will be moving the generator unassisted. Other optional accessories available from NorthStar include a cover for storage, UL-approved transfer switches, and extension cords.

Contact NorthStar Product Support at 1-800-270-0810 with questions about optional accessories or to order.

Read this Manual

⚠WARNING

Improper use or maintenance of this generator can result in ***serious injury or death*** from ***carbon monoxide poisoning, electric shock/electrocution, fire/explosion, or burns***.

Read this manual completely before using the generator and follow all instructions and safety rules.

You must follow all instructions and safety precautions presented throughout this manual. A summary of important safety information can be found at the end of the manual. Keep this manual for reference and review.

Proper preparation, operation, and maintenance will result in operator safety, as well as best performance and long life of the generator. For detailed engine operation and maintenance information, always refer to the engine Owner's Manual furnished with the generator.

NorthStar is constantly improving its products. The specifications outlined herein are subject to change without prior notice or obligation. The purchaser and/or user shall assume liability for any modification and/or alterations of this equipment from original design and manufacture.

About Your Generator

Before using, the user shall determine the suitability of this product for its intended use and assumes liability therein.

Contact NorthStar Product Support at 1-800-270-0810 for any questions about the appropriate use of this generator.

Warranty Registration

Please fill in the warranty registration information in the back of this manual and have it on hand when you call in on a warranty claim or replacement parts.

ATTENTION:
All Rental Companies and Private Owners who loan this equipment to others!

All persons to whom you rent/loan this generator must have access to and read this manual. Keep this owner's manual with the generator at all times and advise all persons who will operate the machine to read it. You must also provide personal instruction on how to safely operate the generator and remain available to answer any questions a renter/borrower might have.

Specifications

Item Number	#1654400	#1654403
Maximum Output	5500 Watts (W)	8000 Watts (W)
Continuous Output	4500 Watts (W)	6600 Watts (W)
Voltage	120 / 240 Volt (V)	120 / 240 Volt (V)
Phase	Single phase (4-wire)	Single phase (4-wire)
Frequency	56.5-63.3 Hertz (Hz)	56.5-63.3 Hertz (Hz)
Power Factor	1.0 p.f.	1.0 p.f.
Engine	Honda GX270	Honda GX390
Engine Speed	3390 - 3798 RPM	3390 - 3798 RPM
Fuel Type	Non-leaded automobile gasoline	Non-leaded automobile gasoline
Fuel Capacity	8 gallons	8 gallons
Oil Capacity	1.16 US quarts	1.16 US quarts
Starting Method	Recoil	Electric
Battery	Not Applicable	12VDC. 18AH
Battery Dimensions		(L x W x H) 7.2” x 3.1” x 6.6”
Spark Arrestor	Installed	Installed
Dimensions		
Length	41”	41”
Width	32”	32”
Height	29”	29”
Dry Weight	227 lbs.	280 lbs.

Item Number	**#1654404**	**#1654406**
Maximum Output	13000 Watts (W)	15000 Watts (W)
Continuous Output	10500 Watts (W)	13500 Watts (W)
Voltage	120 / 240 Volt (V)	120 / 240 Volt (V)
Phase	Single phase (4-wire)	Single phase (4-wire)
Frequency	56.5-63.3 Hertz (Hz)	56.5-63.3 Hertz (Hz)
Power Factor	1.0 p.f.	1.0 p.f.
Engine	Honda GX630	Honda GX690
Engine Speed	3390 - 3798 RPM	3390 - 3798 RPM
Fuel Type	Non-leaded automobile gasoline	Non-leaded automobile gasoline
Fuel Capacity	12 gallons	12 gallons
Oil Capacity	2.1 US quarts	2.1 US quarts
Starting Method	Electric	Electric
Battery	12VDC. 35AH	12VDC. 35AH
Battery Dimensions	(L x W x H) 7.8” x 5.3” x 6.3”	(L x W x H) 7.8” x 5.3” x 6.3”
Spark Arrestor	Installed	Installed
Dimensions		
Length	43”	43”
Width	36”	36”
Height	35”	35”
Dry Weight	387 lbs.	390 lbs.

Safety Label Locations

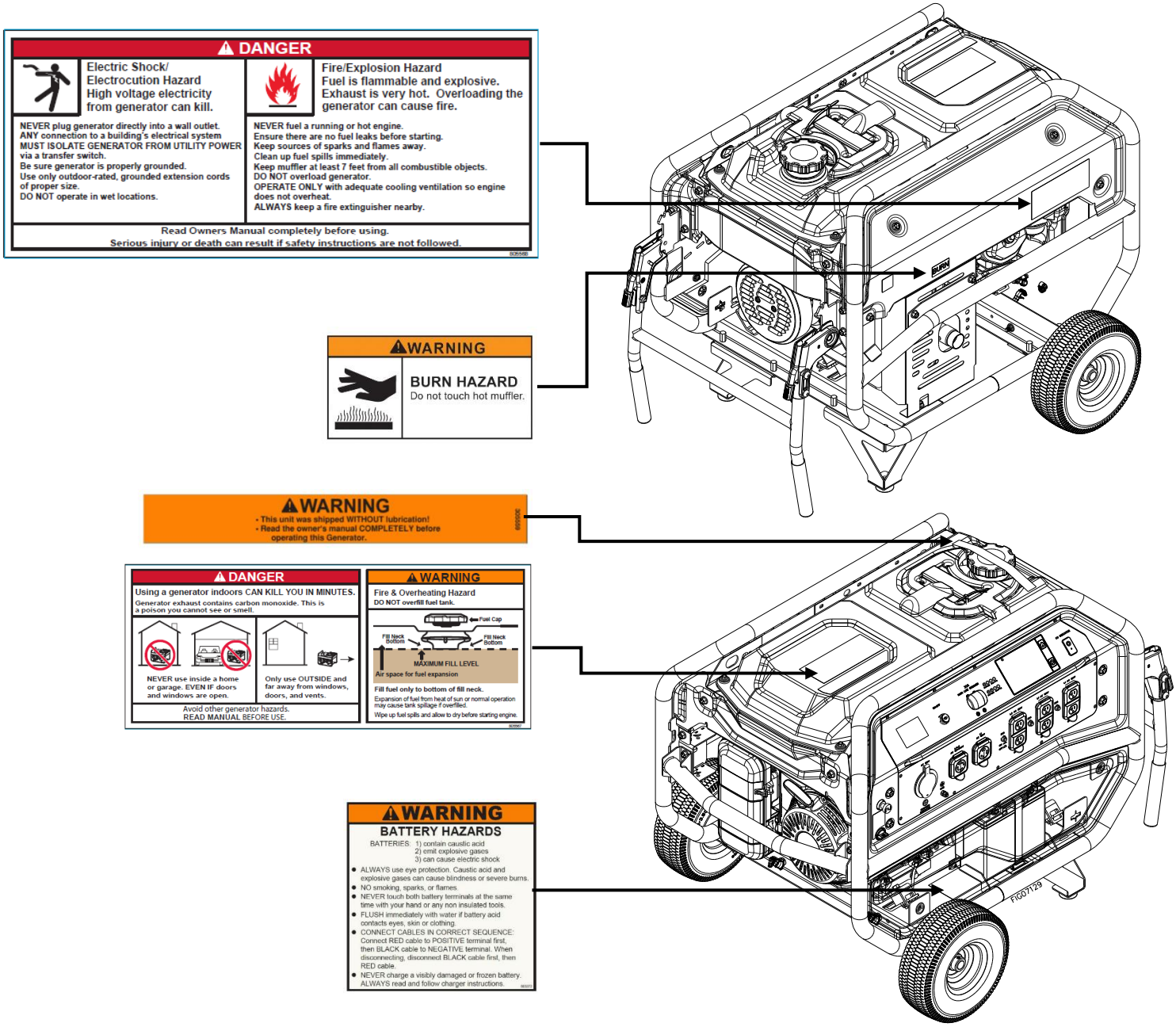

*1654403 Shown
Lower panel removed to show decal position

Part #	Description	Qty
805568	Shock & Fire Hazard	1
786635	Burn Hazard	1
305559	No Oil Warning	1
805567	Danger Warning	1
805372	Battery Hazard	1

Always make sure safety labels are in place and in good condition. If a safety label is missing or not legible, order new labels or unsafe operation could result.

To order replacement safety labels, call NorthStar Product Support at **1-800-270-0810.**

Machine Component Identification
Items: 1654400, 1654403

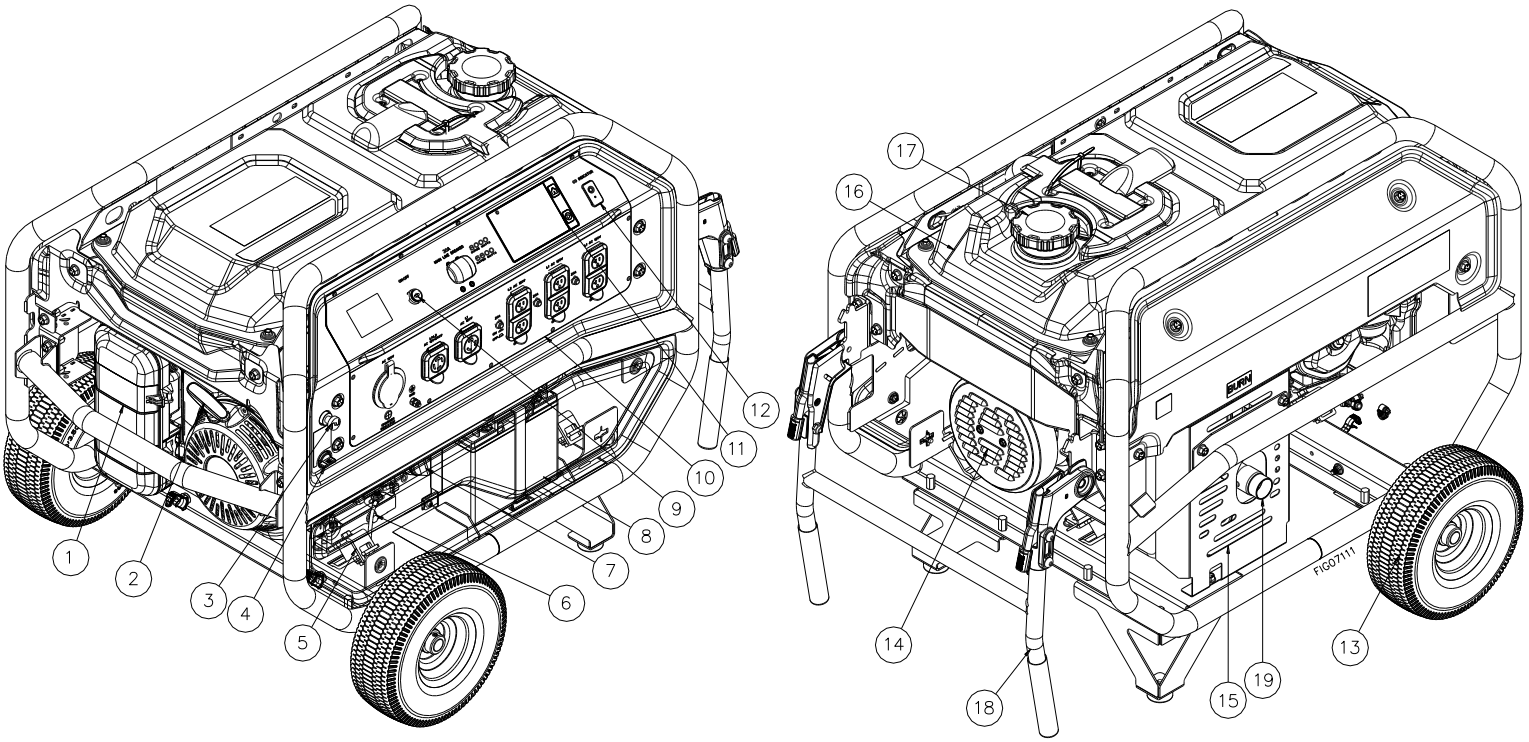

#1654403 Shown.
Lower panel is removed to show internal components.

Ref.	Description	Ref.	Description
1	Air Cleaner	11	Display
2	Recoil	12	Carbon Monoxide Indicator
3	Choke Cable Lever	13	Wheels
4	Fuel Valve	14	Generator Head
5	Vibration Isolation Mount	15	Muffler
6	Oil Drain Plug	16	8 Gallon Gas Tank
7	Oil Fill Port	17	Gasoline Tank Cap
8	Battery (1654403 Only)	18	Handle
9	Engine Key Switch	19	Spark Arrestor
10	Control Panel		

Machine Component Identification
Items: 1654400, 1654403

REFERENCE GUIDE	
Reference 1 – Air Cleaner	Refer to your Honda engine manual for air cleaner care.
Reference 2 – Recoil	Grasp firmly when starting engine.
Reference 3 – Choke Cable Lever	Used during cold starts. Refer to the Honda engine manual for usage.
Reference 4 – Fuel Valve	The Honda engine has an ON-OFF valve. Always keep this valve closed when the generator is not in use. Always keep this valve closed while transporting the generator.
Reference 5 – Vibration Isolation Mount	The engine and generator are mounted on rubber cylinders that absorb most of the engine vibration. This feature eliminates the tendency of the machine to "walk" which is common in engine-powered equipment.
Reference 6 – Oil Drain Plug	Refer to your Honda engine manual for oil change recommendations.
Reference 7 – Oil Fill Port	Refer to your Honda engine manual for oil change recommendations.
Reference 8 – Battery (1654403 Only)	Type required: 12VDC. 18AH
Reference 9– Engine Key Switch	The engine key switch is located on the control panel. Always locate this switch and be familiar with its location before operating the generator.
Reference 10 – Control Panel	An electrical device that contains outlets and meters for controlling other electrical devices
Reference 11 – Display	LCD screen that contains operating parameters, service intervals, and alerts.
Reference 12 – Carbon Monoxide (CO) Indicator	If the generator is operated in an enclosed space or without adequate fresh air, the CO detector will activate and shut the generator off. The CO indicator light will flash to alert/notify the operator.
Reference 13 – Wheels	10-in flat-free wheels roll easily over most terrain.
Reference 14 – Generator Head	The electricity producing part of the generator.
Reference 15 – Muffler	An acoustic device installed onto the exhaust system that is designed to reduce noise.
Reference 16 – 8 Gallon Gas Tank	Large tank allows for extended run capabilities. Always allow room for gasoline expansion by not filling the gas tank completely full.
Reference 17 – Gasoline Tank Cap	The gasoline tank cap is extra-large, creating a large hole for refilling and a comfortable grip.
Reference 18 – Handle	Folding handle used to move generator.
Reference 19 – Spark Arrestor	Mesh screen prevents muffler from emitting sparks.

Machine Component Identification
Items: 1654404, 1654406

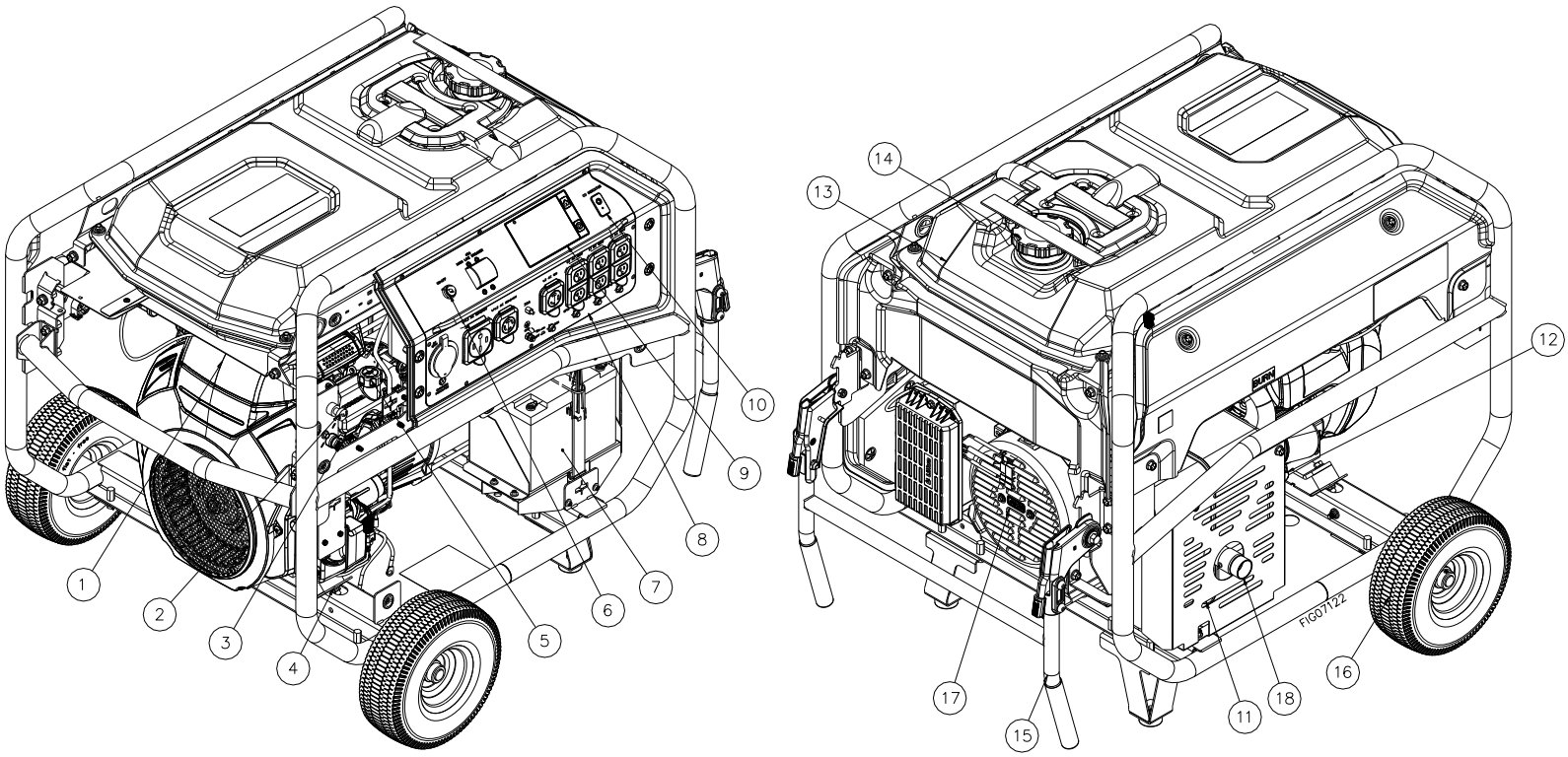

#1654404 Shown.
Side Panels are removed to show internal components.

Ref.	Description	Ref.	Description
1	Air Cleaner	10	Carbon Monoxide Indicator
2	Choke Cable Lever	11	Muffler
3	Fuel Valve	12	Oil Drain Plug
4	Vibration Isolation Mount	13	12 Gallon Gas Tank
5	Oil Fill Port	14	Gasoline Tank Cap
6	Engine Key Switch	15	Handle
7	Battery	16	Wheels
8	Control Panel	17	Generator Head
9	Display	18	Spark Arrestor

Machine Component Identification
Items: 1654404, 1654406

REFERENCE GUIDE	
Reference 1 – Air Cleaner	Refer to your Honda engine manual for air cleaner care.
Reference 2 – Choke Cable Lever	Used during cold starts. Refer to the Honda engine manual for usage.
Reference 3 – Fuel Valve Lever	The Honda engine has an ON-OFF valve. Always keep this valve closed when the generator is not in use. Always keep this valve closed while transporting the generator.
Reference 4 – Vibration Isolation Mount	The engine and generator are mounted on rubber cylinders that absorb most of the engine vibration. This feature eliminates the tendency of the machine to "walk" which is common in engine-powered equipment.
Reference 5 – Oil Fill Port	Refer to your Honda engine manual for oil change recommendations.
Reference 6 – Engine Key Switch	The engine key switch is located on the engine. Always locate this switch and be familiar with its location before operating the generator.
Reference 7 – Battery	Type required: 12VDC. 35AH
Reference 8 – Control Panel	An electrical device that contains outlets and meters for controlling other electrical devices
Reference 9 – Display	LCD screen that contains operating parameters, service intervals, and alerts.
Reference 10 – Carbon Monoxide (CO) Indicator	If the generator is operated in an enclosed space or without adequate fresh air, the CO detector will activate and shut the generator off. The CO indicator light will flash to alert/notify the operator.
Reference 11 – Muffler	An acoustic device installed onto the exhaust system that is designed to reduce noise.
Reference 12 – Oil Drain Plug	Refer to your Honda engine manual for oil change recommendations.
Reference 13 – 12 Gallon Gas Tank	Large tank allows for extended run capabilities. **Always** allow room for gasoline expansion by not filling the gas tank completely full.
Reference 14 – Gasoline Tank Cap	The gasoline tank cap is extra-large, creating a large hole for refilling and a comfortable grip.
Reference 15 – Handle	Folding handle used to move generator.
Reference 16 – Wheels	10-in flat-free wheels roll easily over most terrain.
Reference 17 – Generator Head	The electricity producing part of the generator.
Reference 18 – Spark Arrestor	Mesh screen prevents muffler from emitting sparks.

Power Load Planning & Management

⚠ WARNING

NEVER exceed the rated wattage capacity of your generator.

OVERLOADING may cause SERIOUS DAMAGE to the generator and attached electrical devices and may result in fire.

Your generator MUST BE SIZED PROPERLY to provide both the running and starting (surge) wattage of the devices you will be powering. Before using your generator, determine the running and starting wattage requirements of all the electrical devices you will be powering simultaneously. The sum of the running and starting wattages of the devices being powered must not exceed the continuous output rating of your generator. (The continuous output rating of your generator is listed in the "Specifications" section of this manual.) Note that:

- Devices without electric motors such as light bulbs, radios, and televisions have the same running and starting wattage.
- Devices with electric motors such as refrigerators, compressors, and hand tools typically require a starting wattage that is 3 to 5 times greater than the running wattage.

The running and starting wattage requirements are often listed on a device's nameplate. If wattage is not given on the device's nameplate, the wattage may be calculated by multiplying the nameplate voltage by nameplate amperage, Watts = Volts X Amps.

Example conversion to watts:

120 Volts X 5 Amps = 600 Watts

If only the running voltage is given on the nameplate for a device with an electric motor, the starting wattage can be approximated to be three to five times the running wattage.

Estimates for the running wattage requirements for common devices are listed in **Table 1** below. Guidance for starting wattages is provided in the table's footnotes.

Table 1

Device	Running Watts (Continuous)	Starting Watts (Surge)
10in. Table Saw	1800	4500
7-1/4in. Circular Saw	1400	2300
8in. Bench Grinder	1400	2500
Air Conditioner - Central (24,000 BTU)	3800	4950
Air Conditioner - RV (13,500 BTU)	1500	3000
Air Conditioner - Window (10,000 BTU)	1200	2200
Battery Charger: 100 Amp with 300 Amp Boost	2400	7800
Battery Charger: 15 Amp	380	-
Battery Charger: 60 Amp with 250 Amp Boost	1500	5750
Belt Sander	1200	2400
Ceiling Fan	800	1200
Clock Radio	100	-
Clothes Dryer (electric)	1800	5750

Power Load Planning & Management (cont'd)

Device	Running Watts (Continuous)	Starting Watts (Surge)
Clothes Dryer (gas)	700	1200
Clothes Washer	1150	2300
Coffee Maker	1750	-
Deep Freezer	700	1000
Desktop Computer w/ 17" monitor	800	-
Dishwasher (Hot Dry)	1500	1500
Drill: 1/2in., 5.4 Amps	600	900
Drill: 3/8in., 4 Amps	440	600
DVD/CD Player	100	-
Electric Fence: 25 Miles	2500	-
Electric Fry Pan	1300	-
Electric Range: 8in. Element	2100	-
Furnace Fan (Gas or fuel oil): 1/2 HP	875	2350
Furnace Fan (Gas or fuel oil): 1/4 HP	600	1000
Furnace Fan (Gas or fuel oil): 1/8 HP	300	500
Garage Door Opener	750	1200
Hair Dryer	1250	-
Hot Plate	2100	-
Inkjet Printer	80	-
Iron	1200	-
Laser Printer	950	-
Lights (Ten 75 Watt light bulbs)	750	-
Microwave Oven 1000W	1000	-
Milk Cooler	1100	1800
Milker (Vacuum Pump): 2 HP	1000	2300
Miter Saw - 10"	1650	2400
Oscillating Fan	200	400
Portable Heater (Kerosene, Diesel: 150,000 BTU	625	1000
Pressure Washer: 1 HP	1200	3600
Quartz Halogen Work light	1000	-
Reciprocating Saw	1200	2000
Refrigerator Freezer	700	1500
Security System	500	-
Space Heater	1800	-
Stereo Receiver	450	-
Sump Pump: 1/2 HP	1050	2150
Sump Pump: 1/3 HP	800	1300
Television 27"	500	-
VCR	100	-
Water Heater (Electric 40gal)	4000	-
Water Well Pump (1/3hp 220v)	1000	2000

(a) Hard-starting motors require 3-5 times the rated running watts

(b) For extremely hard to start loads such as air conditioners and air compressors, consult the equipment dealer to determine maximum wattage

Power Load Planning & Management (cont'd)

To calculate the running and starting wattage requirements for the devices you will be powering, follow these steps:

1. Make a list of all electrical devices you will be powering at the same time with the generator.
2. List the greater of the running or starting wattage next to each device as obtained from the devices' nameplate or **Table 1**. If only the running wattage for a device with an electric motor is known, the starting wattage can be estimated to be at least 3 times the running wattage.
3. Add the wattages for all devices on your list. This total must be lower than the continuous output rating of your generator.

Example:

Device to be Powered	**Greater of Starting/Running Wattage**
Light Bulbs (10 – 75 watt)	750 W
Refrigerator Freezer	1500 W
Microwave Oven 1000W	1000 W
Air Conditioner, Window (10,000 BTU)	2200 W
Sump pump (1/3 hp)	1300 W
Total	**6750W**

In this example, the generator must have a continuous output of at least 6750 watts in order to power all of the devices simultaneously.

STAGGERING LOADS

You can increase the number of devices your generator can power by staggering the load on the generator. For example, you could alternately power your refrigerator and air conditioner for limited periods of time -- powering only one of the devices at a time and never powering both at the same time.

Installation / Initial Set-Up

There are a few important steps required to set up your generator for initial use. These steps are:

Steps for Installation / Initial Set-Up

1. **Unpacking & delivery inspection.**
2. **Planning the power load to stay within the generator's rated capacity.**
3. **Setting up generator for the type of power generation you need:**
    a. **portable power source, or**
    b. **connected to a building as a back-up power source.**
4. **Selecting a site for using the generator.**
5. **Grounding.**
6. **Battery installation (electric start models only).**

Each of these steps is discussed in detail below:

1. Unpacking & Delivery Inspection

You should inspect the generator immediately after you receive delivery.

See the "Machine Component Identification" section of this manual for a diagram of the generator and its components.

- If you have missing or damaged components, contact Product Support at 1-800-270-0810.

Installation / Initial Set-Up

Closely inspect all contents in the shipping carton.

Note that some parts are shipped inside the Hardware bag.

• If you have missing or damaged components, please contact NorthStar Product Support at 1-800-270-0810.

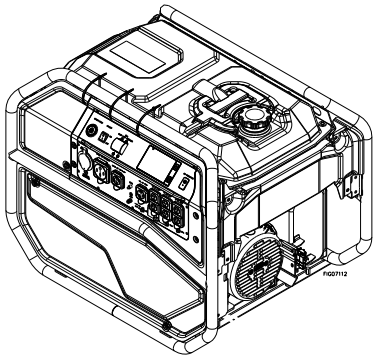

Generator

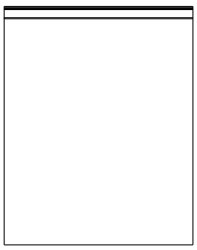

Hardware Bag

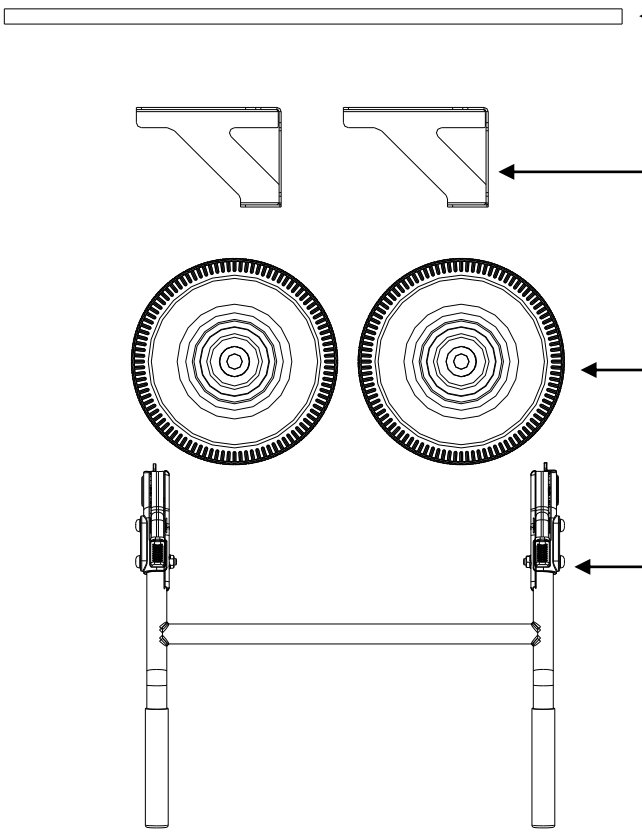

Axle
(Qty 1)
785398 – Used On 1654400 & 1654403
804160 – Used On 1654404 & 1654406

Foot Bracket
(Qty 2)
806351 – Used On 1654400, 1654403, 1654404 & 1654406

Wheel
(Qty 2)
804852

Handle
(Qty 1)
804192 – Used On 1654400 & 1654403
804161 – Used On 1654404 & 1654406

Installation / Initial Set-Up

Unpacking the Hardware Bag:

Note: Items in this section are found in the Hardware bag.

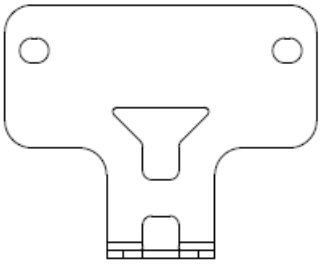

Axle Bracket
(Qty 2)
804158

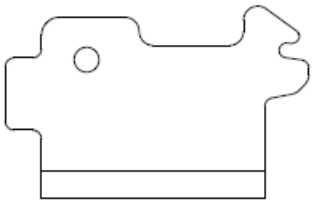

Handle Mount Bracket Right
(Qty 1)
804209

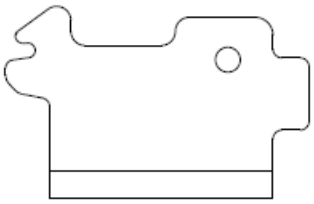

Handle Mount Bracket Left
(Qty 1)
804263

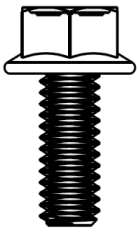

1/4-20 X 3/4" Bolt
(Qty 2)
82009

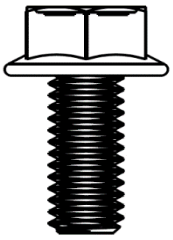

5/16-18 X 3/4" Bolt
(Qty 14)
82621

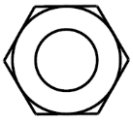

1/4-20" Nylon Nut
(Qty 2)
82222



5/16-18" Nylon Nut
(Qty 4)
82630

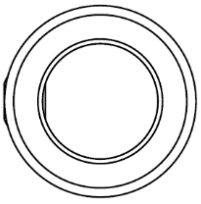

Wheel Retainer
(Qty 2)
305200

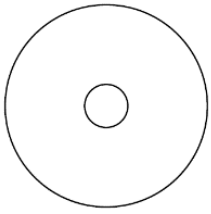

Bumper
(Qty 2)
2215

Handle Assembly Fasteners

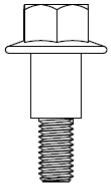

M8-1.25 X 15mm Bolt
(Qty 2)
805099



Flat Washer 12mm
(Qty 2)
805194

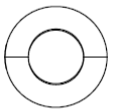

Wave Washer 12mm
(Qty 2)
805195



M8-1.25 Nylon Lock Nut
(Qty 2)
777495

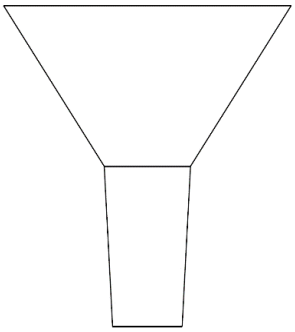

Funnel
(Qty 1)
785290

Battery Terminal
Fasteners

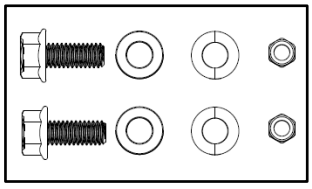

Installation / Initial Set-Up

Step 1 – Wheels Assembly

- Secure the generator on blocks at least 7” tall. Make sure the holes for the axle are not obstructed.
- Insert bolts through each axle bracket and loosely install to the bottom of the generator as shown.
- Slide axle through the axle brackets and center it on the generator. Tighten the bolts.
- Insert wheels onto the axle.
- Slide wheel retainers onto the axle and tighten the set screws.

Tools Needed

- 1/2” wrench
- 5/32” hex wrench

Fasteners Needed from Hardware Bag:

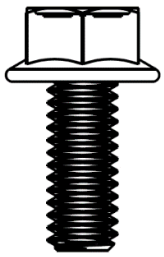

5/16-18 X 3/4” Bolt
(Qty 4)
82621

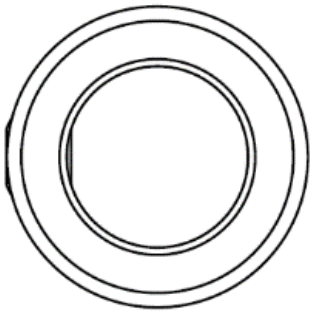

Wheel Retainer
(Qty 2)
305200

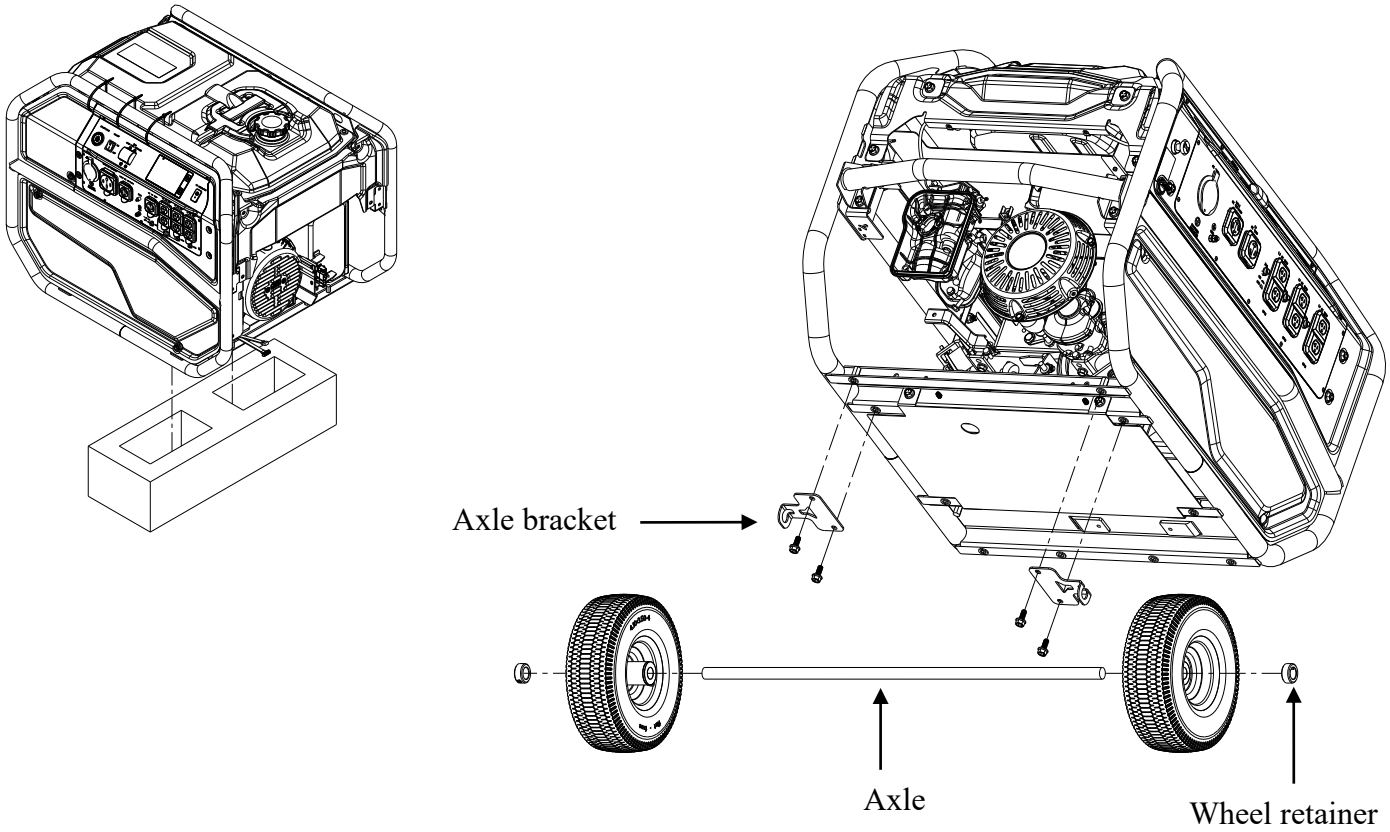

Installation / Initial Set-Up

Step 2 – Foot Bracket Assembly

- First install rubber bumpers to foot brackets using 1/4” bolts and nuts as shown.
- Attach assembled foot brackets to generator by using 5/16” bolts in respective locations as shown.

Tools Needed

- 1/2” wrench
- 7/16” wrench
- 3/8” wrench

Fasteners Needed from Hardware Bag:

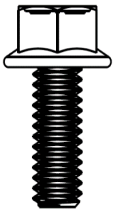

5/16-18 X 3/4” Bolt (Qty 6)

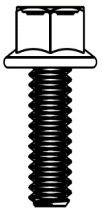

1/4-20 X 3/4” Bolt (Qty 2) 82009

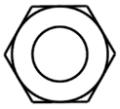

1/4-20” Nylon Nut (Qty 2) 82222

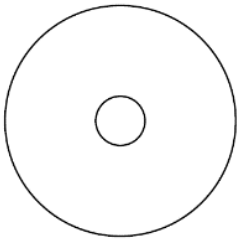

Bumper (Qty 2) 2215

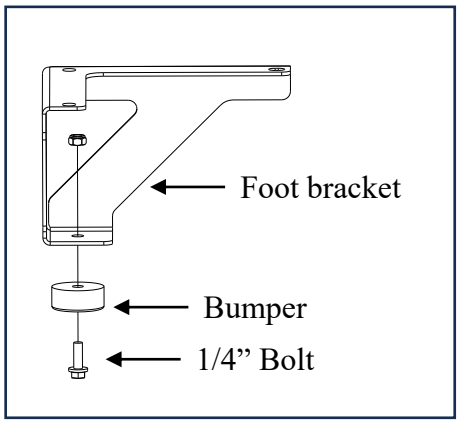

Foot bracket assembly (Qty 2)

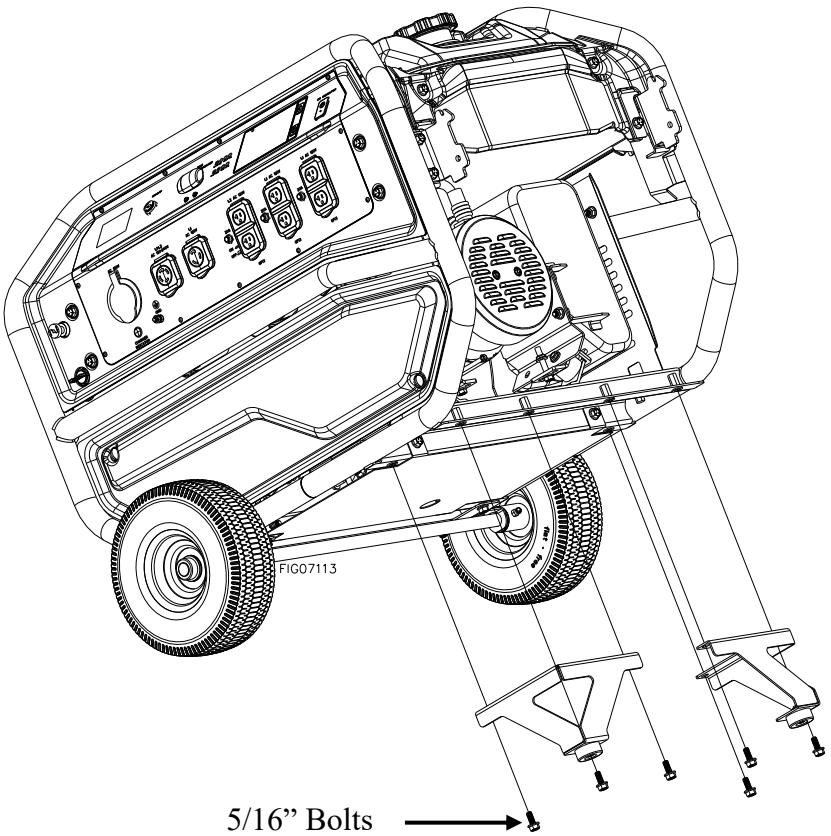

Installation / Initial Set-Up

Step 3 – Handle Assembly

- Attach handle brackets onto the handle using M8 bolts, washers and nuts as shown. Note installation sequence of washers. Tighten between 17-21 ft-lbs.
- Attach handle assembly onto the generator by using 5/16” bolts and nuts in respective locations as shown.

Tools Needed

- 2x 1/2” wrench
- Torque wrench

Fasteners Needed from Hardware Bag:

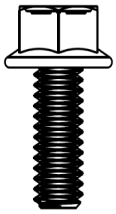

5/16-18 X 3/4” Bolt (Qty 4)



5/16-18” Nylon Nut (Qty 4) 82630

Handle Assembly Fasteners

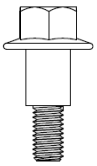

M8-1.25 X 15mm Bolt (Qty 2) 805099



Flat Washer 12mm (Qty 2) 805194



Wave Washer 12mm (Qty 2) 805195



M8-1.25 Nylon Lock Nut (Qty 2)

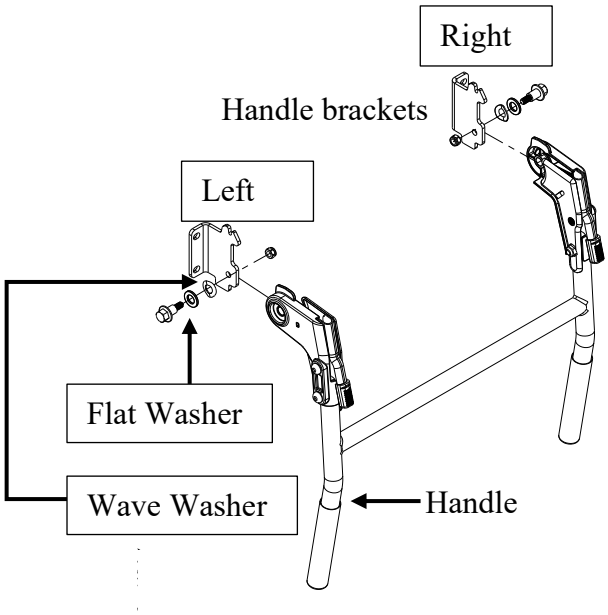

Handle Assembly

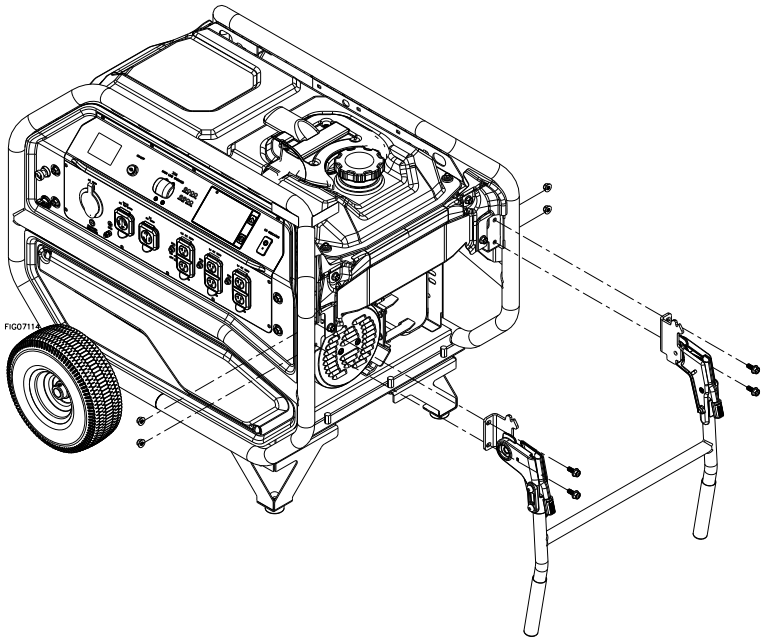

2. Planning the Power Load

Plan your power load so that you do not exceed the generator's rated capacity.

See the "Power Load Planning & Management" section of this manual to review how to plan and manage power loads for the generator.

3. Set-up either as a BUILDING BACK-UP or PORTABLE Power Source

This generator is designed to provide up to its rated amount of electrical power. It can supply electricity in two ways:

1. **As a back-up, standby power source for a building.** For this application, you must arrange for a licensed electrician to connect the generator to your building's electrical system via the installation of an UL-approved transfer switch. The transfer switch must be installed in accordance with building electrical code and guidelines supplied by your power company.
2. **As a portable power source**. You can plug appliances or tools directly into the generator's electrical outlets.

Specific requirements for each are given below.

Note: Regardless of whether you use your generator as a back-up power source connected to a building or as a portable power source, you must not overload the generator. Overloading may cause serious damage to the generator and attached electrical devices.

Using as a Back-up Power Source for a Building

Contact a licensed electrician to install an UL-approved transfer switch if you want to use your generator as a back-up power source for a building.

What does a transfer switch do? It:

a) Safely connects the generator to your building's electrical system by isolating your generator from your utility company's power lines, AND

b) Connects your generator to a critical subset of your building's circuits that are needed for emergency power needs.

If your generator will be connected to your building's electrical system, it MUST ALWAYS be isolated from the utility power grid with a *UL-approved transfer switch installed by a licensed electrician* in compliance with all applicable building and electrical codes, and in accordance with guidelines supplied by your power company.

⚠ DANGER:

A transfer switch must be installed to isolate your generator from the utility power grid. If your generator is NOT properly isolated from the utility system, serious hazards will arise:

- When your generator is running, it's output will back feed into the utility power line and transformer that are normally used to provide you with power. The transformer will step up the current to the normal line voltage. An unsuspecting utility line worker working on what he thinks is a deactivated line could be electrocuted.

- If your generator is connected (running or not) when utility power is restored, your generator will be destroyed. It could also explode or cause fire.

In addition to isolating your generator from the utility system, the transfer switch connects your generator to a limited set of circuits in your building that have been chosen as critical to operate during a power outage.

The generator may not power your entire home -- you must work with the installing electrician to determine which devices/appliances you wish to power during an outage. The electrician can help you determine which circuits and devices can be powered simultaneously without overloading the generator.

(See the previous section of this manual entitled "**Power Load Planning & Management"** for more information on load application and selection.)

Using as a Portable Power Source

When using the generator as a portable power source, you can plug electric devices and appliances directly into the generator's electrical outlets.

There are different kinds of electrical outlets on your generator:

1. 120/240 Volt, 30 Amp locking receptacle (NEMA L14-30R locking receptacle compatible with L14-30P mating plug).
2. 120 Volt, 20 Amp duplex straight-blade receptacles (NEMA 5-20R duplex receptacle compatible with NEMA 5-20P or 5-15P mating plugs).
3. 120-125 Volt, 15 Amp flanged charger inlet to charge the battery (NEMA 5-15P flanged power inlet compatible with NEMA 5-15P mating plug).)
4. 120 Volt, 30 Amp locking receptacle (NEMA L5-30R receptacle compatible with NEMA L5-30P mating plug)
5. 120/240 Volt, 50 Amp straight-blade receptacle (NEMA 14-50R receptacle compatible with NEMA 14-50P mating plug)
6. 120/240 Volt, 60 Amp straight-blade receptacle (NEMA 14-60R receptacle compatible with NEMA 14-60P mating plug)

#1654400
c5500

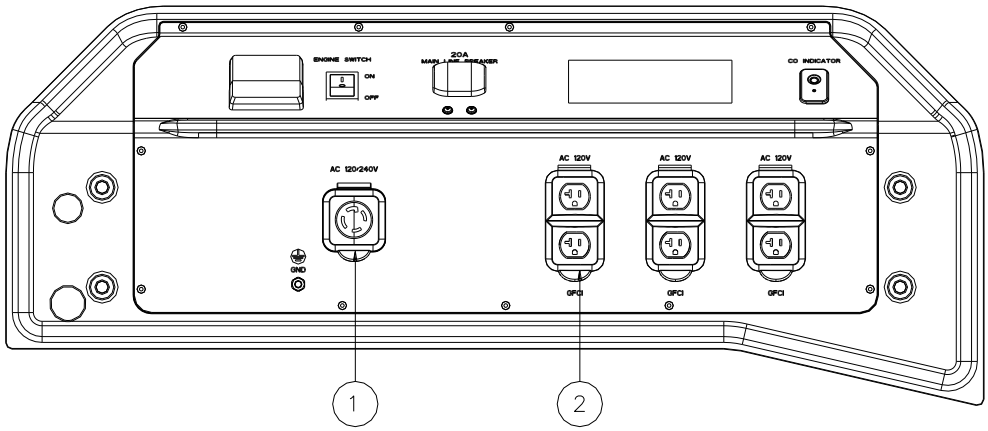

Installation / Initial Set-Up

#1654403
c8000s

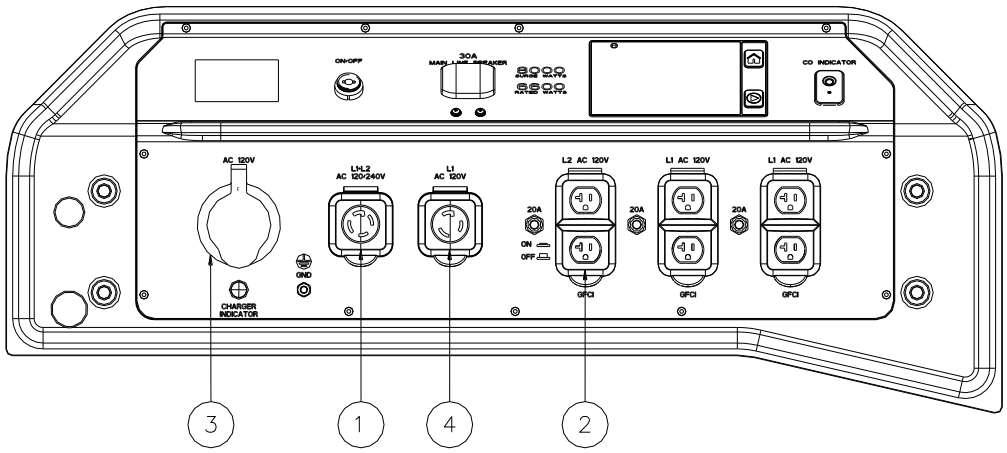

#1654404
c13000s

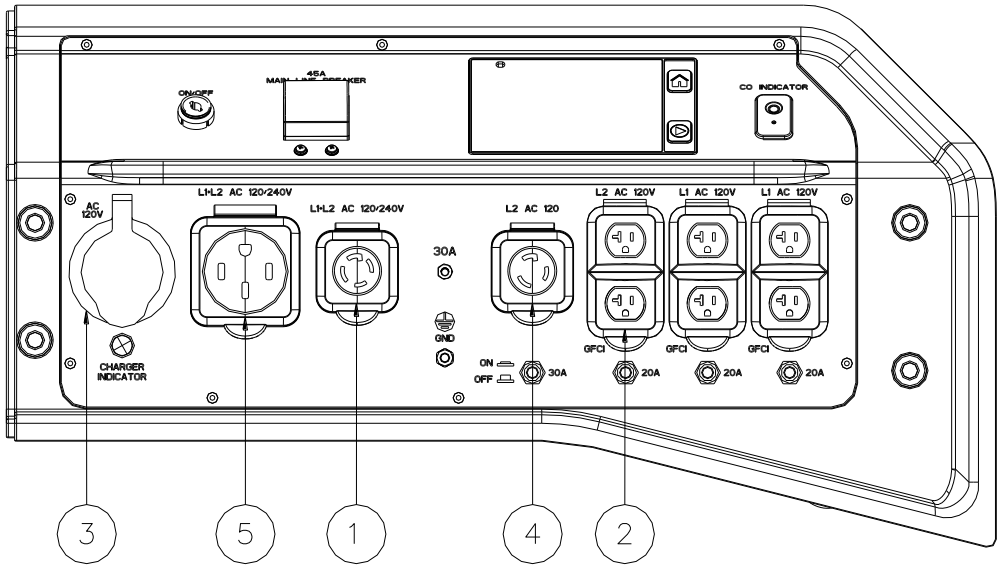

#1654406
c15000s

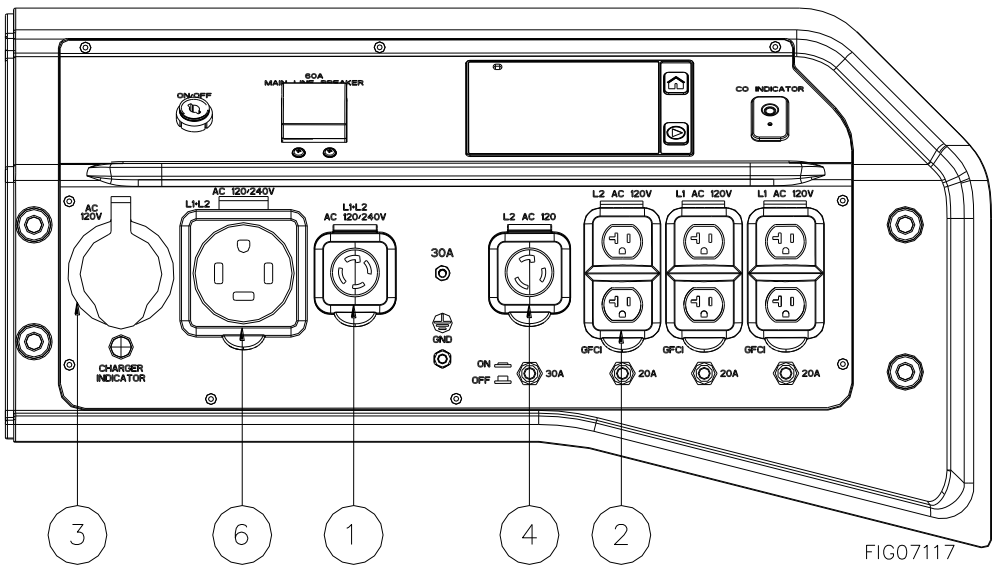

1. Make sure you plug each electrical device/appliance into the correct generator outlet based on the device's plug configuration and voltage/amperage rating. Never exceed the amperage rating of an outlet.
2. Extension cords may be used to power devices that are located at a distance from the generator. However, use only UL-listed, outdoor-rated, grounded extension cords of the proper size. Use Table 2 below to choose an adequately sized extension cord according to the amperage of the device being used and the length of the cord.

Table 2

Current/Power		**Maximum Extension Cord Length**			
Amps at 240V	Load (watts)	#10 Ga. Cord	#12 Ga. Cord	#14 Ga. Cord	#16 Ga. Cord
10	2400	250'	150'	100'	75'
20	4800	125'	75'	50'	25'
30	7200	60'	35'	25'	10'
40	9600	30'	15'	10'	*
50	12000	15'	*	*	*

⚠ WARNING:
Use of under sized extension cords can cause electric shock, fire, or damage to connected devices.

3. All extension and appliance cords must be in good condition and not worn, bare, frayed, or otherwise damaged.

⚠ WARNING:
Use of damaged electric cords can cause electric shock or fire.

Note: If an extension cord becomes hot to the touch, it is overloaded or damaged and must be replaced.

Northern Tool is NOT responsible for damage or injury resulting from customer use of inadequate extension cords.

4. Select a Suitable Site

Before using the generator, you must select a suitable **OUTDOOR** location for installation and operation. This location should meet all the criteria listed below.

⚠ WARNING:
You must choose a suitable site for operating your generator to avoid equipment damage and/or injury and possible death from carbon monoxide poisoning, electric shock, or fire. Choose a site that meets all the criteria specified.

Dry, level surface	**The generator should be positioned on a dry, firm, level surface.** Ensure that the generator sits level and will not slide or shift during operation. If applicable, block the generator's wheels to prevent sliding and shifting.
Outdoors only – dangerous carbon monoxide exhaust	**⚠ WARNING: Carbon monoxide poisoning hazard** The exhaust from your generator contains carbon monoxide (CO), a poisonous gas that can kill. You cannot smell it, see it, or taste it. *Carbon monoxide exhaust is given off whether you are using gasoline, natural gas, or propane as the fuel source to power the generator.* Follow the directions below for choosing a location to operate your generator to avoid carbon monoxide poisoning. **The location you choose to operate the generator must be OUTDOORS and at least 20 feet from the home, away from windows, vents, and air intakes, to allow proper ventilation. If you start to feel sick, dizzy, or weak while using the generator, shut off the engine and get to fresh air RIGHT AWAY**: • Never run the generator inside any closed or semi-enclosed spaces (even if outdoors), including homes, garages, basements, sheds, or boxes. *These spaces can trap poisonous gases, even if you run a fan or open windows.* • Never place the generator immediately adjacent to a building or other structure – allow at least 20 feet clearance. • Place the generator so that the exhaust fumes will not be directed towards people or building air intakes. • Ensure that working, battery-operated or battery back-up carbon monoxide alarms are used in any dwelling/structure that is in close proximity to the running generator. • Note that this generator is NOT designed or approved for use in vehicles or marine applications. Never run the generator inside RVs or other vehicles, on boats, or on pick-up truck beds. **⚠ WARNING:** Never attempt to attach ductwork to the muffler system to allow for installation inside an enclosure. This could cause hot air deflection, heat build-up, and increased exhaust back-pressure, resulting in possible exhaust leakage or damage to the generator.

Adequate cooling ventilation	**The generator needs adequate, unobstructed flow of air to allow for proper cooling of engine and generator head.** **⚠ WARNING:** Heat build-up from inadequate ventilation can result in fire, posing a serious risk to nearby persons and structures. • Situate so there is adequate clearance around generator to allow for cooling airflow so that heat does not build up. • Never place the generator immediately adjacent to large objects or structures – allow at least a 7' clearance. • Do not run the generator in close proximity to other heat-generating equipment, such as another generator. The combined heat that is generated may raise air temperature in the immediate area and there will not be adequate cooling ventilation. • Do not allow debris to accumulate and block airflow. • Do not operate with a tarp, blanket, or cover surrounding the generator.
No wet conditions	**Choose a location where the generator will NOT be exposed to rain, snow, or direct sunlight.** Exposure to water can cause electric shock. You *may* operate the generator under an outdoor, canopy-like structure of heat-resistant material that is open on all sides. Make sure that all parts of canopy are at least 7' from exhaust and allow for adequate clearance above generator so that heat does not build up.
Hot exhaust clearance	**The exhaust gas from your generator is extremely hot and can cause combustible materials to catch on fire.** • Make sure your generator's exhaust system is at least 7 feet from all combustible materials and structures. • The generator is equipped with a spark arrestor and should be in good working order if the generator will be used near any ignitable forest, brush, or grassy land. Make sure you comply with applicable local, state, and federal codes. 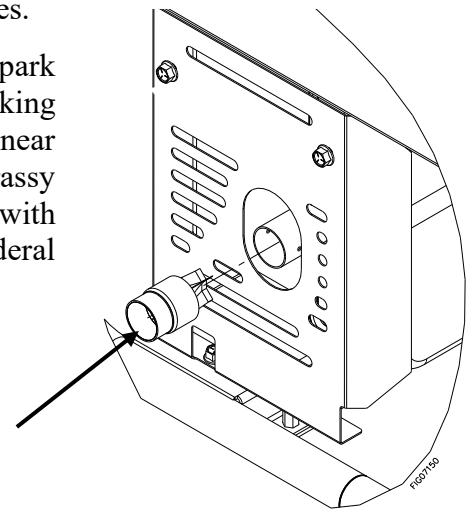 Spark arrestor • Keep a fire extinguisher rated "ABC" nearby. Keep it properly charged and be familiar with its use.
Away from dust/dirt	**Do not use the generator in extremely dusty or dirty conditions.** Excessive dust and dirt can cause premature failure of the machine.

Hearing protection	**Generators can produce noise levels of up to 95 dB in close proximity, which can be dangerous to human hearing with prolonged exposure.** Hearing protection may be required for persons working within 15-20 feet of the running generator for an extended period of time. **⚠ WARNING:** Never attempt to attach ductwork to the muffler system to lower noise levels. This could cause hot air deflection, heat build-up, and increased exhaust back-pressure, resulting in possible exhaust leakage or damage to the generator.

5. Grounding the Generator

Always ensure the generator is properly grounded to prevent electrical shock.

You must always ground the generator by the following method when using the generator as a portable electrical source:

1) Drive a 3/4" or 1" copper pipe or rod into the ground close to the generator. The pipe/rod must penetrate moist earth – the depth required will be dictated by local soil conditions. Consult with an electrician.
2) Connect an approved ground clamp to the pipe.
3) Install a 12-gauge (1654400), 10-gauge (1654403), or 8-gauge (1654404, 1654406) wire from the ground clamp to the generator grounding post located on the electrical panel.
4) Do not connect the generator grounding post to a water pipe or a ground used by a radio system.

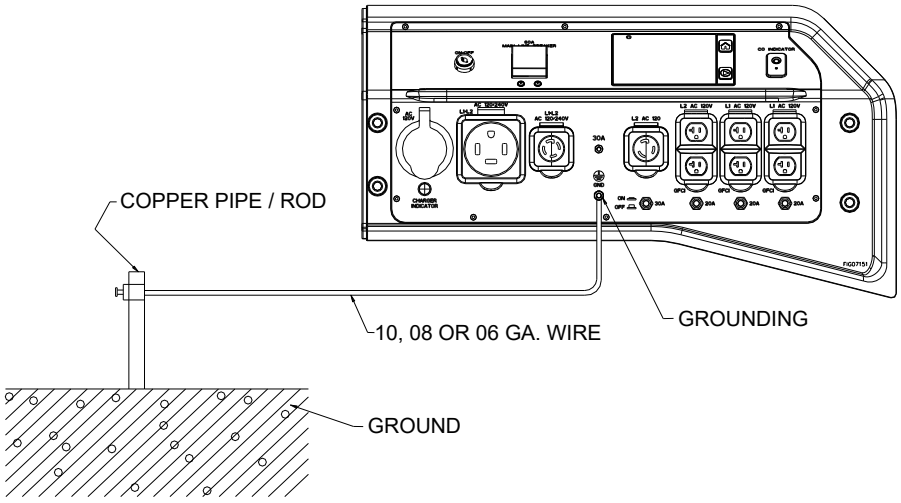

If a licensed electrician installs the generator with a connection to your building's electrical circuit for use as a back-up power system, grounding may alternatively be completed through the building's grounding system. Ask your electrician. If the generator is not grounded through your building's electrical system, follow the procedure above.

⚠ WARNING:
Operating the generator when it is not properly grounded can result in electrical shock.

6. Battery Installation

Your generator's engine is equipped with an electric starter. (Except 1654400) A battery is included and both battery cables must be connected. Follow the instructions detailed below for connecting and disconnecting the battery.

- Remove large plastic panel. The panel is secured with two ¼-turn fasteners and multiple push-in pegs. Turn the fasteners 90 degrees and gently pull the panel to remove.
- Remove battery strap and set battery on ground.
- Attach battery cables using supplied fasteners (included in hardware bag)
- Replace battery with rubber strap.
- Close and secure plastic panel.

⚠WARNING: Battery hazards

Batteries are hazardous because they contain caustic acid, can emit explosive gases, and can cause electric shock. Caution must be exercised when making connections to a battery to avoid shock and contact with the acid, and to prevent any sparking that could lead to an explosion.

ALWAYS follow the general battery safety rules and instructions listed below.

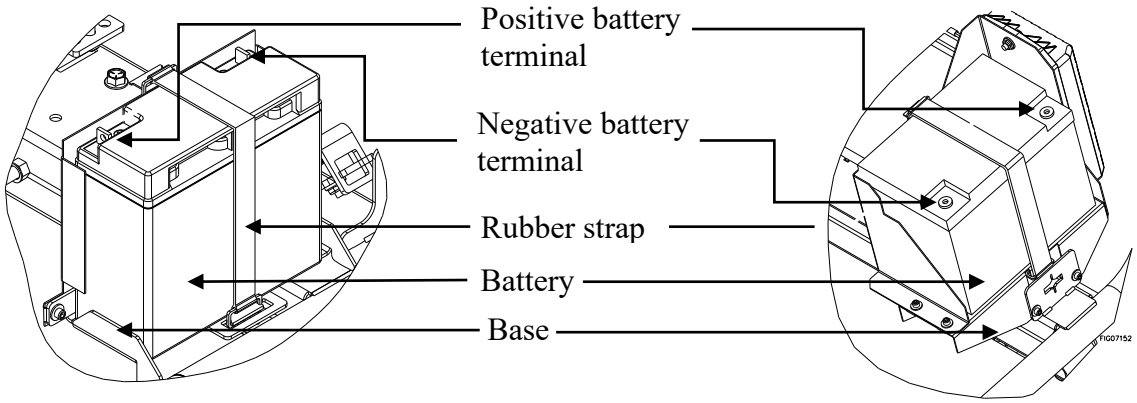

1654403 1654404 & 1654406

General Battery Safety Rules	• ALWAYS use eye protection when handling batteries. • NEVER smoke or work near sparks or other sources of ignition. • NEVER touch both battery terminals at the same time with your hand or any non-insulated tools. • If battery acid contacts skin or clothing, flush immediately with water and neutralize with baking soda.
Connecting the battery	Always connect the cables in the following sequence to avoid possible shock: 1. Find the battery cables attached to the engine. 2. Connect the ***red*** cable to the ***positive*** **(+)** terminal of the battery. 3. Then connect the ***black*** cable to the ***negative*** **(-)** terminal of the battery.
Disconnecting the battery	Always disconnect cables in the following sequence to avoid possible shock. 1. First, disconnect the ***black*** cable from the ***negative*** **(-)** terminal of the battery. 2. Next, disconnect the ***red*** cable from the ***positive*** **(+)** terminal of the battery.

Operation

Once you have set up your generator for use, it is time to start your generator. The following are the procedures necessary for safe, successful operation of your generator.

Operation Procedures

1. **General Safety Rules for Operation**
2. **Preparing for Operation**
3. **Starting the Engine**
4. **Checking Generator Output**
5. **Connecting Electrical Loads (Portable Power Generation)**
6. **Stopping**
7. **Storage & Exercise of Generator**
8. **Display**
9. **Carbon Monoxide Control System**
10. **Battery Charger**

Each of these procedures is discussed in detail below:

1. General safety rules for operation

Before starting the generator, review the following general safety rules for operation:

⚠ **WARNING**:
Failure to follow safety rules may result in serious injury or death to the operator or bystanders.

- **Know proper use/how to stop.** Be thoroughly familiar with proper use of the equipment and all generator controls, output receptacles, and connections. Know how to stop the generator quickly if needed (see "Operation, Step 6 - Stopping the Engine").
- **Instruct operators**. The generator owner must instruct all operators in safe generator set-up and operation. Only trained adults should set up and operate the generator – Do not let children operate.
- **Intended use**. Carefully read about and understand the intended use of this generator. Do not use for other purposes, as unforeseen hazards or equipment damage may result.
- **Under the influence**. Never operate, or let anyone else operate, the generator while under the influence of alcohol, drugs, or medication.
- **Safety equipment / controls**. Do not operate the generator unless all safety covers, guards, and barriers are in place and in good working order, and all controls are properly adjusted for safe operation.
- **Damaged**. Do not operate the generator with damaged, missing, or broken parts.
- **Modifications**. Do not modify the generator in any way. Modifications can create serious safety hazards and will also void the warranty.
- **Engine speed**. Never attempt to modify the engine speed setting. The engine speed is preset at 3600 RPM for safe and optimal performance of the generator. If speed needs adjusting, it must be done by factory-authorized personnel.
- **External fuel sources**. Never attempt to connect external gasoline/diesel sources in order to increase engine run time. Larger tank at pressure or higher elevation will cause gasoline to leak from carburetor during operation. Fire or explosion could result.

Operation

- **Malfunction during operation.** Immediately turn off the generator if any of the following conditions arise during operation:
    - Excessive change in engine speed, slow or fast
    - Overheating in load connecting devices
    - Sparking or arcs from generator
    - Loss of electrical output
    - Receptacle damage
    - Engine misfire
    - Excessive vibration
    - Flame or smoke
    - Abnormal noise

- **Adjusting / repairing**. Always turn off generator and remove spark plug(s) or spark plug wire(s) before working on the generator to prevent accidental starting. (See Maintenance & Repair section of this manual for instructions on how to do this.)

- **Carbon monoxide poisoning**. The running engine gives off carbon monoxide, a poisonous gas that can kill you. You CANNOT smell it, see it, or taste it. Follow all instructions for site selection and positioning the generator and avoid inhaling the exhaust. If you start to feel sick, dizzy, or weak while using the generator, shut off the engine and get to fresh air RIGHT AWAY. See a doctor. You may have carbon monoxide poisoning.

- **Other exhaust dangers**. This product contains or emits chemicals known to the State of California to cause cancer, birth defects or other reproductive harm. Avoid inhalation of exhaust.

- **Wet conditions.** Do not operate the generator or handle any electrical equipment while standing in water, while barefoot, while hands are wet or while in the rain or snow. Electric shock may result.

- **Ground fault circuit interrupter.** Always use a ground fault circuit interrupter (GFCI) protected extension cord (or outlet, if generator is equipped) in damp or highly electrical conductive areas and on construction jobsites to prevent electrical shock.

- **Avoid contact**. Avoid contact with bare wires, terminals, connections, etc. while the unit is running.

- **Electric shock accident.** If an electric shock accident occurs, immediately shut down the source of electrical power. If this is not possible, attempt to free the victim from the live conductor. Avoid direct contact with victim. Use a nonconducting implement, such as a dry rope or board, to free the victim from the live conductor. Apply first aid and get immediate medical help.

- **Smoking/sparks**. Never smoke near the running generator, and never operate near sources of sparks or flames.

- **Hot muffler**. Never touch hot muffler, hot exhaust manifold, or engine cooling fins. Exhaust and engine parts can be very hot and will burn you.

- **Moving parts**. Keep hands, feet, and apparel away from drive belts, fans, and other moving parts. Never remove any drive belt or fan guard while the unit is operating.

Static electricity and filling the gasoline tank:

Static electricity can initiate from ungrounded gasoline tanks or containers, from flowing gasoline, and from persons carrying a static electric charge.

Static electricity can explosively ignite gasoline vapors that are present during the fueling process, resulting in serious burns to nearby persons. To avoid static electricity while fueling, certain steps must be followed before and during the fueling process to minimize and safely dissipate static charge build-up:

- ***Touch a grounded metal object before starting***. Always dissipate static charge from your body before beginning the fueling process by touching a grounded metal object at a safe distance away from fuel sources.
- ***Use a portable container to fill tank***. Never fill the generator's gas tank directly from the fuel pump – the generator's tank is not grounded and the high velocity flow of gasoline from a fuel pump can cause static electric build-up. Use an approved portable container to transfer gasoline to the generator's tank.

- ***Fill container on the ground.*** Never fill the portable gas container while it is sitting inside a vehicle, trailer, trunk, or pick-up truck bed. ALWAYS place container on the ground to be filled.
- ***Keep nozzle in contact with container***. Keep nozzle in contact with the portable container at all times while filling. Manually control the flow of gasoline; do NOT use the nozzle's lock-open device.
- ***Use a portable container made of metal or conductive plastic.*** It will dissipate charge to ground more readily.

About static electricity and fueling

Many common objects can accumulate and retain a static electric charge. Objects made of non-conductive materials (e.g. plastics) easily accumulate and retain static electric charge, as can objects made of conductive material (e.g. metal, water) if they are not electrically grounded. The static electric charge on an object, such as a human body or plastic fuel tank/container, can reach as high as several thousand volts!

A static electric spark can be generated if the static electric charge stored on an object "jumps" to another, less charged object. Such a spark can ignite invisible gasoline vapors that are present during fueling situations.

Typical sources of static electric hazards during fueling

The following objects can accumulate a static electric charge and cause an ignition spark in typical fueling situations:

1) Ungrounded tanks/containers. Any ungrounded fuel tank or container can accumulate a static electric charge as a result of contact with other objects or friction during transportation. This static electricity can discharge as a spark to the grounded gasoline dispenser nozzle, as the nozzle is first brought close to the tank/container at the beginning of the fueling process.
2) Flowing gasoline. Most people are not aware that gasoline accumulates static electric charge while flowing through a hose or pipe. This charge then transfers to and accumulates in the gas tank or container that is being filled. The total amount of charge accumulation depends on the amount of gas pumped into the container, the speed with which it is pumped, and whether or not the tank/container is grounded. If sufficient static electric charge accumulates in the fuel tank or container during the fueling process, the tank/container may discharge a spark to the grounded gasoline dispenser nozzle.
3) Persons. A person dispensing the gasoline can carry a static electric charge on their body, typically resulting from contact with their car seat or electronics. The static electricity can discharge as a spark between that person's hand and either the grounded dispenser nozzle or the fuel tank opening.

2. Preparing for Operation	
Position generator	**Position generator in accordance with the instructions given in "Installation & Initial Set-up, Step 4: Select a Suitable Site" of this manual.** To move generator, grasp handle grips with both hands and rotate handle to horizontal position until the lock levers latch. Generator can be pushed or pulled into position using the handles. To lower handle, press both handle lock levers to release handle and fold down. 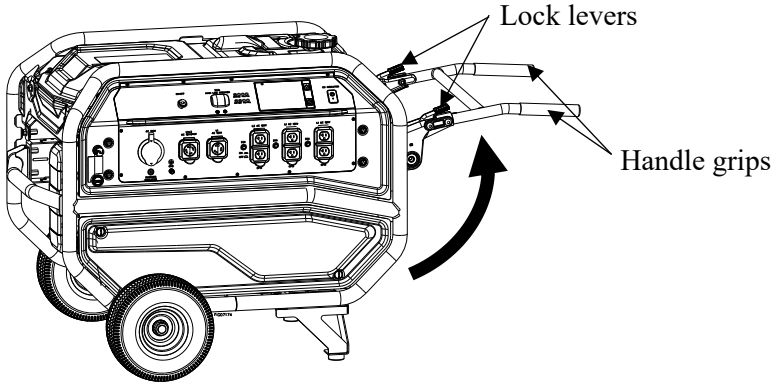 Operate outside only, on dry, level ground with at least 20 feet from the home, away from windows, vents and air intakes, to allow proper ventilation. **⚠WARNING: Carbon monoxide poisoning hazard** Generators give off carbon monoxide exhaust, a poisonous gas that can kill. You CANNOT smell it, see it, or taste it. ONLY run generator OUTDOORS and at least 20 feet from the home, away from windows, vents and air intakes, to allow proper ventilation. If you start to feel sick, dizzy, or weak while using the generator, shut off the engine and get to fresh air RIGHT AWAY. NEVER run generator inside any enclosed or semi-enclosed spaces, including homes, garages, basements, sheds, boxes, pick-up truck beds, RVs, or boats. These spaces can trap poisonous gases, EVEN if you run a fan or open windows. *Carbon monoxide exhaust is given off whether you are using gasoline, natural gas, or propane to power the generator.*
Ground generator	**Make sure the generator is grounded in accordance with instruction given in "Installation & Initial Set-up, Step 5: Grounding the Generator" of this manual.** **⚠WARNING: Electric shock hazard** Always ensure generator is properly grounded to prevent electrical shock.
Perform scheduled maintenance as needed	**Make sure that any regular maintenance has been performed as prescribed in this manual in the "Maintenance & Repair" section.** **Refer to the engine owner's manual for engine maintenance instructions**
Check/add oil	**Check the oil level using the dipstick and add oil as needed.** Using a funnel, add oil up to the FULL mark on the dip stick with the recommended oil type for your engine and expected ambient conditions. (See engine Owner's Manual for oil type and capacity, and more detailed oil check/fill instructions.)

	⚠WARNING: Burn hazard Never open oil port while engine is running. Hot oil can spray over face and body. *Notes:* o *Low oil shutdown feature prevents the generator from starting without sufficient oil.* o *Engine is shipped without oil. You must add oil before first use.* IMPORTANT: Under long, continuous-run operating conditions, be prepared to: • Check engine oil level every time you refuel the engine. • Change oil after the first 20 operating hours, and at least every 100 operating hours thereafter, or as directed in engine owner's manual.
Check/fill gasoline tank	**Check the gasoline level in the generator's tank**. **If needed, fill tank with fresh unleaded gasoline from a portable container,** after first reading the warnings and instructions below. **⚠ WARNING**: **Gasoline fire/explosion hazard** Gasoline is highly flammable and explosive. Heat, sparks, and flames can ignite gasoline vapors, which can become widespread during fueling. A flash fire and/or explosion could result and cause serious injury or death. Use extreme care when handling gasoline. Carefully follow all the instructions in this section to avoid the following conditions which could result in gasoline ignition: • gas vapor collection inside enclosures. • static electric sparks. • sparks from electric wiring, batteries, or running engines. • sources of heat (such as a hot engine or exhaust). • open flames, including pilot lights. 1) Before starting, review the following general safety precautions for fueling: a) Never pump gasoline directly into the generator's gas tank at a gas station – high velocity flow from the pump could result in a static electric build-up in the generator's tank. Always use a portable container to fill the tank. *See warning box about static electric spark hazards below.* b) Fill gasoline tank OUTDOORS – never indoors. c) Stay away from all sources of heat, sparks, and flames. Do not smoke. 2) Turn generator engine off and allow to cool for at least two minutes before removing gas cap. Note: A running or still-hot engine is hot enough to ignite fuel. 3) Remove generator gasoline cap. 4) Add gasoline through the fill opening: - Use only an UL-approved portable gasoline container to transfer the gasoline to the generator's tank. Follow the safety warning and instructions below for avoiding static electric sparking. - Do NOT overfill the gasoline tank. Fill to bottom of fill neck to allow for fuel expansion.

⚠WARNING: Static electric spark hazard
A static electric spark can explosively ignite gasoline vapor, resulting in a flash fire that could cause serious injury or death.

To avoid static electric sparking while filling the gasoline tank, **the following steps must be followed to minimize and safely dissipate static electric charge build-up before and during the fueling process**:

- Always dissipate static charge from your body before beginning the fueling process by touching a grounded metal object at a safe distance from fuel sources.
- Never fill the generator's gas tank directly from the fuel pump – the generator's tank is not grounded and high velocity flow from the pump can cause static electricity build-up. Use an approved portable container to transfer gas to the generator's tank.
- Never fill the portable gas container while it is sitting inside a vehicle, trailer, trunk, or pick-up truck bed. ALWAYS place container on the ground to be filled.
- Keep nozzle in contact with portable container while filling. Manually control the flow of gasoline; do NOT use the nozzle's lock-open device.
- A portable container made of metal or conductive plastic is preferred because it dissipates charge to ground more readily.

5) Clean up gasoline spills /splashes immediately.

- ❖ If possible, move the generator away from spilled gasoline on the ground.
- ❖ Wipe up spilled gasoline and wait 5 minutes for excess gasoline to evaporate before starting engine.
- ❖ Gasoline soaked rags are flammable and should be disposed of properly.
- ❖ If gasoline is spilled on your skin or clothes, change clothes and wash skin immediately.

6) Replace gasoline cap securely before starting engine.

7) Store extra gasoline in a cool, dry place in an UL-approved, tightly sealed container.

IMPORTANT:
For continuous operation, be prepared to check and refuel the engine on a regular basis. Run-times will vary based on model and actual loads, but as a rough guide, a tank of gasoline should last about 7 hours under 100% load and about 11 hours under 50% load.

Inspect Fuel System / Check for Leaks

Inspect fuel system & check for leaks BEFORE starting generator.
Do not start generator until all needed repairs have been completed.

⚠WARNING: Fuel leak hazard
Gasoline is highly explosive and fuel leaks can result in fire or explosions. You can be burned and seriously injured if the fuel system is not properly hooked up or there is a fuel leak when you start the engine.

Inspect the entire fuel system.
Look for:

- signs of leaks or deterioration,
- chafed or spongy fuel hose,

	• loose connections, • loose or missing fuel hose clamps, • a damaged gasoline tank, or • a defective gasoline shut-off valve.
Personal Protection	1) Hearing can be damaged from prolonged, close-range exposure to the type of noise produced by this generator. **The use of ear plugs or other hearing protection device is recommended** for persons working within 15-20 feet of the running generator for an extended period of time. 2) Loose or dangling apparel can become entangled in moving parts. Metal jewelry can conduct electricity. **Never wear jewelry or loose-fitting clothing when starting or operating the generator.**

3. Starting the Engine

After you have completed the pre-start checklist procedures, you are ready to start the engine.

To start the engine:

1) Disconnect all loads to the generator.

2) Turn the gasoline line valve to the ON position.

3) For cold engine, move choke lever to full choke position. To restart a warm engine, move choke lever to half choke or to RUN position.

4) Start the engine:
   a. Recoil:
      - Move the engine on/off switch to the ON position.
      - Pull the starter grip lightly until you feel resistance, then pull the starter cord out briskly and rapidly. Allow starter cord to return slowly.
   b. Electric:
      - Turn the engine key to clockwise and hold it there until the engine starts.

      NOTE*: If the engine fails to start after 5 seconds, release key and wait 10 seconds before attempting to start again. Cranking the electric starter for more than 5 seconds continuously can overheat and damage the starter motor.*
      - Release the key when the engine starts.

5) When engine starts, move choke lever to RUN position.

6) Under long, continuous-run operating conditions, be prepared to:
   a. Check and refuel the engine on a regular basis. Run-times will vary based on model and actual loads, but as a rough guide, a tank of gasoline should last about 7 hours under 100% load and about 11 hours under 50% load.

      ⚠ **WARNING**:
      A running engine is hot enough to ignite fuel. Never add fuel or remove gas cap if engine is running or still hot. Let cool at least 2 minutes.

   b. Check engine oil level each time you refuel.
   c. Change oil after the first 20 operating hours, and at least every 100 operating hours thereafter, as directed in the engine owner's manual.

      ⚠ **WARNING:**
      Never open oil port while engine is running. Hot oil can spray over face and body.



4. Checking Generator Output

Although the speed of the engine was carefully adjusted at the factory so that the generator produces the proper voltage and frequency, **output voltage should be checked periodically to ensure the generator is working properly before connecting loads to the generator**.

> ⚠ **WARNING**:
> The generator must be run at the correct speed to produce the proper electrical voltage and frequency. Failure to do so could result in damage to equipment powered by the generator and possible injury to the individual.

Output voltage should be checked with a portable voltage meter:

1. Start engine and allow to warm up for five minutes. Do not connect any loads.
2. Use voltage meter to check output voltage at the generator's outlets/receptacles.
3. Measured voltage should be within the following ranges:
    a. 120V +/- 10% at 120V receptacles.
    b. 240V +/- 10% at 240V receptacles.
4. If measured voltage is not within the specified range, have generator adjusted by factory authorized personnel. Do not attempt to adjust the engine speed yourself.

NOTE: **Slight variation in voltage/speed with changing electrical loads**	All engines have a tendency to slow down when a load is applied. When electrical loads are connected to the generator, the engine is more heavily loaded and as a result the speed drops slightly. This slight decrease in speed, together with the voltage drop within the generator itself, results in a slightly lower voltage when the generator is loaded to its full capacity than when it is running with no load. Additionally, there may be small brief surges and drops in voltage as motors connected to the generator cycle on or off. The slight variation has no appreciable effect in the operation of motors, lights, and most appliances.

5. Connecting Loads

You will want to be careful when connecting loads so as not to overload the generator, especially if you are powering devices with motors that require a higher starting power load.

Instructions are provided below for connecting loads when you are using the generator:

- As a portable power source.
- Connected to a building as a back-up power source**.**

> ⚠ **WARNING**:
> Do not overload generator. Make sure that combined starting and running loads do not exceed rated capacity of generator. Overloading the generator can cause damage to the generator and attached electrical devices, and may result in fire.

Using as a Portable Power Source	**Connect electrical loads one at a time according to the following instructions:** 1. Allow engine to reach operating speed by allowing it to warm up for approximately 5 minutes before connecting electrical devices. 2. After engine is warmed up, begin by connecting the items that require the highest wattage first. The recommended sequence is as follows: a. Connect items with motors such as refrigerators, freezers, air conditioners, or small hand tools, one at a time. Let each motor stabilize before connecting the next device. b. Connect any lights you are planning on powering. c. Connect voltage sensitive equipment such as electronics via surge protectors. Plug devices such as TV's, computers, and microwaves into a UL listed voltage surge protector, then plug the surge protector into the generator.
Using as a Back-up Power Source for a Building	Each transfer switch installation will be unique. Proper instructions for how to safely bring the generator online with the building's electrical system should be provided by the installing electrician, who should also provide personal instruction to the owner/operator. Failure to follow the proper procedure as provided by the electrician could expose persons to the hazards noted above.

6. Stopping the Engine

Stop the engine using the following steps:

1. Disconnect all loads to the generator.
2. Turn engine on/off key counterclockwise to OFF position.
3. Turn gasoline line shut-off valve to OFF position.
4. Remove spark plug to prevent accidental starting of engine.

7. Storage & Exercise

When you are finished using the generator, you must:

- Disconnect all loads.
- Shut off fuel supply.
- Store the generator properly.
- Plan on exercising the engine regularly unless the generator is prepared for long-term storage.

Detailed instructions are provided below.

Disconnect loads & turn off fuel supply	**When you are finished using the generator, disconnect all loads and turn off fuel supply:** 1. Make sure all devices that were connected to the generator's outlets have been disconnected. 2. Check to be sure gasoline line shut-off valve is in OFF position.
Cool engine before storing	**Let engine cool for at least five minutes before storing.** A hot engine can be a fire hazard.
Choose a storage location	**Store the generator in a location that is:** o Clean and dry o Away from sources of heat, open flames, sparks, or pilot lights, even if the generator's fuel tank is empty. Residual fuel in the tank could ignite. o Away from extreme high or low temperatures.
Prevent accidental starting	**Remove key from starter (for electric start engines) and secure key in a safe location or remove spark plug**(s) in order to ensure the generator cannot be started accidentally in a storage location or by untrained persons.
Exercise generator every 4 weeks	**The generator should be exercised regularly.** At least every four weeks, start the engine and let it run for 10 to 15 minutes with a small load plugged in, such as a lamp or fan. Monthly exercising of the generator will: o Dry out any moisture that has accumulated in the windings. If left, this moisture can cause corrosion in the winding. o Ensure that the unit is operating properly should it be needed in an emergency.
Perform regular maintenance	**Perform periodic maintenance** as directed in this manual to keep the generator in safe working condition.

Prepare engine for long term storage if needed	**If you will not be able to exercise the generator regularly, you must prepare the engine for long term storage** to prevent gum deposits from forming and causing malfunction of the engine. Prepare engine for long term storage by: o **Removing all gasoline** from the tank and carburetor OR o **Adding fuel stabilizer** to the gasoline (following manufacturer's instructions) Fuel stabilizer steps: 1. Ensure gasoline tank is full. 2. Add fuel stabilizer to fuel tank. 3. Run engine at least 10 minutes after adding stabilizer to allow it to enter the fuel system. 4. Shut off engine. 5. Disconnect spark plug wire and remove spark plug. 6. Add one teaspoon oil through spark plug hole. 7. Place rag over spark plug hole and turn starter (or pull the recoil) a few times to lubricate the combustion chamber. 8. Replace spark plug, but do not reconnect the spark plug wire.

8. Display

The Display on the generator contains three screens (if equipped):

- Home Screen.
- Service Screen.
- Diagnostic Screen.

These screens can be toggled using arrow button on display.

All system alerts are also shown on this display.

Home Screen

The Home Screen gives information about the load that is connected, fuel level, and total run-time of the generator:

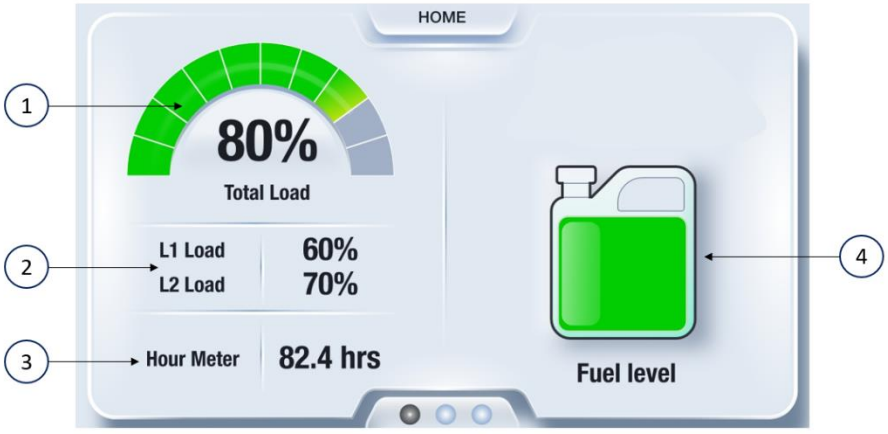

REFERENCE GUIDE		
1	Total Load Indicator	The percentage of the current load to the generator's total available load.
2	Load on each Line	The percentage of the current load to the total available load on each line.
3	Hour Meter	The amount of time for which your generator has been running.
4	Fuel Level	The amount of fuel remaining in the tank.

Service Screen

The Service Screen displays maintenance intervals and the time remaining before each service is due.

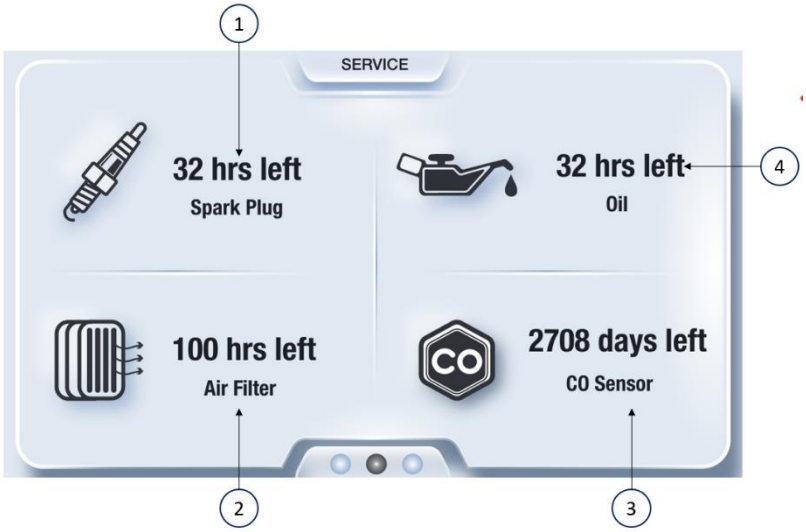

REFERENCE GUIDE		
1	Spark Plug	Number of hours remaining before changing the spark plug is required.
2	Air Filter	Number of hours remaining before changing the air filter is required.
3	CO sensor	Number of days remaining before changing the CO sensor is required. Note: The generator must be running to correctly show the number of days remaining.
4	Engine Oil	Number of hours remaining before changing the engine oil is required.

Diagnostic Screen

The Diagnostic Screen will display the generator's electrical information: Voltage, Current, and Frequency.

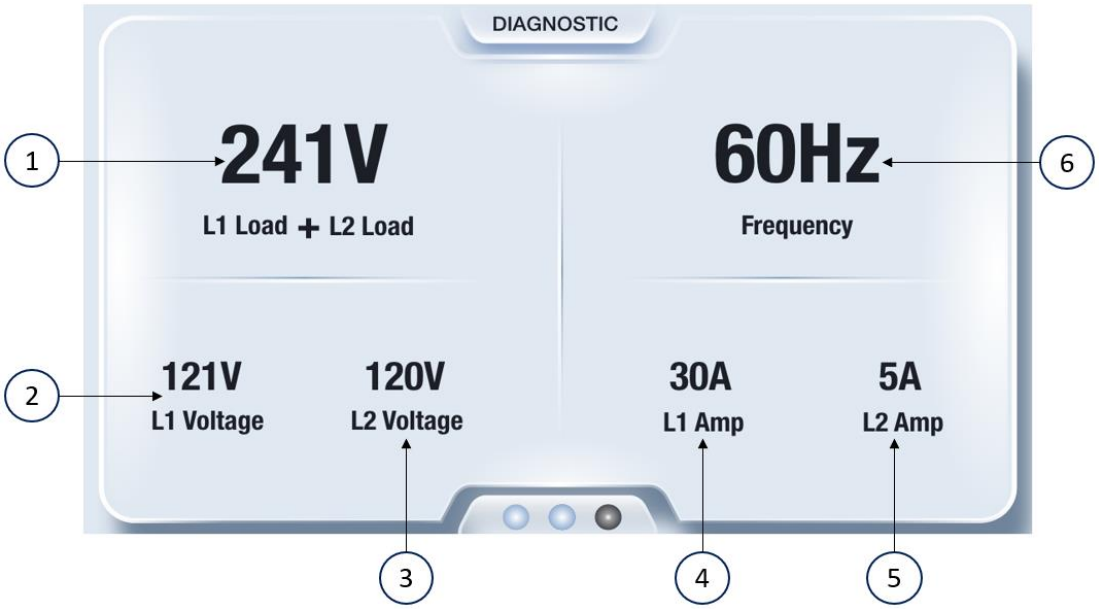

REFERENCE GUIDE		
1	L1Voltage + L2Voltage	The combined voltage supplied by the generator for Line 1 and Line 2.
2	L1 Voltage	The voltage supplied to Line 1.
3	L2 Voltage	The voltage supplied to Line 2.
4	L1 Amp	The amount of current supplied to Line 1.
5	L2 Amp	The amount of current supplied to Line 2.
6	Frequency (Hz)	The frequency of the voltage supplied by the generator.

Note: The receptacles on the control panel are labeled "L1" and "L2" to designate which line they are supplied by. If practical, loads should be split evenly between Line 1 and Line 2.

9. Carbon Monoxide Control System

Your generator is equipped with a carbon monoxide control system, which monitors the carbon monoxide levels in the environment near the generator and shuts down the generator when the carbon monoxide reaches dangerous levels.

Generators give off carbon monoxide, a poisonous gas that can kill you. You CANNOT smell it, see it, or taste it.

- ONLY run generator OUTDOORS and at least 20 feet from the home, away from windows, vents, and air intakes, to allow proper ventilation. If you start to feel sick, dizzy, or weak while using the generator, shut off the engine and get to fresh air RIGHT AWAY.
- NEVER run generator inside any enclosed or semi-enclosed spaces, including homes, basements, garages, sheds, boxes, RVs, boats, or pick-up truck beds. These spaces can trap poisonous gases, EVEN if you run a fan or open windows.

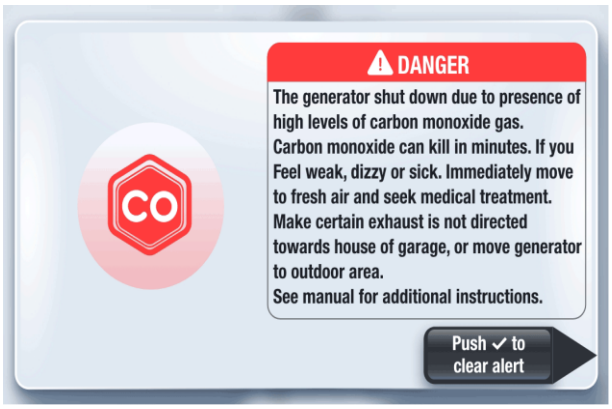

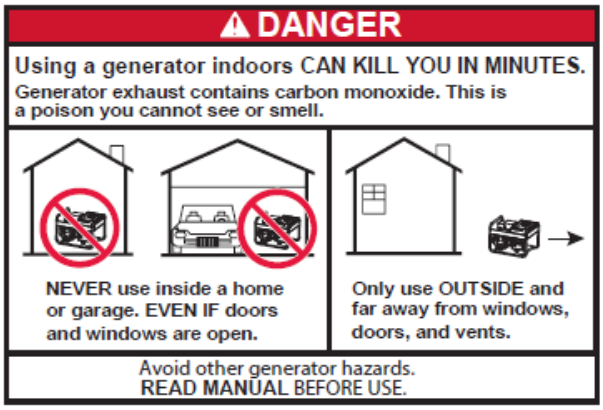

The Carbon monoxide control system will flash the above "**carbon monoxide poisoning**" notification on the LCD Display and shuts down the generator when the carbon monoxide is at dangerously high levels.

When the generator is shut down due to carbon monoxide poisoning it is mandatory to move the generator to an open outdoor area and point exhaust away. DO NOT run the generator in enclosed areas.

10. Battery Charger

The generator is equipped (except 1654400) with a charger inlet to recharge the on-board battery. The battery can be recharged or maintained by connecting an external power source to this inlet. Input is 120V.

- When the battery is charging, the charger indicator is Red.
- When the battery is fully charged, the charger indicator turns Green.

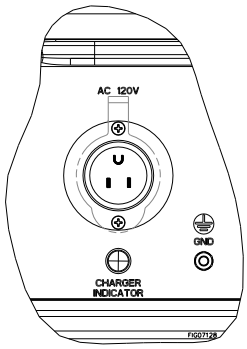

Maintenance & Repair

Inspect and maintain your generator as specified below to keep it in safe and optimal working order. Follow all safety rules and recommended maintenance steps.

⚠ WARNING

ALWAYS shut off the engine and disconnect the spark plug(s) before cleaning, adjusting, or servicing the generator. Make sure all guards and shields are replaced before using.

Note: The generator head is a brush style head and requires maintenance. The bearing is a heavy-duty sealed ball bearing, which requires no maintenance or lubrication.

Maintenance & Repair	
Follow safety rules	**Read and follow these safety rules whenever you will be servicing the generator:** • **Turn off generator.** Always turn off generator and remove spark plug(s) or spark plug wire(s) before working on the engine or generator to prevent accidental starting. • **Replace guards.** Make sure all guards and shields are replaced after servicing the generator. • **Repair.** Major service, including the installation or replacement of parts, should be performed only by a qualified electrical service technician. Obtain factory approved parts from NorthStar Product Support at 1-800-270-0810. • **Replacement parts**. If a part needs replacement, only use factory approved repair parts. Replacement parts that do not meet specifications may result in a safety hazard or poor operation of the generator and will void the warranty.
Perform engine maintenance	**Perform engine maintenance as specified in the engine owner's manual.** Engine maintenance items include: 1. Changing oil and oil filter 2. Air filter check/replacement 3. Spark plug cleaning and replacement 4. Fuel filter check/replacement 5. Fuel tank cleaning.
Check receptacles	**Check receptacles before each use to make sure they are not cracked or broken.** If a receptacle is cracked or otherwise damaged, do not use until replaced with an authorized factory part. Using cracked or damaged receptacles can be both dangerous to the operator and destructive to the equipment.
Inspect fuel system / check for leaks	**Inspect the fuel system and check for leaks on a regular basis.** 1) Inspect the entire fuel system. Look for: signs of leaks or deterioration, chafed or spongy fuel hose, loose connections, lose or missing fuel hose clamps, damaged gasoline tank, or defective gasoline shut-off valve.

Check GFCI (if equipped)	**Once a month, test the Ground Fault Circuit Interrupter (GFCI) to protect against electrical shock due to failure of the GFCI.** (Only for those models equipped with GFCI.) To test the GFCI: 1. Depress the TEST button. The RESET button should extend from the receptacle. If the RESET button does not extend, contact Northern Tool for replacement parts. 2. Restore power to the GFCI by firmly pressing the RESET button back into the receptacle until an audible click is heard.
Clean & inspect spark arrestor	**Clean and inspect the spark arrestor on muffler.** If the engine has been running, the muffler and spark arrestor will be hot. Allow those to cool before servicing the spark arrestor. Tools needed: Wire brush and Philip's head screwdriver. 1. Remove the securing screw from the side of the spark arrestor. 2. Slide the spark arrestor off the exhaust pipe. 3. Inspect the spark arrestor mesh (screen). Replace spark arrestor if mesh (screen) is damaged. 4. Use a wire brush to lightly remove the carbon deposits from the spark arrestor mesh (screen). Be careful to avoid damaging the mesh (screen). 5. Remove any fiberglass insulation material collected in the spark arrestor screen. This is normal during the break-in period of the muffler. 6. Slide the spark arrestor over the exhaust pipe and align the hole to the 12 o'clock position. 7. Secure the spark arrestor using the supplied screw.
Keep generator clean	**Keep generator clean.** If dust or debris accumulates on the generator, clean the generator with a damp cloth or soft bristle brush. Do not allow air intakes to become blocked. Note: Do not spray generator with a garden hose or pressure washer. Water may enter the generator and cause damage to the rotor, stator, or internal windings.
Recharge and maintain battery (If electric start)	**Inspect, recharge, and maintain your battery according to your battery manufacturer's instructions.** (Only for those models equipped with electric start.) Do not store with battery charger always connected. Batteries that are over-charged can boil themselves dry and produce excessive amounts of hydrogen, an explosive gas.
Brush Assembly Maintenance	**Inspect brushes every 12 months, or 200 hours.** **Replace brush assembly after 1000 hours of operation.** **Hours of operation and environmental conditions influence brush life.** Look for excessive or uneven wear if either condition is present, take the unit to a qualified repair technician.

Alerts
The generator's display (If equipped) will give timely alerts for safe operation and proper maintenance of the generator. The alerts are: 1. Replace Air Filter. 2. Replace Carbon monoxide Sensor. 3. Low Fuel. 4. Change Oil. 5. Oil + Filter Change required. 6. Replace Spark Plug.

Replace Air Filter



The engine air filter has reached the end of its life. Replace it to ensure proper operation of the generator. See engine owner's manual for details. After completion, reset the air filter change monitor on the service screen using below sequence:

1. Hold home button for 5 seconds until icon begins to blink.
2. Press arrow button to cycle through service icons to select air filter icon.
3. Hold arrow button for 5 seconds to reset hours.
4. Hold home button for 5 seconds to exit reset mode.

To remove air cleaner for 1654404/1654406, remove the front panel above the engine to access the air cleaner cover.

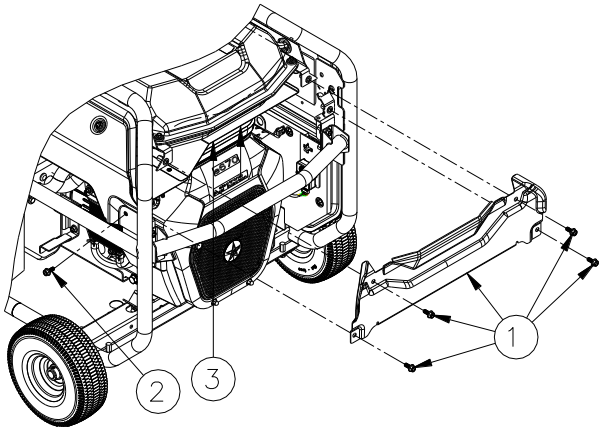

Replace Carbon Monoxide Sensor	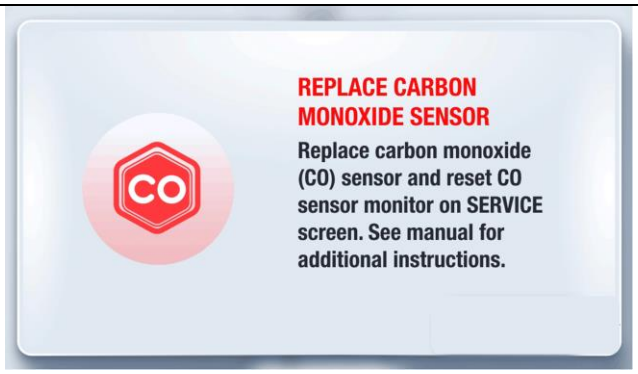 **The carbon monoxide sensor has reached the end of its life.** The generator will not operate when the CO sensor reached the end of its life. To ensure proper operation of the generator, replace the CO sensor prior to its expiration.
Low Fuel	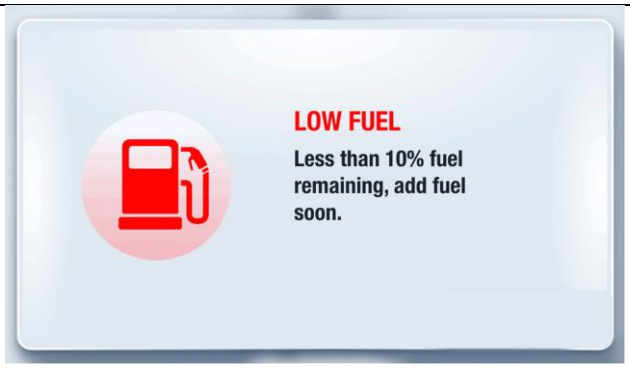 **The fuel level in your generator is at critically low levels.** Add fuel to ensure proper operation of the generator.
Change Oil	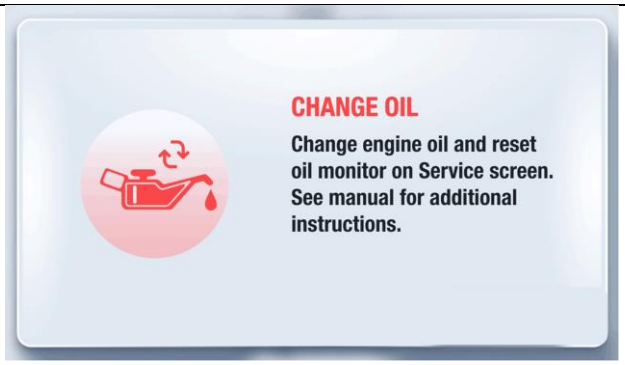 **An oil change is required for proper maintenance of the engine.** Refer to the engine owner's manual for instructions. After completion, reset the oil change monitor on the service screen using below sequence: 1.Hold home button for 5 seconds until icon begins to blink. 2.Press arrow button to cycle through service icons to select engine oil icon. 3.Hold arrow button for 5 seconds to reset hours. 4.Hold home button for 5 seconds to exit reset mode.

Oil + Filter Change required	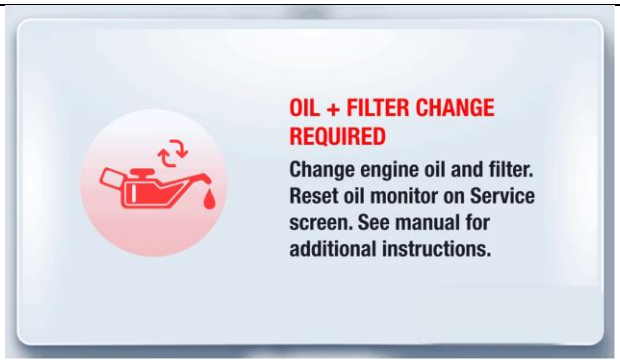 **An oil change and oil filter change are required for proper maintenance of the engine.** Refer to the engine owner's manual for instructions.
Replace Spark Plug	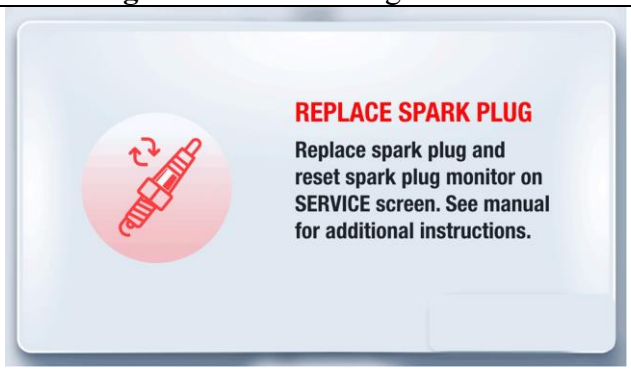 **The spark plug has reached the end of its life.** To ensure proper operation of the engine and generator, replace the spark plug. Refer to engine owner's manual for instructions. After completion, reset the spark plug monitor on the service screen. 1.Hold home button for 5 seconds until icon begins to blink. 2.Press arrow button to cycle through service icons to select spark plug icon. 3.Hold arrow button for 5 seconds to reset hours. 4.Hold home button for 5 seconds to exit reset mode.

IMPORTANT:

If a part needs replacement, only use parts that meet the manufacturer's specifications. Replacement parts that do not meet specifications may result in a safety hazard or poor operation of the generator.

Contact NorthStar Product Support at 1-800-270-0810 for any questions, problems, or parts orders.

Troubleshooting

Problem	**Possible Causes**	**Possible Remedies**
Engine will not start.	Low oil level.	The generator is shut down due to low or no engine oil. To ensure proper operation of the generator, make sure the generator is on flat ground and fill engine oil. See engine owner's manual for details.
	Fouled spark plug.	Clean or replace spark plug.
	Out of fuel.	Fill fuel tank.
	Stop switch in OFF position.	Place switch in ON position.
	Presence of high levels of carbon monoxide (CO) gas.	The generator has been shut down due to dangerous levels of carbon monoxide gas. Heed the carbon monoxide Danger specifications on the screen and on the product labels. The generator must be operated in an unobstructed, outdoor area.
	Low battery level (If equipped).	Recharge the battery using the charging inlet provided on the control panel using external power source.
	CO sensor expired	Replace CO sensor
Voltage too low.	a) Engine speed too slow. b) Generator is overloaded. c) Defective AVR	a) Bring generator to a qualified technician for adjustment. b) Reduce the load. (See Power Load Planning & Mgt. section of this manual.) c) Bring generator to a qualified technician for repair.
Circuit breaker trips.	a) Defective load connected to generator. b) Defective receptacle. c) Generator overloaded.	a) Disconnect load. b) Replace receptacle. c) Reduce the load. (See Power Load Planning & Mgt. section of this manual.)
Voltage too high.	a) Engine speed too high. b) Defective AVR	a) Bring generator to a qualified technician for adjustment. c) Bring generator to a qualified technician for repair.
Generator overheating.	a) Generator is overloaded. b) Insufficient ventilation.	a) Reduce the load. (See Power Load Planning & Mgt. section of this manual.) b) Make sure there is at least 7 feet of clearance on all sides of generator.

Troubleshooting

No output voltage.	a) Defective load connected to generator. b) Broken or loose wire. c) Defective receptacle. d) Defective stator. e) Defective rotor. f) Circuit breaker tripped. g) Defective AVR. h) Defective Brush Assembly.	a) Disconnect load. b) Bring generator to a qualified technician for repair. c) Replace receptacle. d) Bring generator to a qualified technician for repair. e) Bring generator to a qualified technician for repair. f) Bring generator to a qualified technician for repair. g) Reset circuit breaker and reduce loads connected to the generator. h) Bring generator to a qualified technician for repair.
Engine lacks power.	a) Generator is overloaded. b) Dirty air filter.	a) Reduce the load. (See Power Load Planning & Mgt. section of this manual.) b) Clean or replace air filter.
Engine shuts down during operation.	a) Out of fuel. b) Low oil level. c) Presence of high levels of carbon monoxide (CO) gas.	a) Fill fuel tank. b) Fill crankcase to proper oil level. c) The generator has been shut down due to dangerous levels of carbon Monoxide. Move the generator to a open area to ensure proper operation of the generator.
Rough rolling wheels	a) Bushings need grease b) Flat spots on wheels	a) Add grease b) This is normal. Flat spots will occur if generator is stored on a hard surface, particularly in warm temperatures. Spots will lessen as the generator is moved around.

Summary of Important Safety Information for Operation

This section provides a summary of the various safety procedures and measures that have been presented throughout the manual. Keep this summary handy and refer to it to refresh your memory about how to safely use your generator.

⚠ WARNING

Carefully read and make sure you understand the following safety information before using the generator. Improper use or maintenance of the generator can result in ***serious injury or death*** from ***carbon monoxide poisoning, electric shock, fire/explosion, or burns***.

General

- **Read manual.** Read this Owner's Manual and the engine Owner's Manual completely before attempting to set-up and use the generator. Serious injury or death can result if safety instructions are not followed.
- **Instruct operators**. The generator owner must instruct all operators in safe generator set-up and operation. Do not allow anyone to operate the generator who has not read the Owner's Manual and been instructed on its safe use.
- **Adults only.** Only trained adults should set up and operate the generator. Do not let children operate.
- **Under the influence**. Never operate, or let anyone else operate, the generator while under the influence of alcohol, drugs, or medication.
- **Intended use**. Carefully read about and understand the intended use of this generator. Do not use for other purposes, as unforeseen hazards or equipment damage may result.

Prohibition Against Modifications

Never modify or alter the generator in any way. Modifications can create serious safety hazards and will also void the warranty.

- **Engine speed**. Never attempt to modify the engine speed setting. The engine speed is preset at 3600 RPM for safe and optimal performance of the generator. If speed needs adjusting, it must be done by factory-authorized personnel.
- **Fuel/exhaust system**. Never modify the exhaust system, fuel tanks, or fuel lines. Carbon monoxide poisoning, fire, or explosion could result.
- **Guards**. Do not operate generator unless all guards and cover shields, which prevent access to moving parts and pinch points, are in place. Failure to guard the power transmission mechanisms ***may result in serious injury or death.***
- **Carbon monoxide sensor.** Never modify or tamper with the CO sensor or its wiring. Carbon monoxide poisoning and generator malfunction could result.

Safety – Installation & Set-up

Battery Safety (If equipped)

Batteries are hazardous because they contain caustic acid, can emit explosive gases, and can cause electric shock. *Caution must be exercised when making connections to a battery to avoid shock and contact with the acid, and to prevent any sparking that could lead to an explosion.* Follow safety rules carefully when connecting battery to generator:

- **Eye/skin protection.** Always wear eye protection and protective clothing when connecting or disconnecting battery.
- **Sparks/Smoking.** Never smoke or work near sparks or other sources of ignition.
- **Electric shock.** Never touch both battery terminals at the same time with your hand or any non-insulated tools.
- **Connection/disconnection sequence.** ALWAYS connect and disconnect cables to the correct battery terminals in the proper sequence:
  - When CONNECTING the battery, connect the RED cable to the POSITIVE terminal FIRST.
  - When DISCONNECTING the battery, disconnect the BLACK cable from the NEGATIVE terminal FIRST.
- **Acid/skin contact.** If battery acid contacts skin or clothing, flush immediately with water and neutralize with baking soda.

⚠ If leaving the charger plugged in for long times can cause a dangerous situation.

Summary of Important Safety Information for Operation (cont'd)

Installation / Initial Set-up Safety

- **Dry, level surface**. Situate generator on a dry, firm, level surface. Ensure generator sits level and will not slide or shift during operation. Block wheels if applicable.
- **Operate OUTSIDE only – dangerous carbon monoxide exhaust**! Generators give off carbon monoxide exhaust, a poisonous gas that can kill. You CANNOT smell it, see it, or taste it. ONLY run generator OUTDOORS and at least 20 feet from the home, away from windows, vents and air intakes, to allow proper ventilation. If you start to feel sick, dizzy, or weak while using the generator, shut off the engine and get to fresh air RIGHT AWAY. NEVER run generator inside homes, garages, sheds, or other semi-enclosed spaces. These spaces can trap poisonous gases, EVEN if you run a fan or open windows. Carbon monoxide is given off whether you are using gasoline, natural gas, or propane to power the generator.
- **No vehicle/marine use.** This generator is NOT designed or approved for use in vehicles or marine applications. Never run the generator inside RVs or other vehicles, on boats, or on pick-up truck beds.
- **Cooling ventilation**. The generator needs adequate, unobstructed flow of air to allow for proper cooling of engine and generator head. Situate so there is adequate clearance around generator to allow for cooling airflow. Do not allow debris to accumulate and block airflow.
- **Grounding**. Always ensure generator is properly grounded to prevent electrical shock. This generator is equipped with a grounding post. Always complete the grounding path from the generator to a copper pipe/rod driven into moist earth to a sufficient depth. Check with an electrician for local grounding requirements. If a licensed electrician installs the generator with a connection to your building's electrical circuit for use as a standby power system, grounding will be complete through the building's grounding system.
- **Isolate connection to building's electrical circuit**. Never plug the generator directly into a wall outlet. ANY connection to a building's electrical system MUST ISOLATE THE GENERATOR FROM UTILITY POWER via an UL-approved transfer switch installed by a licensed electrician in compliance with all applicable local building and electrical codes. If the generator is not isolated from the utility power system by such means, generator output will back feed into the utility power grid. This may result in injury or death to utility power workers or others who contact the lines during a power outage. It may also cause the generator to explode or cause fires when utility power is restored.
- **Wet conditions**. Water conducts electricity. Do not operate generator where it is wet. Operate on a dry surface under an open, canopy-like structure.
- **CO alarms**. Ensure that working, battery-operated or battery back-up carbon monoxide alarms are used in any dwelling/structure that is in close proximity to the running generator.
- **Hot exhaust - fires**. Exhaust from engine can be extremely hot and cause fire. Position muffler at least 7' from combustible objects during operation.
- **Spark arrestor**. Equip engine with a spark arrestor if generator will be used near any ignitable forest, brush, or grassy land. See the "Specifications" section of this manual to determine if your generator is already equipped. Make sure you comply with applicable local, state and federal codes.
- **Fire extinguisher**. Keep a fire extinguisher rated "ABC" by the National Fire Protection Association nearby. Keep it properly charged and be familiar with its use.

Safety – Before Use

Know how to operate

- **Review safety rules**. Before each use of this generator, review the "Rules for Safe Operation." Failure to follow these rules may result in serious injury or death.
- **Know how to operate.** Be thoroughly familiar with all controls and with the proper use of the equipment. Know how to stop the generator quickly if needed.

Personal protective equipment

- **Hearing protection**. The use of ear plugs or other hearing protection device is recommended for those in close proximity to the generator while it is operating.
- **Loose / dangling**. Loose or dangling apparel can become entangled in moving parts. Metal jewelry can conduct electricity. Never wear jewelry or loose-fitting clothing when operating the generator.

Gasoline Safety

Gasoline is highly flammable and explosive. You can be burned or seriously injured when handling fuel. Use extreme care when handling:

- **Fuel outdoors**. Fill fuel tank outdoors – never indoors. Gasoline vapors can ignite if they collect inside an enclosure. Explosion can result.

Summary of Important Safety Information for Operation (cont'd)

- **Use approved container**. Never pump fuel directly into engine at gas station. Static charge can build and ignite fuel. Use an UL approved fuel container to transfer gas to the engine.
- **Running / hot engine**. A running engine is hot enough to ignite fuel. Never add fuel or remove gas cap if engine is running or still hot. Stop the engine and allow to cool at least two minutes before adding fuel.
- **Heat / flames / sparks**. Stay away from sources of heat, flame, or sparks while adding fuel.
  Don't overfill. DO NOT overfill the gas tank. Fill to bottom of fill neck to allow for fuel expansion.
- **Replace cap**. Replace gas cap securely before starting engine.
- **Spills**. Clean up fuel spills immediately. Move generator away from spilled fuel on the ground. Wipe fuel off engine and wait 5 minutes for excess fuel to evaporate before starting engine. Gas soaked rags should be disposed of properly.
- **On skin / clothes**. If gasoline is spilled on your skin or clothes, change clothes and wash skin immediately.
- **Inspect fuel system**. Check fuel system on a regular basis. Look for signs of leaks, deterioration, chafed or spongy fuel hose, loose or missing fuel hose clamps, damaged fuel tank, or a defective fuel shut-off valve. Do not start generator until needed repairs have been completed.
- **Gasoline storage**. Store gasoline in a cool, dry place in an UL-approved, tightly sealed container.

Safety – During Use

- **Safety equipment / controls**. Always operate the generator with all safety covers, guards, and barriers in place and in good working order, and all controls properly adjusted for safe operation.
- **Know how to stop**. Be thoroughly familiar with proper use of the equipment and all generator controls, output receptacles, and connections. Know how to stop the generator quickly if needed.
- **Damaged**. Do not operate the generator with damaged, missing, or broken parts.
- **Carbon monoxide exhaust**. The running engine gives off carbon monoxide, a poisonous gas that can kill you. You CANNOT smell it, see it, or taste it. If you start to feel sick, dizzy, or weak while using the generator, shut off the engine and get to fresh air RIGHT AWAY. See a doctor. You may have carbon monoxide poisoning.
- **Other exhaust dangers**. This product contains or emits chemicals known to the State of California to cause cancer, birth defects or other reproductive harm. Avoid inhalation of exhaust.
- **Smoking/sparks**. Never smoke near the running generator, and never operate near sources of sparks or flames.
- **Check output voltage**. Check output voltage to ensure the generator is working properly before connecting loads to the generator. Failure to do so could result in damage to equipment powered by the generator and possible injury to the individual. Do not adjust output speed of engine to change voltage. If voltage is not within specified range, have generator repaired by factory authorized personnel.
- **Stabilize before connecting loads.** Start generator and let engine stabilize before connecting electrical loads.
- **Do not overload**. Do not overload the generator. Make sure that combined starting and running loads do not exceed rated capacity of generator or damage will result.
- **Protect sensitive electronics**. Some electronic equipment, such as computers and audio/video equipment, can be damaged by small fluctuations in the flow of power. Use a surge suppressor for any voltage-sensitive electronic equipment you will be powering with the generator.
- **Wet conditions.** Do not operate the generator or handle any electrical equipment while standing in water, while barefoot, while hands are wet or while in the rain or snow. Electric shock may result.
- **Ground fault circuit interrupter.** Always use a ground fault circuit interrupter (GFCI) protected extension cord (or outlet, if generator is equipped) in damp or highly electrical conductive areas and on construction jobsites to prevent electrical shock.
- **Electrical cords.** Use only UL-listed, outdoor-rated, three prong extension cords of the proper size. All extension and appliance cords must be in good condition and not worn, bare, frayed, or otherwise damaged. Use of inadequate or damaged electric cords can cause electric shock or fire.
- **Avoid contact**. Avoid contact with bare wires, terminals, connections, etc. while the unit is running.
- **Electric shock accident.** If an electric shock accident occurs, immediately shut down the source of electrical power. If this is not possible, attempt to free the victim from the live conductor. Avoid direct contact with victim. Use a nonconducting implement, such as a dry rope or board, to free the victim from the live conductor. Apply first aid and get immediate medical help.
- **Hot muffler**. Never touch hot muffler, hot exhaust manifold, or engine cooling fins. Exhaust and engine parts can be very hot and will burn you.
- **Moving parts**. Keep hands, feet, and apparel away from drive belts, fans, and other moving parts. Never remove any drive belt or fan guard while the unit is operating.
- **Refueling**. DO NOT refuel the engine until it has cooled at least two minutes.

Summary of Important Safety Information for Operation (cont'd)

- **Malfunction during operation.** Immediately turn off the generator if any of the following conditions arise during operation:
    - Excessive change in engine speed, slow or fast
    - Overheating in load connecting devices
    - Sparking or arcs from generator
    - Loss of electrical output
    - Receptacle damage
    - Engine misfire
    - Excessive vibration
    - Flame or smoke
    - Abnormal noise
- **Adjusting / repairing**. Always turn off generator and remove spark plug(s) or spark plug wire(s) before working on the generator to prevent accidental starting.

Safety – After use

- **Cool engine before storing.** Let engine cool for at least five minutes before storing. A hot engine can be a fire hazard.
- **Shut off fuel supply.** Make sure gasoline shut-off valve is in the OFF position.
- **Prevent accidental starting.** When generator is not in use, remove key from starter (key start engines) and secure in a safe location, or remove spark plug(s) in order to ensure that generator cannot be started in a storage location or by untrained persons.
- **Storage location.** Store the generator in a dry location away from sources of heat, open flames, sparks or pilot lights – such as water heaters, space heaters, furnaces, clothes dryers, or other gas appliances – EVEN IF the generator's gas tank is empty. Residual gasoline could ignite.
- **Exercise regularly.** Exercise generator every four weeks to dry out moisture that accumulates in the windings. If generator cannot be exercised on a regular basis, prepare generator for long term storage.
- **Periodic maintenance.** Perform periodic maintenance as directed in this manual to keep the generator in safe working condition.

Safety - Inspection/Maintenance

Inspect and maintain your generator on a regular basis and repair as needed to keep it in safe working condition:

- **Turn off generator**. Always turn off generator and remove spark plug(s) or spark plug wire(s) before working on the engine or generator to prevent accidental starting.
- **Replace guards / shields.** Make sure all guards and shields are replaced after servicing the generator.
- **Replacement parts.** If a part needs replacement, only use parts that meet the manufacturer's specifications. Replacement parts that do not meet specifications may result in a safety hazard or poor operation of the generator and will void the warranty.

Generator Exploded View Rev – G

Item #s 1654400, 1654403

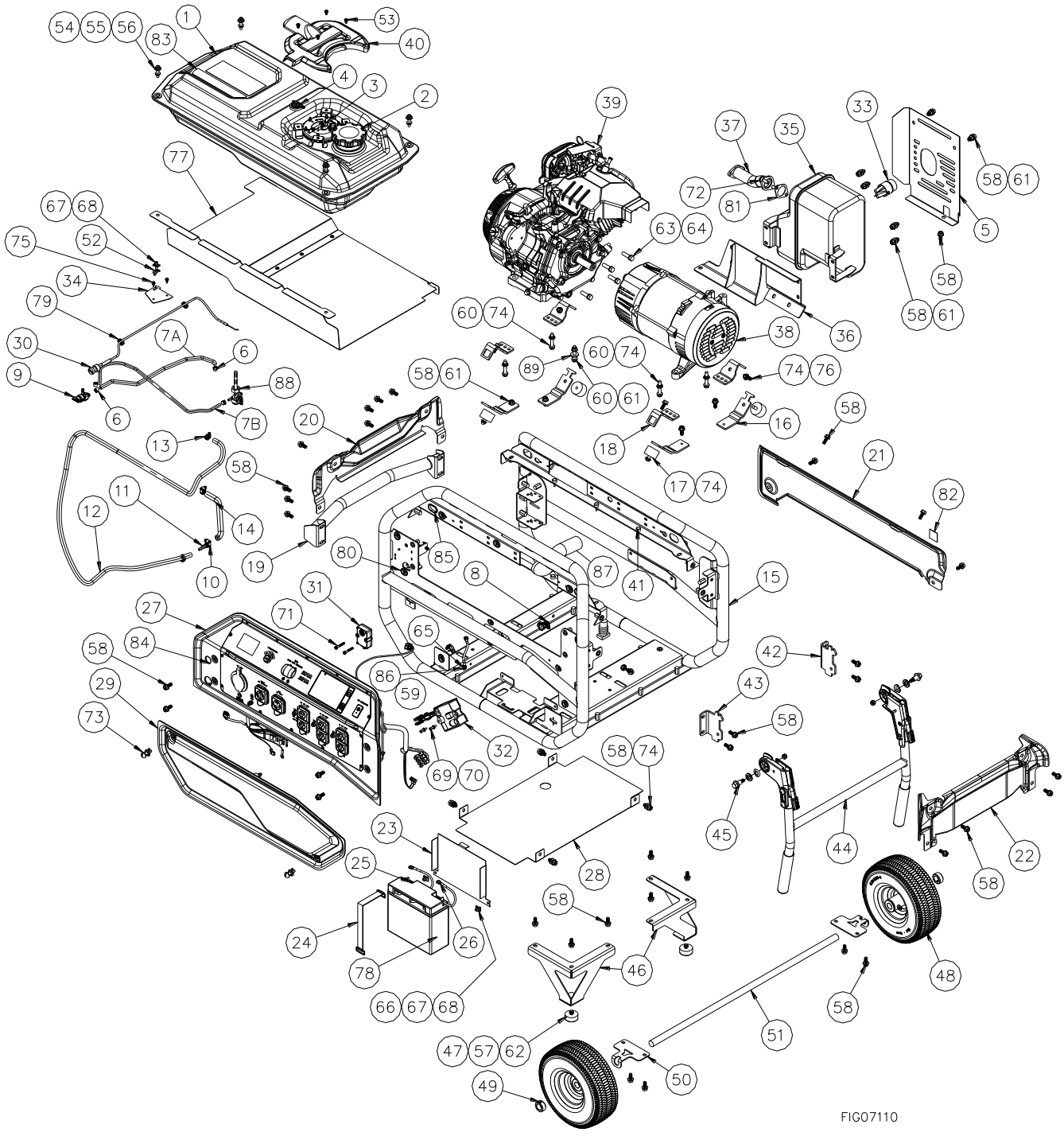

Generator Exploded View Rev – G

Item #s 1654400, 1654403

Ref #	Part #	Description	Qty	Used On
1	805877	Fuel Tank Assembly, 8 gal (Analog Fuel Gauge)	1	1654400
	805878	Fuel Tank Assembly, 8 gal		1654403
2	804679	Cap, Sealed Fuel, Tether	1	1654400, 1654403
3	804744	Fuel Gauge, Analogue 130MM	1	1654400
	804681	Sending Unit, Fuel Pump/Level, 60°	1	1654403
4	793575	Tank Vent Fitting	1	1654400, 1654403
5	805657	Guard, Muffler	1	1654400, 1654403
6	803569	Clamp, Hose, Spring Action 7/16"	4	1654400, 1654403
7A	803568	Hose, Fuel Line 3/16"	1.42 FT	1654400, 1654403
7B	803568	Hose, Fuel Line 3/16"	1.5 FT	1654400, 1654403
8	793645	Clip, Hose/Wire	5	1654400, 1654403
9	804885	Valve, Fuel Shutoff Remote mount, 3/16"	1	1654400, 1654403
10	30746	Hose, Clamp 3/8"(CS)	2	1654400, 1654403
11	785768	Hose Mender.3/8x1/4, Nylon	1	1654400, 1654403
12	801490	Hose, 1/4" Fuel Line	4.92 FT	1654400
	801490	Hose, 1/4" Fuel Line	5.08 FT	1654403
13	777834	Clamp, 1/4" Hose	2	1654400, 1654403
14	801491	Hose, 3/8" Fuel line	.67 FT	1654400, 1654403
15	805894	Roll Cage Weldment Assembly	1	1654400
	805895	Roll Cage Weldment Assembly	1	1654403
16	32844	Bracket, Lower ISO Bracket	4	1654400, 1654403
17	30825	Mount; 1.0" ISO CR50 - PW	4	1654400, 1654403
18	804492	Upper ISO Bracket, Generator Head	4	1654400, 1654403
19	804234	Weldment, Bumper	1	1654400, 1654403
20	805339	Engine Panel	1	1654400, 1654403
21	805341	Upper Muffler Panel	1	1654400, 1654403
22	805340	Generator Head Panel	1	1654400, 1654403
23	805352	Battery Bracket	1	1654403
24	804847	Battery Rubber Strap	1	1654403
25	785291	Positive Battery Cable	1	1654403
26	785292	Negative Battery Cable	1	1654403
27	806214	Control Panel Assembly	1	1654400
	806215		1	1654403
28	805292	Bottom Panel	1	1654400, 1654403
29	805364	Battery panel	1	1654400, 1654403
30	804387	Choke Cable	1	1654400, 1654403

Generator Exploded View Rev – G
Item #s 1654400, 1654403

31	806482	CO Module	1	1654400, 1654403
32	804887	Battery Charger	1	1654403
33	802314	Spark Arrestor	1	1654400, 1654403
34	805422	Choke cable bracket	1	1654400, 1654403
35	804329	Muffler Canister	1	1654400, 1654403
36	804357	Muffler mount bracket	1	1654400, 1654403
37	804344	Muffler Header GX270	1	1654400
	804348	Muffler Header, GX390	1	1654403
38	794606	Generator Head Assembly	1	1654400
	803774		1	1654403
39	794462	Engine, Honda GX270	1	1654400
	784821	Engine, Honda GX390	1	1654403
40	804922	Cover, Fuel Pump Plastic	1	1654400, 1654403
41	787259	Grommet,1/2”, Bumper	6	1654400, 1654403
42	804263	Plate, Handle Bracket, Left	1	1654400, 1654403
43	804209	Plate, Handle Bracket, right	1	1654400, 1654403
44	804192	Handle, Single	1	1654400, 1654403
45	804271	Handle Fastener Kit	1	1654400, 1654403
46	806351	Bracket, Foot	2	1654400, 1654403
47	2215	Rubber Bumper	2	1654400, 1654403
48	804852	Tire 10" Welded, 3/4", Flat Free	2	1654400, 1654403
49	305200	Retainer Wheel	2	1654400, 1654403
50	804158	Bracket, Axle	2	1654400, 1654403
51	785398	Axle	1	1654400, 1654403
52	805311	Choke Cable Clamp	1	1654400, 1654403
53	82131	Screw, M5-0.8X8MM PPHM	4	1654403
54	82011	Bolt, 1/4-20 X 1 ¼ HHSF GR5Z	4	1654400, 1654403
55	82085	Washer, 1/4 USS Flat Washer Z	5	1654400, 1654403
56	82013	Nut, 1/4-20 SER. FLG Z	5	1654400, 1654403
57	82009	Bolt, 1/4-20 X 3/4 HHSF GR5Z	3	1654400, 1654403
58	82621	Bolt, 5/16 X .75 HHFB	53	1654400, 1654403
-	-	Deleted	-	-
60	82094	Bolt, 5/16-18 x 1.75" HHFB	5	1654400, 1654403
61	82630	5/16 Flange Nylon Nut	11	1654400, 1654403
62	82222	Nut, 1/4-20 Nylon Insert LK-TE	2	1654400, 1654403
63	82405	Bolt, 3/8-16 x 1.25" HHCS W/patch	4	1654400, 1654403
64	82049	Washer, M10 Rib	4	1654400, 1654403

Generator Exploded View Rev – G
Item #s 1654400, 1654403

65	82301	Washer, 5/16" External Star	1	1654400, 1654403
66	82068	Washer, NO.10 FLAT Z	2	1654403
67	82006	Screw, 10-32 X 1/2 SHCS Y/Z	-	1654400
			2	1654403
68	82067	Nut, 10-32 CLIP NUT Z	1	1654400
			3	1654403
69	82007	Screw, 10-32 X 3/4 SHCS Y/Z	1	1654400
			3	1654403
70	82008	Nut, 10-32 KEPNUT, ZN	2	1654403
71	82461	Screw, 10-32 X 1-1/4 SHCS Y/Z	2	1654400, 1654403
72	82047	Washer, M8 RIB	2	1654400, 1654403
73	804596	1/4 - Turn Lock	2	1654400, 1654403
74	82019	Nut, 5/16" SER Flag	12	1654400, 1654403
75	82161	Screw, #8 X 1/2 HH G/Z	2	1654400, 1654403
-	-	Deleted	-	-
77	805701	Heat shield Assembly	1	1654400, 1654403
78	803900	Battery, 18Ah	1	1654403
79	805363	Cable clip - choke	2	1654400, 1654403
80	804602	Grommet	11	1654400, 1654403
81	804330	Gasket, Header	1	1654400, 1654403
82	801058	Decal, Made in USA	1	1654400, 1654403
83	805429	Decal, Operating Instructions	1	1654400, 1654403
84	805641	Decal, Choke and Fuel	1	1654400, 1654403
85	792433	Grommet, 1" opening	2	1654400, 1654403
86	306459	Wire, Engine ground	1	1654400, 1654403
87	805726	Braided sleeving	0.67 FT	1654403
88	784959	Fuel Valve 3/16"	1	1654400, 1654403
89	82021	WASHER, 5/16 USS FLAT Z	1	1654400, 1654403

Generator Exploded View Rev – G

Item #s 1654404, 1654406

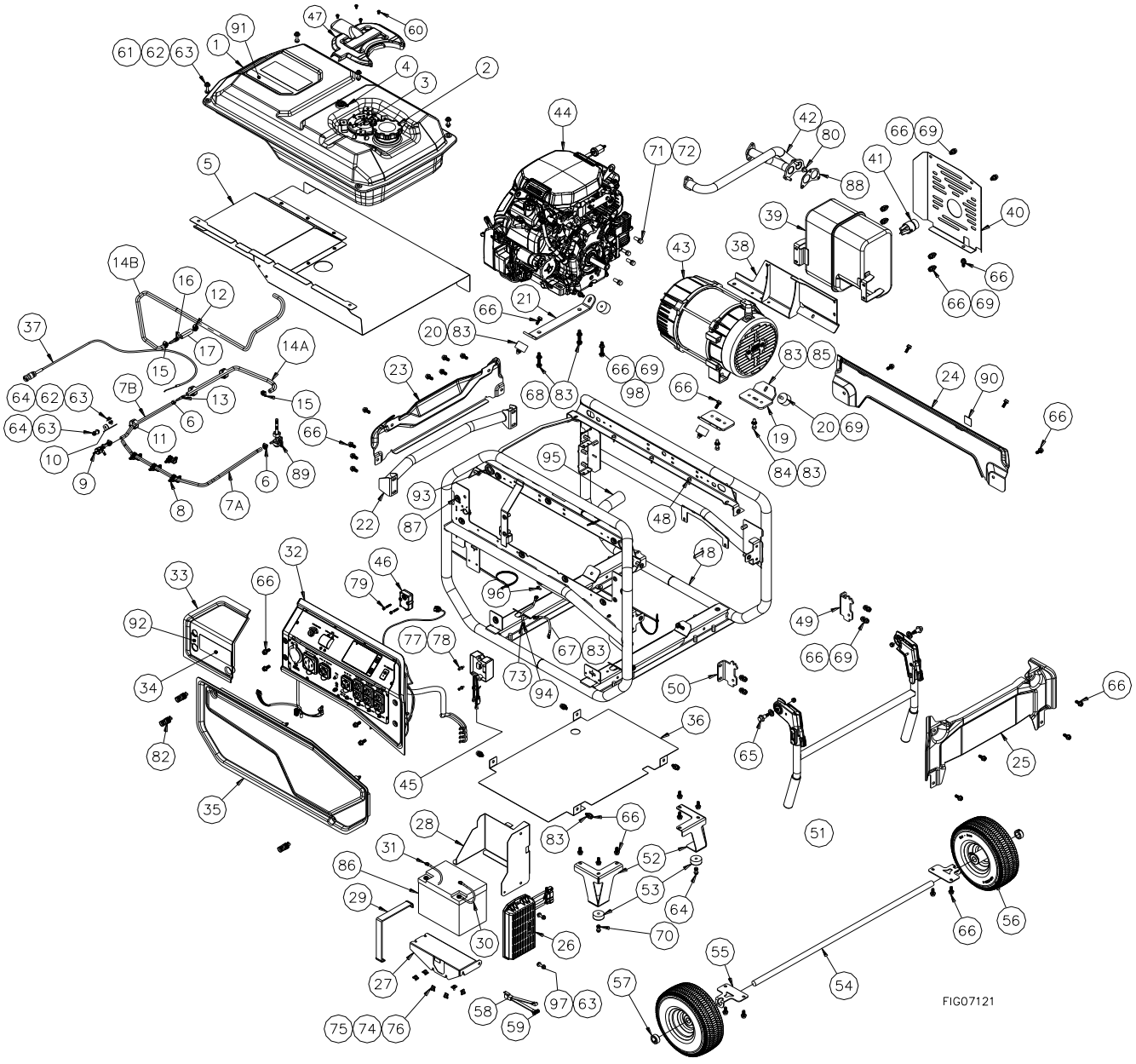

Generator Exploded View Rev – G

Item #s 1654404, 1654406

Ref #	Part #	Description	Qty	Used On
1	805880	Fuel Tank Assembly, 12 gal.	1	1654404, 1654406
2	804679	Cap, Sealed Fuel, Tether	1	1654404, 1654406
3	804681	Sending Unit, Fuel Pump/Level, 60ø	1	1654404, 1654406
4	793575	Tank Vent Fitting	1	1654404, 1654406
5	805707	Heat shield Assembly	1	1654404, 1654406
6	803569	Clamp, Hose, Spring Action 7/16"	4	1654404, 1654406
7A	803568	Hose, Fuel Line 3/16"	2.08 FT	1654404, 1654406
7B	803568	Hose, Fuel Line 3/16"	0.83 FT	1654404, 1654406
8	793645	Clip, Hose/Wire	5	1654404, 1654406
9	804885	Valve, Fuel Shutoff Remote Mount - 3/16	1	1654404, 1654406
10	805040	Bracket, Fuel Valve	1	1654404, 1654406
11	805390	Clip, Hose/Wire, Edge	3	1654404, 1654406
12	30746	Hose, Clamp 3/8"(CS)	2	1654404, 1654406
13	785767	Hose Mender, 1/4 x 3/16 Nylon	1	1654404, 1654406
14A	801490	Hose, 1/4" Fuel Line	1.08 FT	1654404, 1654406
14B	801490	Hose, 1/4" Fuel Line	3.63 FT	1654404, 1654406
15	777834	Clamp, 1/4" Hose	4	1654404, 1654406
16	785768	Hose Mender.3/8x1/4, Nylon	1	1654404, 1654406
17	801491	Hose, 3/8" Fuel line	.25 FT	1654404, 1654406
18	805893	Roll Cage Weldment Assembly	1	1654404, 1654406
19	804500	Bracket, Gen. Head	2	1654404, 1654406
20	30825	Mount; 1.0" ISO CR50	4	1654404, 1654406
21	804499	ISO Base Bracket Upper	1	1654404, 1654406
22	804225	Weldment, Bumper	1	1654404, 1654406
23	805342	Engine Panel	1	1654404, 1654406
24	805344	Upper Muffler Panel	1	1654404, 1654406
25	805343	Gen. Head Panel	1	1654404, 1654406
26	795995	AVR, 230 Gen Heads	1	1654404, 1654406
27	804789	Mount, Battery AVR	1	1654404, 1654406
28	805351	Battery Bracket, Upper	1	1654404, 1654406
29	804848	Battery Rubber Strap	1	1654404, 1654406
30	777164	Positive Battery Cable	1	1654404, 1654406
31	777108	Negative Battery Cable	1	1654404, 1654406
32	806217	Control Panel Assembly	1	1654404
	806219		1	1654406
33	804957	Service Panel	1	1654404, 1654406
34	805368	Decal, NorthStar 13000w	1	1654404
	805370	Decal, NorthStar 15000w	1	1654406

Generator Exploded View Rev – G
Item #s 1654404, 1654406

35	805365	Battery Panel	1	1654404, 1654406
36	805289	Bottom Panel	1	1654404, 1654406
37	805286	Cable Choke	1	1654404, 1654406
38	804361	Muffler Mount	1	1654404, 1654406
39	804335	Muffler Canister Weldment	1	1654404, 1654406
40	805656	Muffler Guard	1	1654404, 1654406
41	802314	Spark Arrestor	1	1654404, 1654406
42	804350	Gasket, Header GX630/GX690	1	1654404, 1654406
43	794609	Generator Head Assembly	1	1654404
	794891		1	1654406
44	783226	Engine - Honda GX630	1	1654404
	785264	Engine - Honda GX690	1	1654406
45	804887	Battery Charger	1	1654404, 1654406
46	806484	CO Module	1	1654404, 1654406
47	804922	Cover, Fuel Pump Plastic	1	1654404, 1654406
48	787259	Grommet,1/2, Bumper	6	1654404, 1654406
49	804263	Plate, Handle Bracket, Left	1	1654404, 1654406
50	804209	Plate, Handle Bracket, Right	1	1654404, 1654406
51	804161	Handle	1	1654404, 1654406
52	806351	Bracket, Foot	2	1654404, 1654406
53	2215	Rubber Bumper	2	1654404, 1654406
54	804160	Axle	1	1654404, 1654406
55	804158	Plate, Axle	2	1654404, 1654406
56	804852	Tire 10" Welded, 3/4", Flat Free	2	1654404, 1654406
57	305200	Retainer Wheel	2	1654404, 1654406
58	799297	Excitation Wire Assy	1	1654404, 1654406
59	30501	Conduit, 1/4" Nylon W/Slit - PW, CS	2.42 FT	1654404, 1654406
60	82131	Screw, M5-0.8X8MM PPHM	4	1654404, 1654406
61	82011	Bolt, 1/4-20 X 1 ¼ HHSF GR5Z	4	1654404, 1654406
62	82085	Washer, 1/4 USS Flat Washer Z	7	1654404, 1654406
63	82013	Nut, 1/4-20 SER. FLG Z	10	1654404, 1654406
64	82009	Bolt, 1/4-20 X 3/4 HHSF GR5Z	4	1654404, 1654406
65	804271	Handle Fastener Kit	1	1654404, 1654406
66	82621	Bolt, 5/16 X .75 HHFB	49	1654404, 1654406
-	-	Deleted	-	-
68	82018	Bolt, 5/16-18 x 2" HHFB	3	1654404, 1654406
69	82630	5/16 Flange Nylon Nut	11	1654404, 1654406
70	82222	Nut, 1/4-20 Nylon Insert LK-TE	2	1654404, 1654406
71	777362	Bolt, HHCS, 3/8-16 X 1 GR5Z W/Patch	4	1654404, 1654406

Generator Exploded View Rev – G
Item #s 1654404, 1654406

72	82049	Washer, M10 Rib	4	1654404, 1654406
73	82301	Washer, 5/16" External Star	1	1654404, 1654406
74	82068	Washer, NO.10 FLAT Z	6	1654404, 1654406
75	82006	Screw, 10-32 X 1/2 SHCS Y/Z	6	1654404, 1654406
76	82067	Nut, 10-32 CLIP NUT Z	6	1654404, 1654406
77	82007	Screw, 10-32 X 3/4 SHCS Y/Z	2	1654404, 1654406
78	82008	Nut, 10-32 KEPNUT, ZN	2	1654404, 1654406
79	82461	Screw, 10-32 X 1-1/4 SHCS Y/Z	2	1654404, 1654406
80	82047	Washer, M8 RIB	3	1654404, 1654406
81	82044	Screw, M8-1.25 X 16 HHCS GR8.8Z	1	1654404, 1654406
82	804596	1/4 - Turn Lock	3	1654404, 1654406
83	82019	Nut, 5/16" SER Flag	12	1654404, 1654406
84	82226	Bolt, HHCS, 5/16-18 x 1.25"	2	1654404, 1654406
-	-	Deleted	-	-
86	803901	Battery 35Ah	1	1654404, 1654406
87	804602	Grommet	12	1654404, 1654406
88	804336	Gasket, Header	1	1654404, 1654406
89	784959	Fuel Valve 3/16	1	1654404, 1654406
90	801058	Decal, Made in USA	1	1654404, 1654406
91	805429	Decal, Operating Instructions	1	1654404, 1654406
92	805641	Decal, Choke and Fuel	1	1654404, 1654406
93	792433	Grommet, 1" opening	2	1654404, 1654406
94	306459	Wire, Engine ground	1	1654404, 1654406
95	805726	Braided sleeving	0.67 FT	1654404, 1654406
96	796495	Wire Splitter	1	1654404, 1654406
97	82010	BOLT,1/4-20 X 1 HHSF GR5Z	2	1654404, 1654406
98	82021	WASHER, 5/16 USS FLAT Z	1	1654404, 1654406

Control Panel Parts List

Item # 1654400

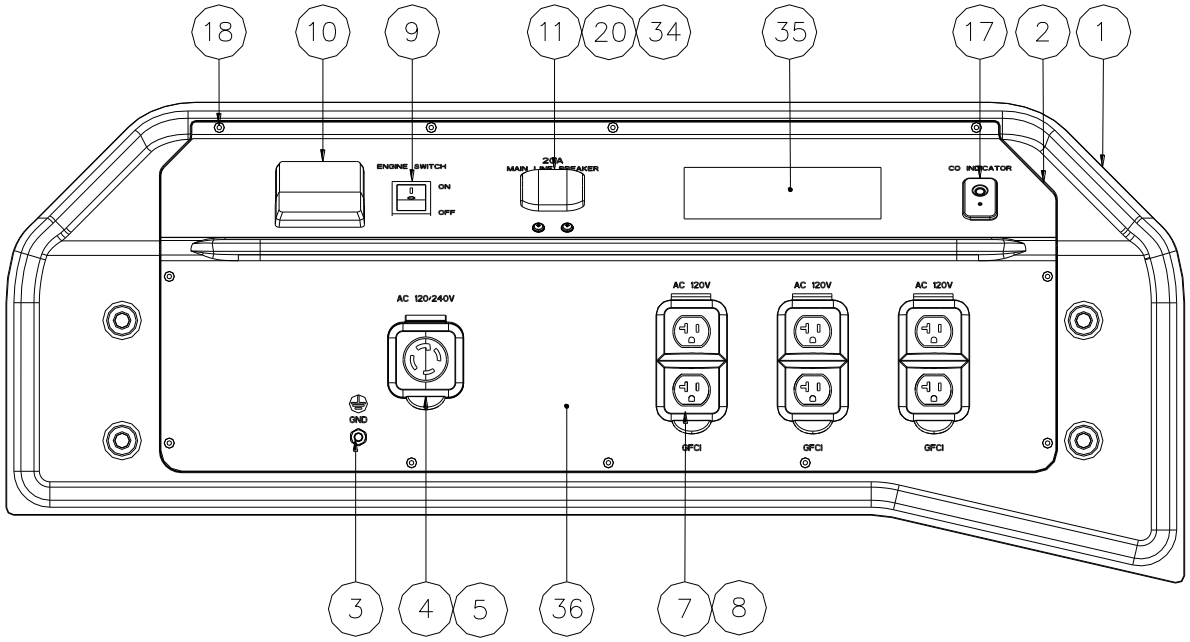

Item # 1654403

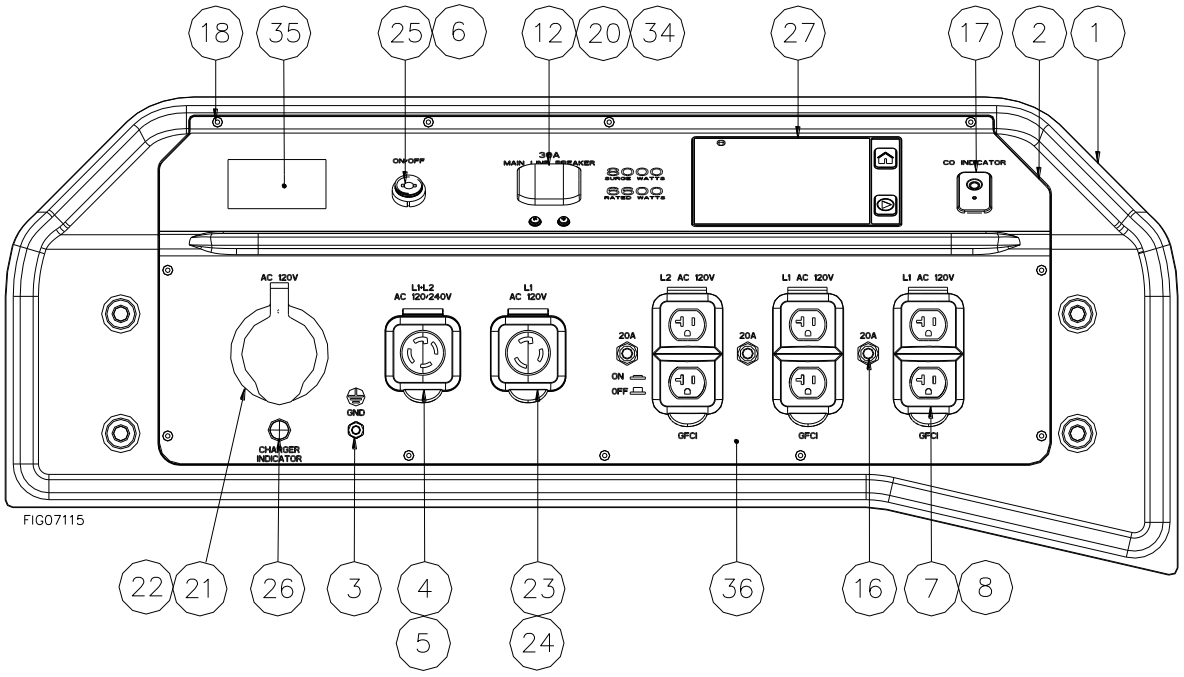

Control Panel Parts List

Item #
1654404

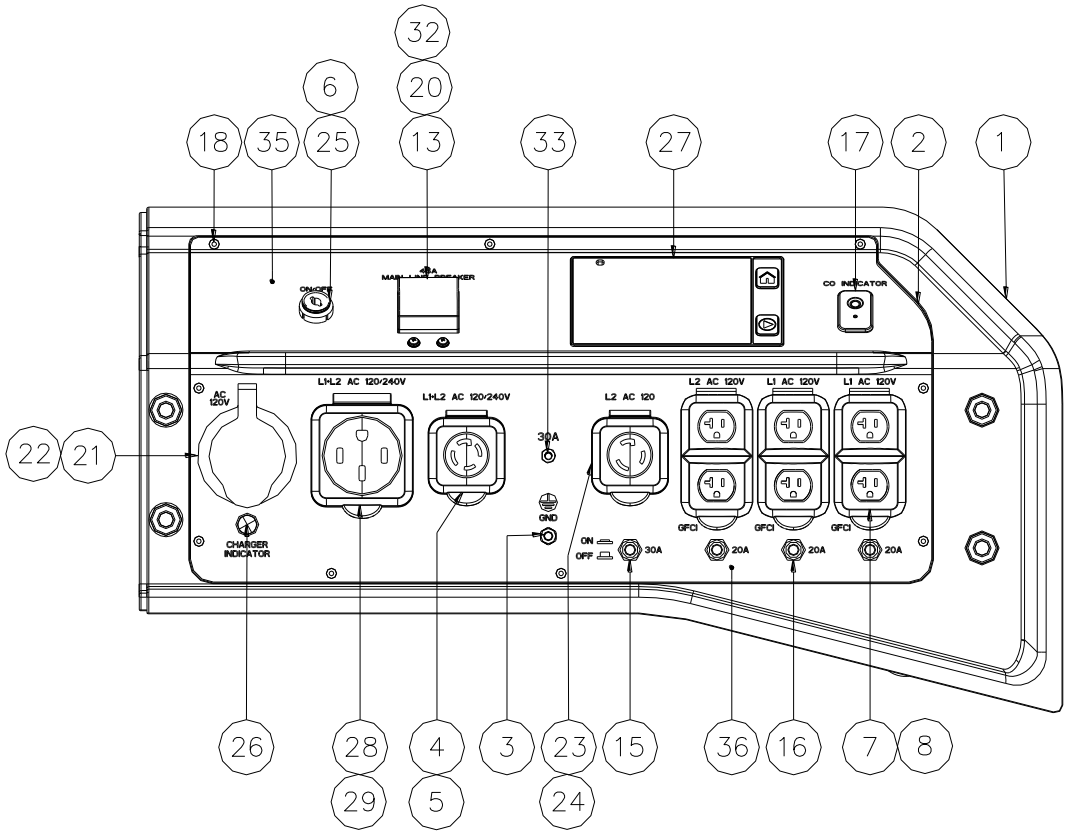

Item #
1654406

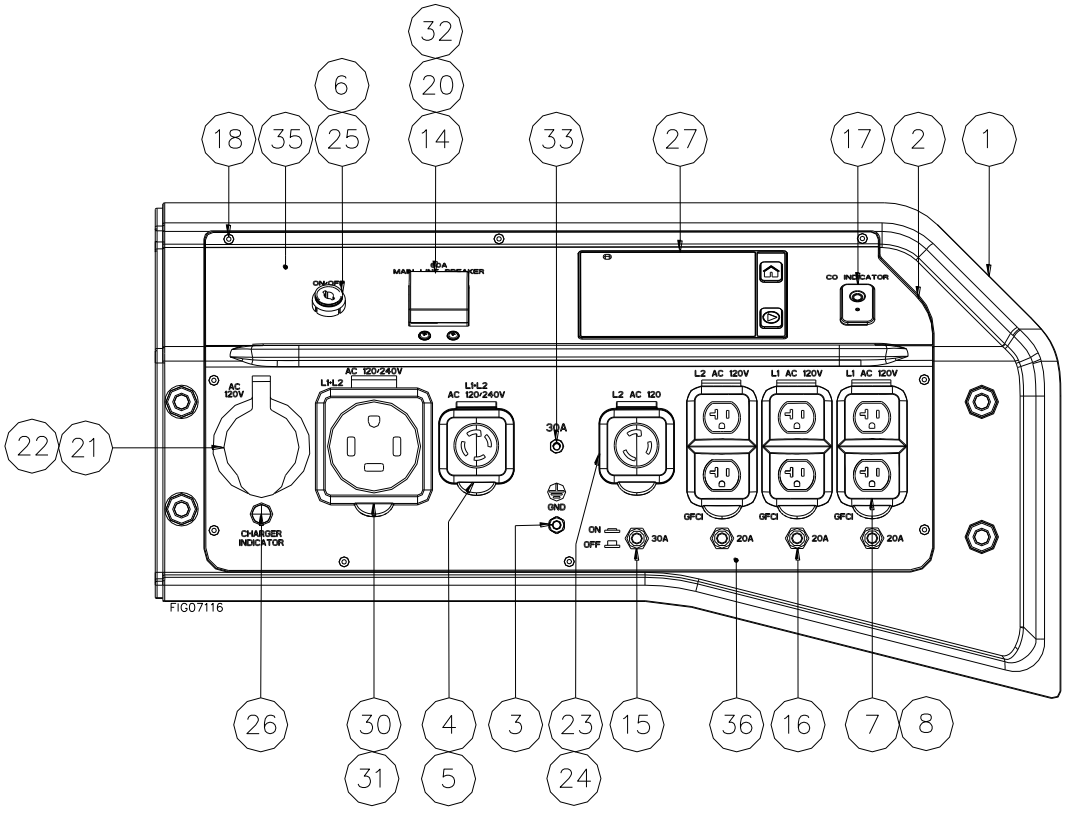

Control Panel Parts List

Ref #	Part #	Description	Qty	Used on
1	805979	Control Panel Enclosure	1	1654400, 1654403
	805977	Control Panel Enclosure	1	1654404, 1654406
2	806002	Plate, Control Panel, with Decals	1	1654400
	806004	Plate, Control Panel, with Decals	1	1654403
	806005	Plate, Control Panel, with Decals	1	1654404
	806007	Plate, Control Panel, with Decals	1	1654406
3	802635	Grounding Post	1	All
4	805112	Receptacle L14-30	1	All
5	802618	Cover, Receptacle L14-30	1	All
6	800046	Engine Start Key	1	All
7	802231	Receptacle,5-20R GFCI	3	All
8	802651	Cover, Receptacle 5-20R GFCI	3	All
9	790409	Rocker Switch	1	1654400
10	783058	Voltmeter	1	1654400
11	805114	Breaker, Circuit 2P-20A	1	1654400
12	805115	Breaker, Circuit 2P-30A	1	1654403
13	805116	Breaker, Circuit 2P-45A	1	1654404
14	804927	Breaker, Circuit 2P-60A	1	1654406
15	783091	Circuit Breaker, 30A	1	1654404, 1654406
16	783061	Circuit Breaker, 20A	3	1654403, 1654404, 1654406
17	804892	LED Indicator, CO Sensor	1	All
18	802653	Screw, Self-Tapping, M3.5X12	11	1654400, 1654403
			9	1654404, 1654406
19	783065	Wire Guide, large (Not Shown)	2	All
20	805054	Screw, PHP, M3X0.5 6MM LG	4	All
21	805960	Receptacle, NEMA 5-15P	1	1654403, 1654404, 1654406
22		Cover, Socket 5-15P		
23	805113	Receptacle L5-30	1	1654403, 1654404, 1654406
24	805147	Cover, Receptacle L5-30	1	1654403, 1654404, 1654406
25	802649	Key Switch, Engine	1	1654403, 1654404, 1654406
26	805154	Charger Indicator LED	1	1654403
	805210			1654404
	805224			1654406
27	804899	GEN, Digital Display	1	1654403, 1654404, 1654406
28	802619	Receptacle,14-50R	1	1654404
29	802620	Cover, Receptacle 14-50R	1	1654404
30	802644	Receptacle,14-60R	1	1654406
31	802641	Cover, Receptacle 14-60R	1	1654406
32	805310	45A - 60A - 2P Breaker Cover	1	1654404, 1654406
33	805336	30A - 2P Thermal Breaker	1	1654404, 1654406
34	805309	20A - 30A - 2P Breaker Cover	1	1654400, 1654403

1654400 Wiring Schematic

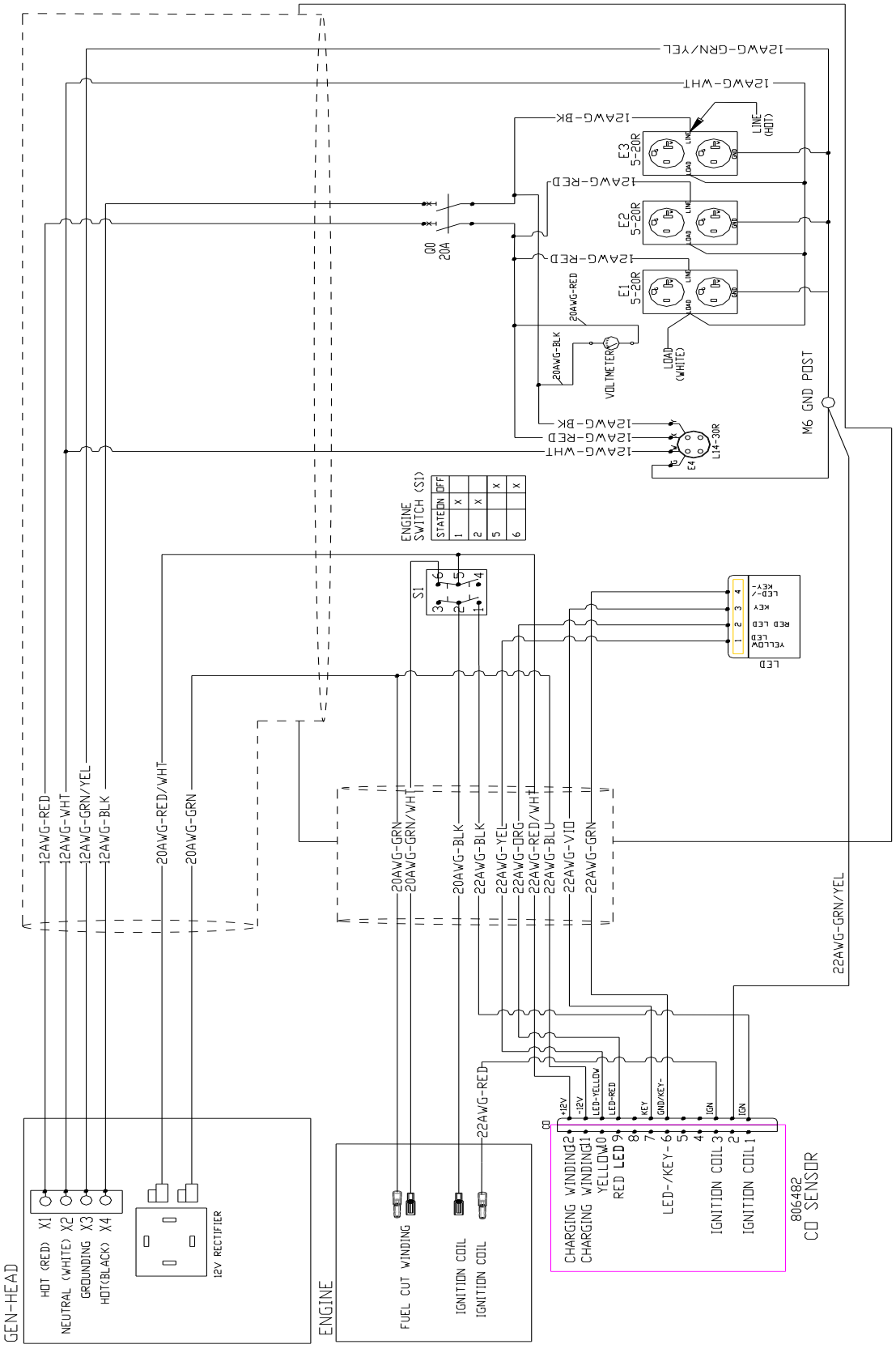

1654403 Wiring Schematic

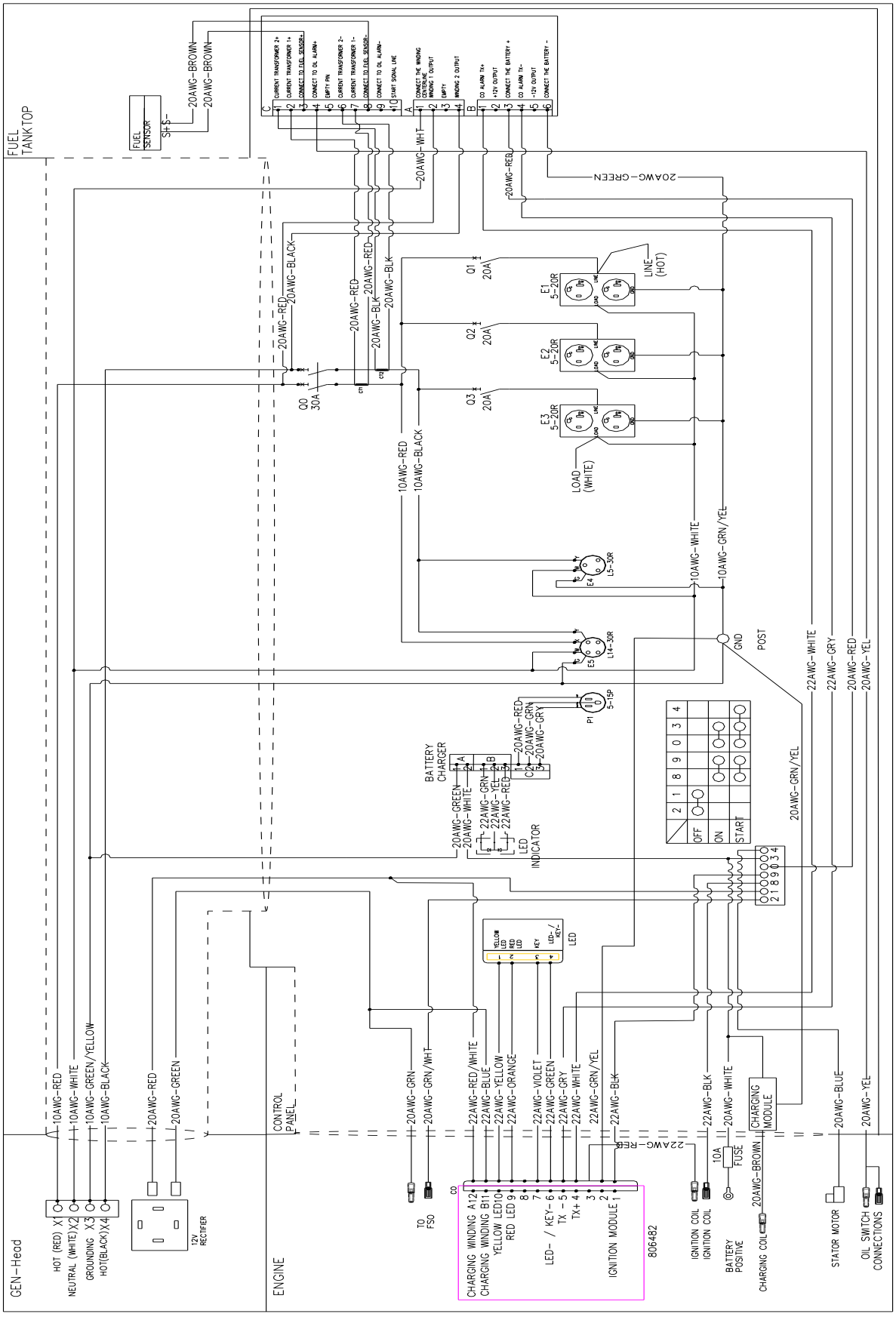

1654404 Wiring Schematic

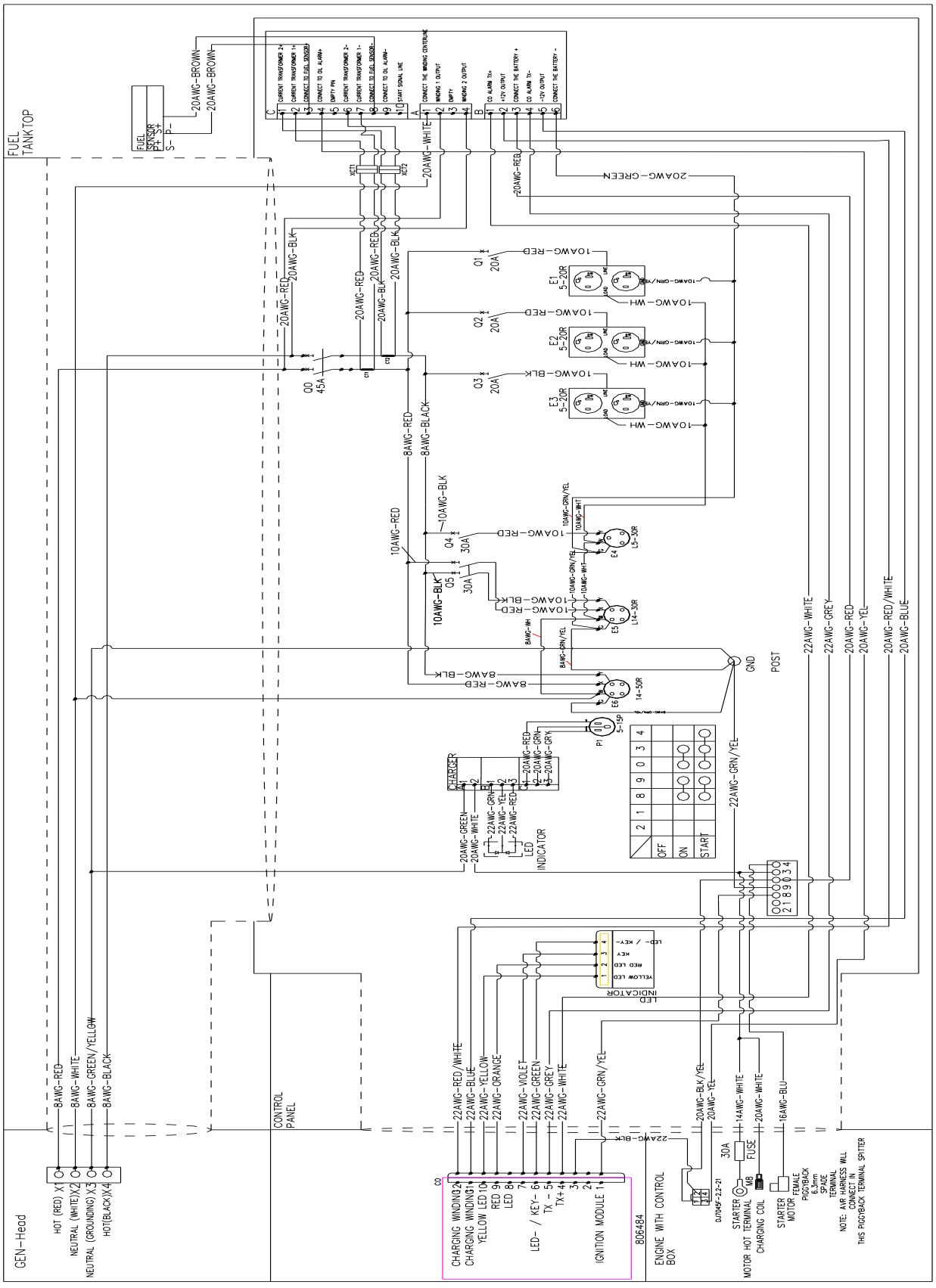

1654406 Wiring Schematic

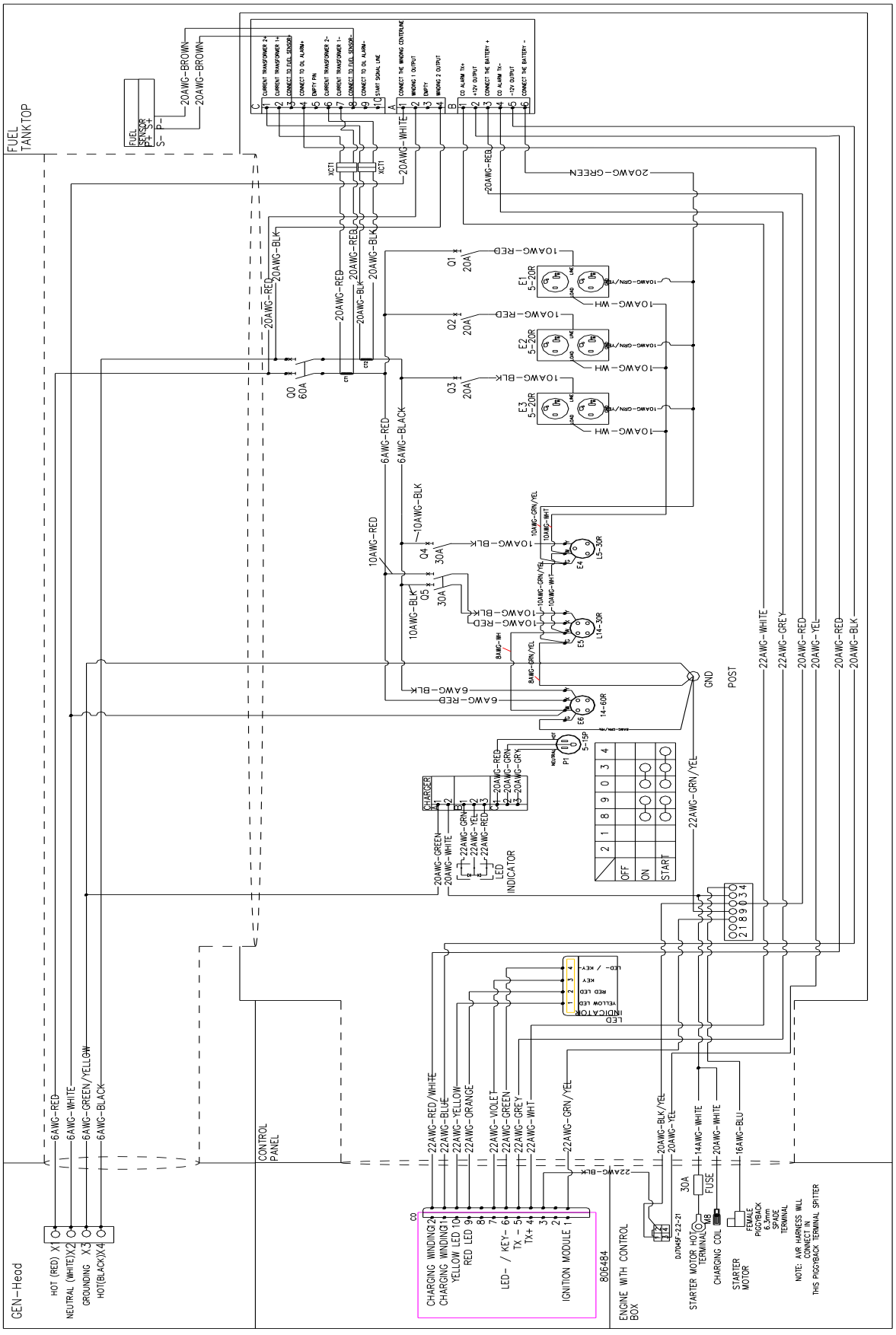

Generator Head Exploded Views

Item #s 1654400

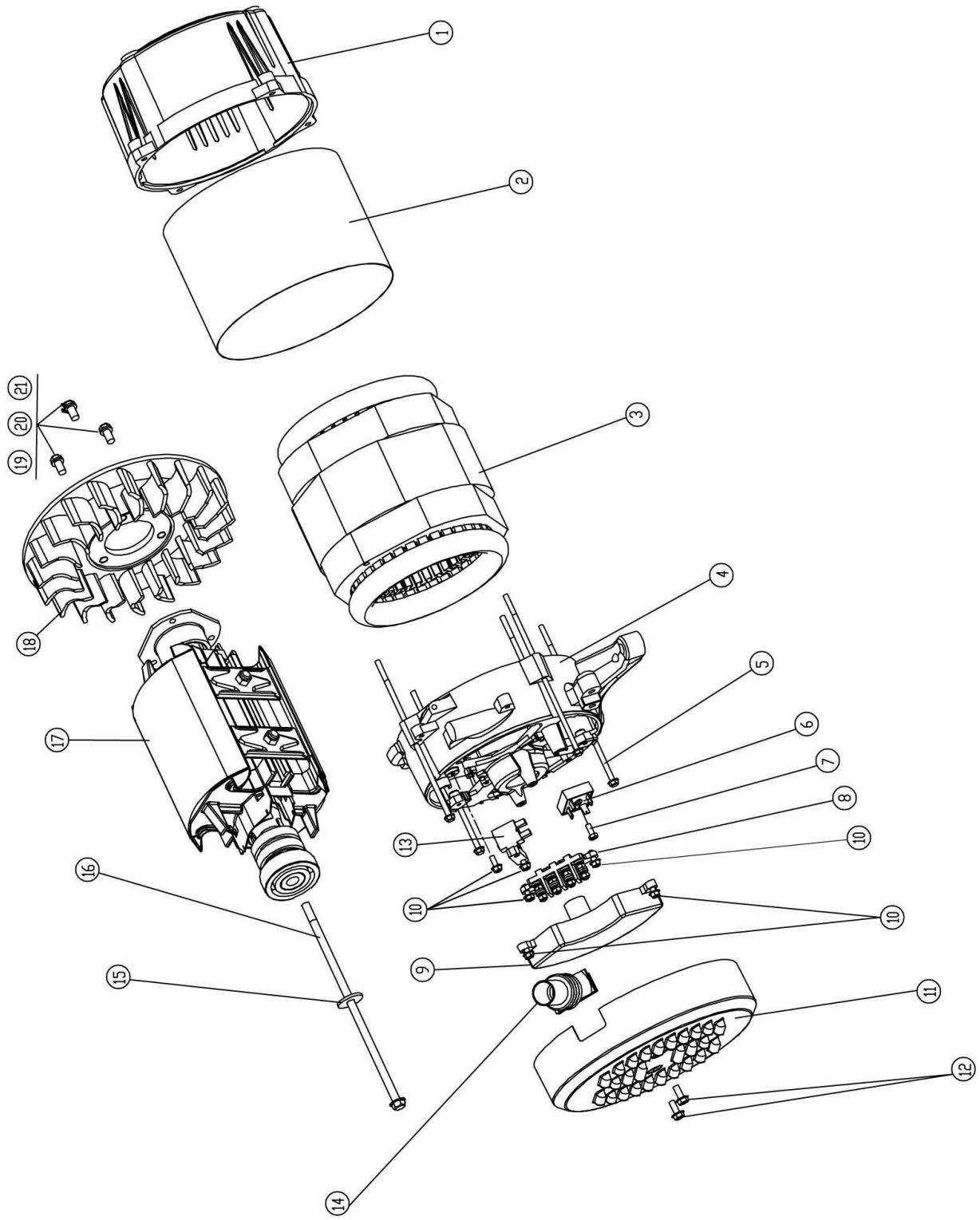

Generator Head Exploded Views
Item #s 1654400

Ref #	Part #	Description	Qty
1	796591	Engine Adapter	1
2	796580	Cover Band	1
3	796551	Stator Assembly	1
4	796586	Bearing Support	1
5	796567	Hexagon Flange Bolt M6 x 140	5
6	796576	Bridge Rectifier	1
7	796557	Outer Hexagon Bolt M5 x 20	1
8	796553	Terminal Block	1
9	795996	AVR	1
10	796564	Hexagon Flange Bolt M5 x 10	6
11	796583	End Cover	1
12	796563	Hexagon Flange Bolt M5 x 12	2
13	795999	Carbon Brush	1
14	796581	Rubber Boot	1
15	796573	Flat Washer	1
16	796558	Hexagon Flange Bolt 5/16-24 x 7.28"	1
17	796556	Rotor Assembly	1
18	796588	Fan	1
19	796594	Spring Washer	3
20	796574	Flat Washer	3
21	796593	Fan Bolts	3

Generator Head Exploded Views

Item #s 1654403

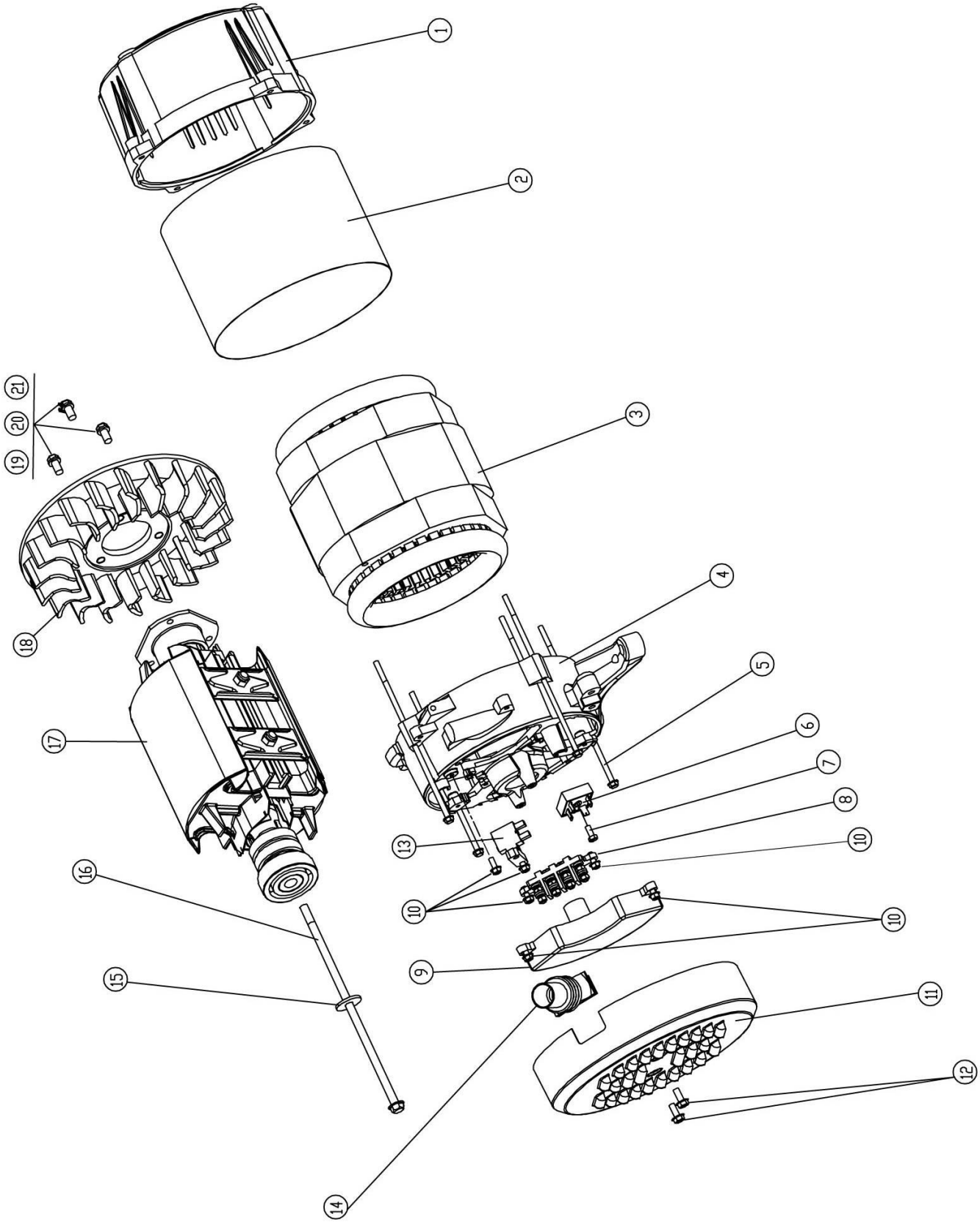

Generator Head Exploded Views

Item #s 1654403

Ref #	Part #	Description	Qty
1	796591	Engine Adapter	1
2	796578	Cover Band	1
3	796550	Stator Assembly	1
4	796586	Bearing Support	1
5	796568	Hexagon Flange Bolt M6 x 180	5
6	796576	Bridge Rectifier	1
7	796557	Outer Hexagon Bolt M5 x 20	1
8	796553	Terminal Block	1
9	795996	AVR	1
10	796564	Hexagon Flange Bolt M5 x 10	6
11	796583	End Cover	1
12	796563	Hexagon Flange Bolt M5 x 12	2
13	795999	Carbon Brush	1
14	796581	Rubber Boot	1
15	796573	Flat Washer	1
16	796559	Hexagon Flange Bolt 5/16-24 x 9.09"	1
17	796555	Rotor Assembly	1
18	796588	Fan	1
19	796594	Spring Washer	3
20	796574	Flat Washer	3
21	796593	Fan Bolts	3

Generator Head Exploded Views

Item #s 1654404, 1654406

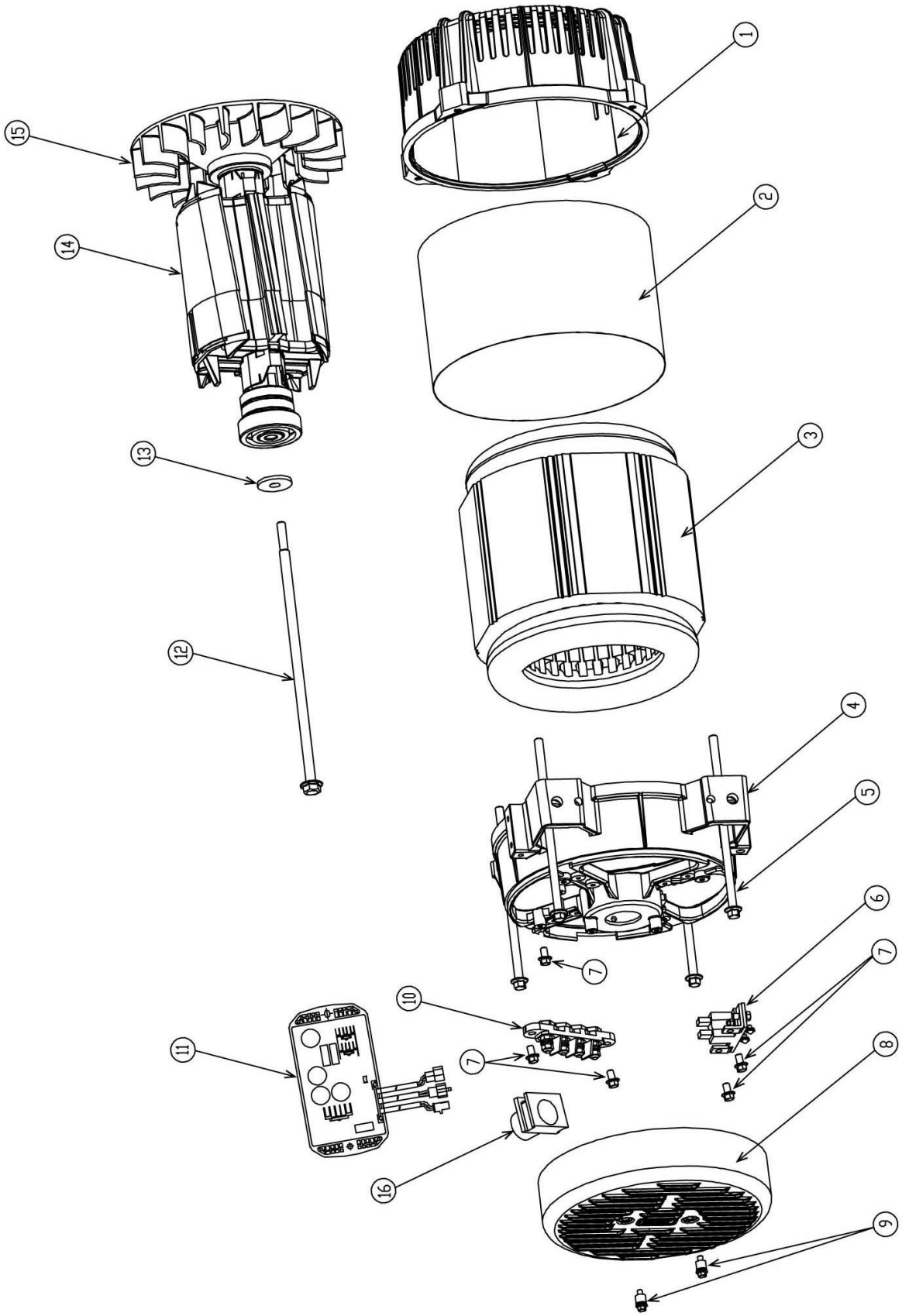

Generator Head Exploded Views
Item #s 1654404, 1654406

Ref #	Part #	Description	Qty	Used On
1	796592	Engine Adapter	1	1654404, 1654406
2	796916	Cover Band	1	1654404
	796917			1654406
3	796599	Stator Assembly	1	1654404
	796601			1654406
4	796587	Bearing Support	1	1654404, 1654406
5	796565	Hexagon Flange Bolt M8 x 185	4	1654404
	796571	Hexagon Flange Bolt M8 x 195		1654406
6	795998	Carbon Brush	1	1654404, 1654406
7	796564	Hexagon Flange Bolt M5 x 16	5	1654404, 1654406
8	796584	End Cover	1	1654404, 1654406
9	796563	Hexagon Flange Bolt M5 x 12	2	1654404, 1654406
10	796554	Terminal Block	1	1654404, 1654406
11	795995	AVR	1	1654404, 1654406
12	796561	Hexagon Flange Bolts 5/16-24 x 10.62”	1	1654404
	796562	Hexagon Flange Bolts 5/16-24 x 11.02”		1654406
13	796575	Flat Washer	1	1654404, 1654406
14	796600	Rotor Assembly	1	1654404
	796602			1654406
15	796589	Fan	1	1654404, 1654406
16	796582	Rubber Boot	1	1654404, 1654406

Limited Warranty

Dear Valued Customer:

The NorthStar Product you just purchased is built with the finest material and craftsmanship. Use this product properly and enjoy the benefits from its high performance. By purchasing a NorthStar product, you show a desire for quality and durability. Like all mechanical equipment this unit requires a due amount of care. Treat this unit like the high quality piece of machinery it is. Neglect and improper handling may impair its performance. Please thoroughly read the instructions and understand the operation before using your product. Always contact NorthStar Product Support at 1-800-270-0810 prior to having any service or warranty work performed, as some services performed by parties other than NorthStar approved service centers may void this warranty. This warranty is in lieu of any other warranty expressed or implied and NorthStar assumes no other responsibility or liability outside that expressed within this warranty.

Limited Warranty

NorthStar shall warranty any piece of equipment manufactured, or parts of equipment manufactured, to be free from defects in material or workmanship for a period of:

NorthStar Warranty		
Item #	**Consumer Warranty Period**	**Commercial Warranty Period**
1654400, 1654403, 1654404, 1654406	4 years from date of purchase by user	2 years from date of purchase by user

Engine Warranty		
Item #	**Consumer Warranty Period**	**Commercial Warranty Period**
1654400, 1654403, 1654404, 1654406	3 years from date of purchase by user	3 years from date of purchase by user

"Consumer use" means personal residential household and/or recreational use by a consumer. "Commercial use" means all other uses, including use for commercial, income producing, primary power, off grid power, or rental purposes or when purchased by a business.

This warranty applies to the original purchaser of the equipment (verification of purchase, in the form of a receipt, is the responsibility of the buyer), is non-transferable, and covers parts and labor. Parts will be replaced or repaired at no charge, except when the equipment has failed due to lack of proper maintenance. If a part is no longer available, the part may be replaced with a similar part of equal function. Any misuse, abuse, alteration or improper installation or operations will void warranty. Determining whether a part is to be replaced or repaired is the sole decision of NorthStar. NorthStar will not provide for replacement of complete products due to defective parts. Any costs incurred due to replacement or repair of items outside of a NorthStar approved facility is the responsibility of the buyer and not covered under warranty. Transportation costs to and from service center is the responsibility of the customer.

In addition to the normal warranty, NorthStar shall warrant any normal wear item from defects in material or workmanship for a period of 90 days from the date of purchase by user. Normal wear items include, but are not limited to, filter elements and electrical brushes.

This warranty specifically excludes the following; failure of parts due to damage caused by accident, fire, flood, windstorm, acts of God, applications not approved by NorthStar in writing, corrosion caused by chemicals, use of replacement parts which do not conform to manufacturer's specifications, damage to accessory parts such as starting batteries, damage related to rodent and/or insect infestation and damage caused by vandalism. Additional exclusions: loss of running time, inconvenience, loss of income, or loss of use, including any implied warranty of merchantability of fitness for a specific use. Also, Outdoor Power Equipment needs periodic parts and service to perform well, and this warranty does not cover instances when normal use has exhausted the life of a component or the engine.

This warranty does not cover any personal injury or damage to surrounding property caused by failure of any part. Repair or replacement of parts does not extend the warranty period.

The engine warranty is covered under the terms and conditions as outlined by the engine manufactures warranty contained herein and is the sole responsibility of the engine manufacture. Normal engine maintenance such as spark plugs, air filters, adjustments, fuel system cleaning and obstruction due to build up is not covered by this NorthStar warranty.

Please fill in the following information and have it on hand when you call in on a warranty claim.

Customer Number: _____

Date of Purchase: _____

NorthStar Serial Number: _____

Item Number: _____



Assembled by
Northern Tool & Equipment Company, Inc.
Burnsville, MN 55306
NorthernTool.com

PATENT PENDING