NORTH STAR
Proven Performance

ITEM NUMBER: 157595

SERIAL NUMBER: _____

Owner's Manual

Instructions for Set-up, Operation, Maintenance & Storage

TRAILER MOUNTED, HOT WATER PRESSURE WASHER 4000 PSI / 4 GPM

Portable Outdoor-Use Only

This pressure washer produces both cold and hot water high pressure spray. Cleaning chemicals may be incorporated into the spray if desired. The pressure pump for this equipment is powered by a gasoline internal combustion engine and the water is heated by a kerosene/fuel-oil fired, open flame burner.

⚠ WARNING – READ THIS MANUAL	
READ and UNDERSTAND this Owner's Manual and the Engine Owner's Manual completely before attempting to set up and use the pressure washer! Failure to properly set up, operate, and maintain this pressure washer could result in ***serious injury or death*** to operator or bystanders.	
⚠ WARNING – SPECIAL HAZARDS	
CO Poisoning	• Exhaust from both the engine and burner contains carbon monoxide, a poisonous gas that can cause carbon monoxide poisoning and possible death if inhaled. ONLY run pressure washer OUTDOORS and at least 20 feet from the home, away from windows, vents and air intakes, to allow proper ventilation. If you start to feel sick, dizzy, or weak while using the pressure washer, shut off the engine and get to fresh air RIGHT AWAY.
Skin/Eye Injury	• High-pressure spray can cause serious skin or eye injury, including injection injury if fluid pierces the skin. Injection injury can result in blood poisoning and/or severe tissue damage.
Burns	• Hot spray can scald and burn skin. • Hot surfaces of wand, engine and burner, as well as hot exhaust from both the engine and burner can cause burns.
Slips/Falls	• Spray discharge can cause puddles and slippery surfaces. • Spray-gun kickback can cause operator loss of balance and falls.
Flying Debris	• High-pressure spray can cause surface damage and flying debris.
Fire/ Explosion	• Engine and burner sparking can ignite fuel or other flammable liquids or vapors in the vicinity. • Hot exhaust from engine and burner can ignite combustible materials.
Chemical Exposure	• Cleaning chemical vapors or contact with skin may be hazardous.
Electric shock	• Spray contact with electrical sources can cause electric shock.
Trailer tip over	• Sudden stopping or turning while towing the pressure washer with a filled water tank can result in driving instability and/or trailer tip over.
A summary of important safety information is provided at the end of the manual.	

Any Questions, Comments, Problems, or Parts Orders

Call NorthStar Product Support 1-800-270-0810

Hazard Signal Word Definitions

	This is the safety alert symbol. It is used to alert you to potential personal injury hazards. Obey all safety messages that follow this symbol to avoid possible injury or death.
⚠DANGER	DANGER indicates an imminently hazardous situation which, if not avoided, will result in death or serious injury.
⚠WARNING	WARNING indicates a hazardous situation which, if not avoided, could result in death or serious injury.
⚠CAUTION	CAUTION, used with safety alert symbol, indicates a hazardous situation which, if not avoided, may result in minor or moderate injury.
CAUTION	CAUTION, without the safety alert symbol, is used to address practices not related to personal injury.

FIG03210

Equipment Protection Quick Facts		
Inspect Upon Delivery	**STOP!** Closely inspect to make sure no components are missing or damaged. See the "Assembly and Initial Set-Up" section for instructions on whom to contact to report missing or damaged parts.	
Fill with Engine Oil	**STOP!** Engine is shipped without oil. DO NOT start pressure washer without adding oil to engine. Please refer to Engine Manual shipped with unit for acceptable grade motor oils.	
Check Pump Oil	Pump is shipped with oil. Remove shipping tape and black vent plug (if present) from oil fill cap.	
Battery Required	A battery is not included. The engine will not run, and the burner will not fire unless a battery is installed. Purchase a standard 12VDC, 18 Ah automotive battery (Group 75/86).	
Water Flow Requirements	Make sure your supply water flow rate is 20% higher than the pressure washer's flow rate (see "Specifications" section for detail), and that your water is clean and particle free.	
Storage	Do not allow water to freeze in the pump, hose, coil, or spray gun(s).	
Chemical Spraying	Use only NorthStar brand or equivalent washer chemicals designed for high-pressure use. Use soap adjustment knob to regulate cleaning power.	
Maintenance Schedule	Engine:	• See Engine Owner's manual.
	Pump:	• Change oil after first 40 hours, then every 3 months or 500 hours.
	Burner fuel filter /water separator:	• Drain water as needed. • Change filter after every 500 hours of use.
	Coil:	• Descale coil annually or more frequently as conditions/performance require. • Inspect coil for soot build-up annually and desoot if needed.
	Electrodes:	• Inspect electrodes annually and clean/adjust as needed

Table of Contents

About Your Pressure Washer 4

Specifications 5

Component Identification 6

Safety Labeling 8

Special Equipment Safety Features 10

Assembly and Initial Set-Up 11
- Step 1. Unpacking & Delivery Inspection 11
- Step 2. Trailer Assembly 13
- Step 3. Initial Pump, Engine & High Pressure Hose Preparation 15
- Step 4. Battery Installation 16

Moving and Towing 17

Before Each Use 19
- Step 1. Check Equipment 19
- Step 2. Add Fuel(s) 20
- Step 3. Select a Suitable Worksite 22

Operation 24
- Step 1. Connect Hose(s), Water Supply, and Spray Nozzle(s) 24
- Step 2. Set Up for Chemical Spray (if desired) 28
- Step 3. Spraying 30
- Step 4. Stopping 36

Storage 37

Burner Adjustment 40

Maintenance and Repair 42

Troubleshooting 54

Parts Explosion 55

Pump Explosion 59

Wiring Diagram 60

Summary of Important Safety Information 61

Limited Warranty 67

California Proposition 65 Information 68

About Your Pressure Washer

Thank you for purchasing a NorthStar hot water pressure washer! Your machine is designed for long life, dependability, and the top performance you demand. This pressure washer is designed to:

1) Produce a high-pressure spray of heated or unheated water (up to 5 gallons per minute at 4000 psi).
2) Incorporate cleaning chemicals into a low-pressure water spray.

Water is supplied via the pressure washer's water tank or via standard tap water through a garden hose. In either case, the water supply must have a flow rate of at least 4.8 gallons per minute. If using tap water, the use of a backflow preventer on the water supply hose is recommended and may be required by local code. Any cleaning chemicals that are used must be specifically approved for use in pressure washers.

The pressure washer is trailer mounted and towable.

The pump is powered by a gasoline-fueled engine. The spray water is heated (when desired) by a kerosene/fuel-oil fired, spark-ignited, open flame burner. Normal operation of this equipment will require you to supply:

- Gasoline fuel and lubrication oil for the engine
- Pump oil
- Fuel for the burner (kerosene, diesel, or fuel oil)
- A 12-volt standard automotive battery

See the "**Specifications**" section of this manual for more detail.

Gasoline powered pressure washers are for OUTDOOR USE ONLY. Be sure to read about site selection for running this pressure washer in the "**Installation & Initial Set-up**" section of this manual.

The user should plan to acquire and wear safety apparel during operation of this pressure washer. Safety apparel includes waterproof insulated gloves, safety glasses with side and top protection, and non-slip protective footwear. Some cleaning chemicals may require the use of a respirator mask (as instructed on chemical label).

Before using this washer, the user shall determine the suitability of this product for its intended use and assumes liability therein.

Read this Manual

⚠ WARNING

Carefully read and follow all instructions and safety information for using this pressure washer. Improper use or maintenance of the pressure washer can result in ***serious injury or death*** to the operator or bystanders from:

- ***Carbon monoxide poisoning***
- ***Skin/eye injury from high pressure spray***
- ***Fire/explosion***
- ***Burns***
- ***Electric shock***
- ***Chemical exposure***
- ***Slips/falls***
- ***Flying objects/debris***

Keep this manual for reference and review. A summary of important safety information can be found at the end of the manual.

Proper preparation, operation, and maintenance of this pressure washer will result in optimal performance and a long life for this equipment. For detailed Engine operation and maintenance information, always refer to the Engine Owner's Manual furnished with the pressure washer.

ATTENTION:
Rental Companies and Private Owners who loan this equipment to others!

All persons to whom you rent/loan this pressure washer must have access to and read this manual. Keep this owner's manual with the pressure washer at all times and advise all persons who will operate the machine to read it. You must also provide personal instruction on how to safely set-up and operate the pressure washer and remain available to answer any questions a renter/borrower might have.

Specifications

MODEL	
Model #	157595
FLOW OUTPUT	
Pressure Rating	4000 psi
Flow Rate	4 gpm
Maximum Temperature	210° F
DIMENSIONS / COMPONENTS	
Length	129"
Width	76"
Height	60"
Weight	970 lbs. – dry 2500 lbs. – water tank full
Pump Type	CAT 66DX
Engine Displacement	630cc
High Pressure Discharge Hose	3/8" x 150'
Chemical Injector	Maximum dilution ratio 13-to-1
Trailer GVWR	3500 lbs.
Hitch Ball Size	2"
SUPPLIES REQUIRED (not included)	
Engine Fuel	Regular, Unleaded Gasoline
Engine Oil	See Engine Owner's Manual
Burner Fuel	#1 or #2 Diesel, B5 or lower Biodiesel, Kerosene, or Fuel Oil (Capacity: 4 Gal.)
Pump Oil (shipped with oil, but refills required)	SAE 30 non-detergent oil 18 oz. capacity
Battery	12 Volt, minimum 18 Amp/Hr. Automotive Battery (Group 75/86)
Input Water Supply	Tap: Standard tap water @ 20-75 psi
	Water feed tank (included): Flow rate must be maintained at 4.8 gpm
Input Water Supply Hose	For Tap: Standard garden hose with inside diameter at least 5/8" (at least 3/4" diameter if hose longer than 100 ft.)
	For Tank: Hose and fittings included with tank.

Component Identification

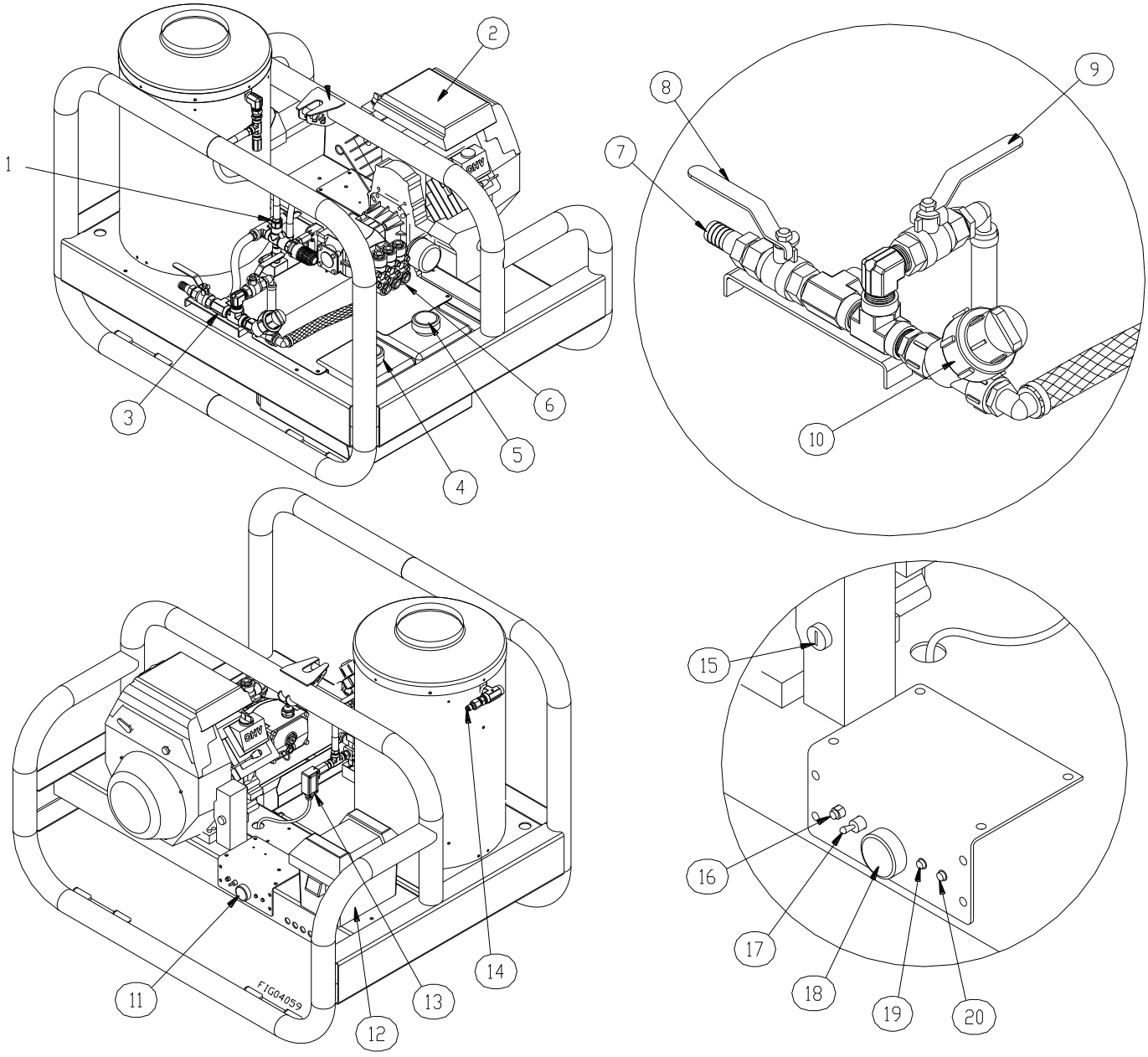

Ref #	Description	Ref #	Description	Ref #	Description
1	Unloader	8	Ball Valve (feed tank)	15	Engine Key Switch
2	Engine (see engine manual)	9	Ball Valve (city tap water)	16	Circuit Breaker
3	Inlet Plumbing	10	Water Filter	17	Heat Switch
4	Diesel Tank	11	Control Panel	18	Thermostat
5	Gasoline Tank	12	Battery Box (battery not included)	19	Indicator Light (pressure sw.)
6	Pump	13	Pressure Switch	20	Indicator Light (thermostat)
7	Water Inlet (feed tank)	14	Water Outlet (high pressure)		

Component Identification

REFERENCE GUIDE	
1. Unloader	Valve that regulates pressure and directs flow into bypass when trigger is closed.
2. Engine	The air-cooled engine powers the pump.
3. Inlet Plumbing	Means of connecting garden hose to pump inlet.
4. Diesel Tank	Diesel fuel storage container.
5. Gasoline Tank	Gasoline fuel storage container.
6. Pump	A device that moves fluid through a combination of suction and displacement.
7. Water Inlet (feed tank)	Used to connect water from the feed tank to the inlet plumbing.
8. Ball Valve (feed tank)	Used to open or close the water line from feed tank.
9. Ball Valve (city tap water)	Used to open or close the water line from city tap.
10. Water Filter	Filters water prior to entering the pump.
11. Control Panel	Flat surface for mounting switches.
12. Battery Box	Storage place to house the battery.
13. Pressure Switch	Controls burner.
14. Water Outlet	Connect high pressure hose here.
15. Engine Key Switch	Start engine by turning clockwise.
16. Circuit Breaker	Push to reset circuit breaker to protect against electrical overloads.
17. Heat Switch	On/off device for power to burner components.
18. Thermostat	Adjust the water temperature.
19. Indicator Light (pressure switch)	Instrument used to monitor unit operation. Should be illuminated when the gun is in use.
20. Indicator Light (thermostat)	Instrument used to monitor unit operation. Should be illuminated when the gun is in use and the burner is firing.

Safety Labeling

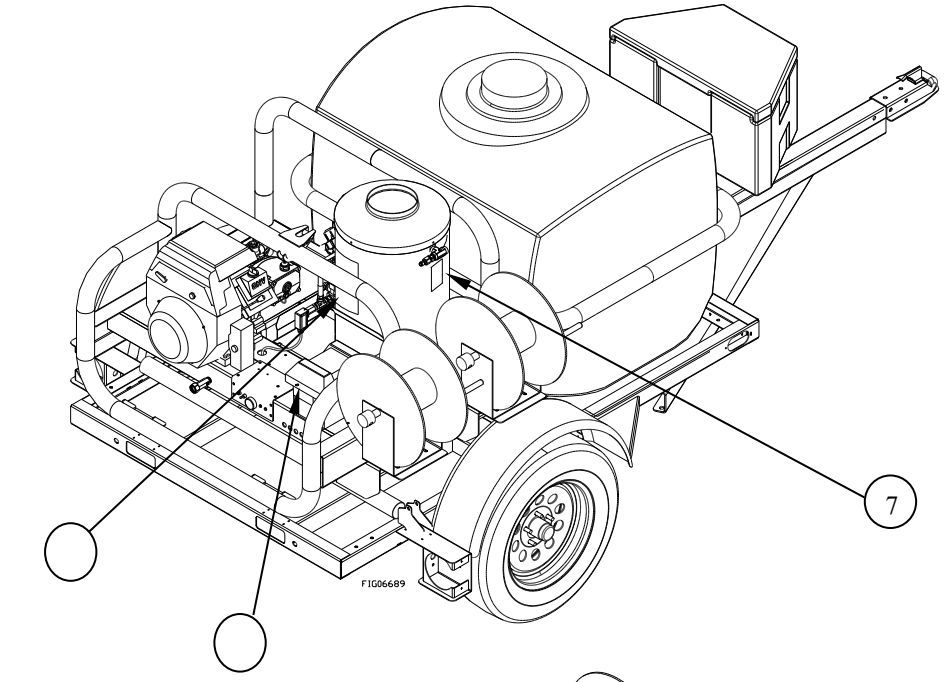

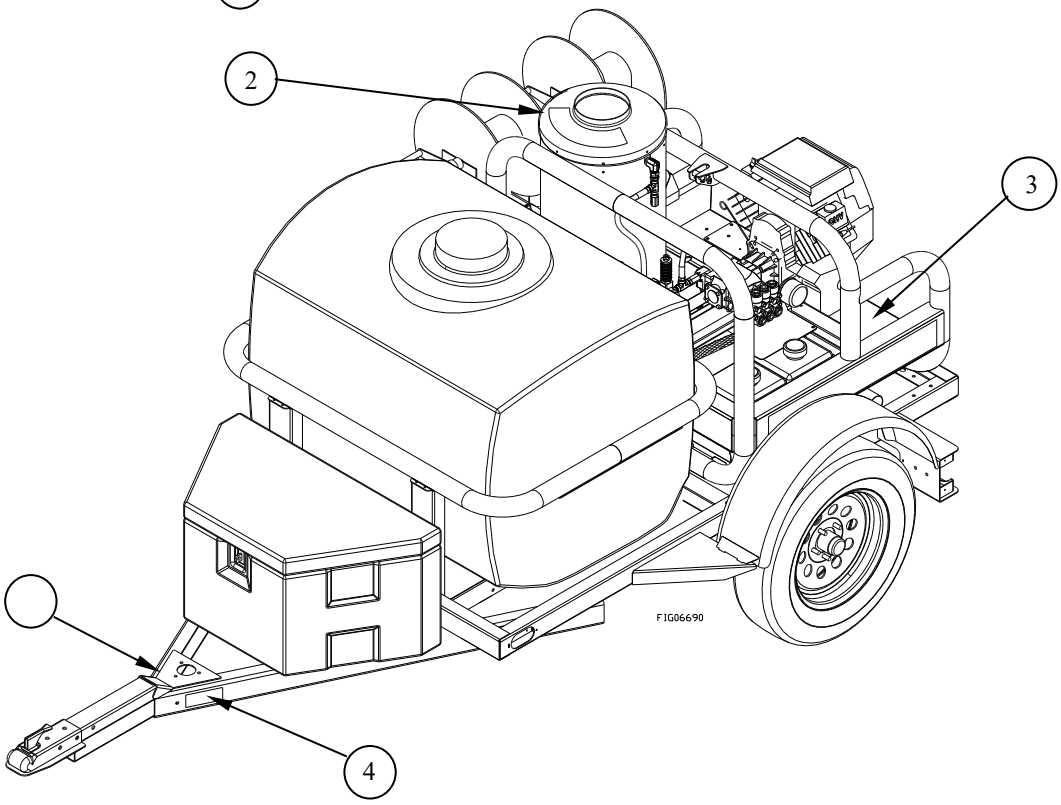

Always make sure safety labels are in place and in good condition. If a safety label is missing or not legible, order new labels or unsafe operation could result. **To order replacement safety labels**, call NorthStar Product Support at **1-800-270-0810.**

Safety Labeling

On-Product Warning Labels

Ref #	Part #	Description
1	782325	Danger & Warning
2	305410	Caution Hot
3	777721	Operating Instructions
4	777778	Towing/Moving Instructions
5	786633	Towing Warning
6	782397	Battery Hazard
7	798057	Rupture Disk Warning
	32821	TFG Lanyard

4

MOVING/TOWING INSTRUCTIONS

Moving trailer by hand:
-Attach caster wheel to jack.
-Crank jack down.
-Do not attempt to move trailer up or down slope by hand.

Towing trailer:
-Latch coupler securely to class 3 or higher hitch with 2" ball.
-Make sure hitched trailer sits level.
-Crank jack to UP position and remove caster wheel.
-Attach safety chains to the tow vehicle.
-Check local, state and federal requirements before towing on public roads.

1

⚠DANGER

FOR OUTDOOR USE ONLY! Using this pressure washer indoors CAN KILL YOU IN MINUTES. Engine exhaust and burner exhaust contain carbon monoxide. This is a poison you cannot see or smell.

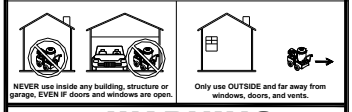

NEVER use inside any building, structure or garage, EVEN IF doors and windows are open.

Only use OUTSIDE and far away from windows, doors, and vents.

⚠WARNING



High Pressure Fluid Forces / Burn Hazards

High pressure spray can cause injection injury, eye injury, and loss of balance. Hot discharge fluid and hot surfaces can burn.

- NEVER direct discharge stream at or near any person. Do not allow any part of the body to come in contact with the fluid stream.
- Gun kicks back - hold with two hands. Keep good footing and balance at all times.
- Surfaces of engine, burner, and wand can become very hot. Use only designated gripping area of wand. Avoid contact with hot engine and burner.



Fire / Explosion Hazard

Spraying flammables can cause explosion. Fuel is flammable and explosive. Exhaust can ignite combustible materials.

- NEVER spray flammable liquids. Operate only where open flame or torch is permitted.
- NEVER fuel a running or hot engine or oil burner.
- Ensure there are no fuel leaks before starting. Keep sources of sparks and flames away.
- Use approved container only for transferring fuel. Clean up fuel spills immediately.
- Keep engine and burner exhaust at least 7 feet from all combustible objects. Situate on heat-resistant flooring when using burner.



Chemical Exposure Hazard

- Understand all safety hazards and first aid measures for chemicals being used.
- Follow chemical manufacturer's directions when handling and cleaning with chemicals. Wear safety gear as directed.



Electric Shock Hazard

Keep spray away from electrical wiring, or electric shock / electrocution could occur.

CAUTION: To Reduce Risk of Injury, Read Operating Instructions Carefully Before Using.

782325

3

⚠WARNING

...or other serious injury.

-RISK OF ELECTRIC SHOCK. Do not discharge stream at pressure washer.
-Risk of injection or severe injury to persons. Keep clear of nozzle. Do not direct discharge stream at persons. This machine is to be used only by qualified operators.
-Risk of explosion. Operate only where open flame or torch is permitted.
-Risk of fire. Do not refuel while product is operating or still hot.
-Gun kicks back. Hold with both hands.
-Hot discharge fluid. Do not touch or direct discharge stream at persons.
-Hot surfaces. Use only designated gripping areas of spray wand.
-Risk of explosion. Disconnect battery before servicing.
-To reduce the risk of injury, read operating instructions carefully before using.

OPERATING INSTRUCTIONS:

START-UP

1. Attach garden hose or water supply hose.
2. Attach pressure hose.
3. Attach gun and lance.
4. Open water supply valve.
5. For cold engine, move CHOKE lever to full choke position, for warm engine, move choke lever to half choke or run position.
6. Turn KEYSTART switch to ON. Engine starts.
7. When engine starts, move CHOKE lever to run position.
8. Remove spray nozzle from lance and squeeze trigger until air is purged from hoses.
9. Install spray nozzle for high pressure spray.
10. Turn HEAT switch ON for hot mode.

SHUT-DOWN

1. Turn HEAT switch OFF.
2. Spray cold water for two minutes.
3. Turn engine on-off switch to OFF position.
4. Turn gas line valve to OFF position.
5. Turn water supply OFF.
6. Squeeze trigger to relieve system pressure.

POWERED by Honda Engines

NORTH STAR Proven Performance

2

⚠WARNING

Be aware that vehicle handling will be affected when towing the filled pressure washer. Pulling a trailer requires special driving skills. Exercise caution to avoid loss of control or pressure washer overturning.

- Keep speed to a minimum so you can maintain control at all times. Reduce speed prior to turns.
- Allow for wider turns and for more distance to stop.
- Avoid any sudden steering maneuvers, starts, or stops that could create sway.
- Slow down and exercise extra caution on rough or sloped terrain in order to reduce risk of rollover.
- Be aware of the added length of the pressure washer.
- Be aware that visibility may be reduced with pressure washer attached. Be extra cautious when backing up or turning.
- If towing on a public road, make sure to comply with all local, state, and federal towing requirements.

See additional safety rules in the Operator's Manual.

⚠CAUTION HOT!

6

⚠WARNING - BATTERY HAZARDS

BATTERIES:
1) contain caustic acid, 2) emit explosive gases, 3) can cause electric shock

- **ALWAYS use eye protection. Caustic acid and explosive gases can cause blindness or severe burns.**
- **NO smoking, sparks, or flames.**
- **NEVER touch both battery terminals at the same time with your hand or any non-insulated tools.**
- **FLUSH immediately with water if battery acid contacts eyes, skin, or clothing.**
- **CONNECT cables in correct sequence: FIRST RED to POSITIVE terminal, then BLACK to NEGATIVE terminal. When disconnecting, DISCONNECT BLACK cable first, then RED.**
- **NEVER charge a visibly damaged or frozen battery. ALWAYS read and follow charger instructions.**

782397

FIG03335

7

⚠WARNING

IF RUPTURE DISK ACTIVATES AND RELEASES WATER:

- Turn heat switch OFF
- Turn power switch OFF
- Turn water supply OFF
- Pull spray gun trigger to release pressure
- Unplug pressure washer, or remove the spark plug wire

Do not use pressure washer until Product Support arranges for repair or replacement.

Failure to turn off immediately could result in serious injury.

Call 1-800-270-0810

Special Equipment Safety Features

High Pressure Safety Device (Rupture Disc)	**⚠WARNING: If the high-pressure safety device ever discharges water, turn the engine off and do not use the machine. The device will no longer function properly. See a dealer or call Product Support at 1-800-270-0810.** This unit is equipped with a high pressure safety device, which acts as a backup safety feature. If the unloader malfunctions, the high-pressure safety device will open and relieve excess system pressure. 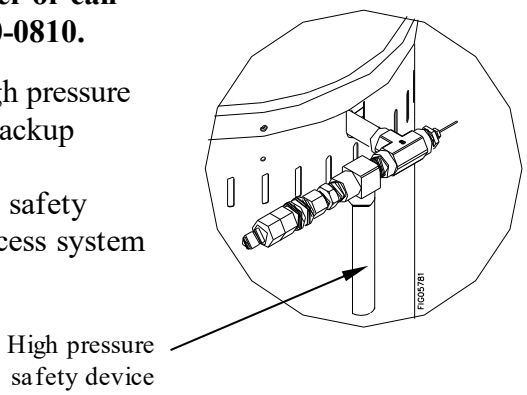
High Temperature Limit	This unit is equipped with a high temperature limit that measures discharge spray temperature and automatically turns the burner off when the temperature setting is reached. When the discharge spray temperature drops, the burner automatically reignites. 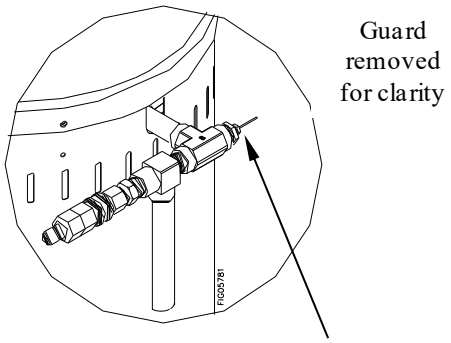
Spray Gun Safety Latch	The spray gun is equipped with a built-in trigger safety latch to guard against accidental trigger actuation. 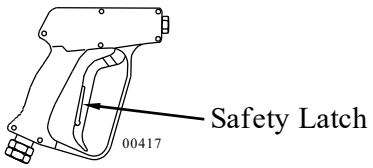

Assembly and Initial Set-Up

Steps for Assembly / Initial Set-Up

Step 1. Unpacking & Delivery Inspection
Step 2. Trailer Assembly
Step 3. Initial Pump & Engine Preparation
Step 4. Battery Installation

Each of these steps is discussed in the below:

Step 1. Unpacking & Delivery Inspection

Find and separate the components identified in Figure 2 – Overview of Pressure Washer Components and Figure 3 – Hardware Bag. Inspect the pressure washer immediately after you receive delivery for missing parts and damage.

- If you have missing or damaged components, contact Product Support at 1-800-270-0810.
- The trailer title is located inside the battery box and should be removed and stored in a safe/secure location.

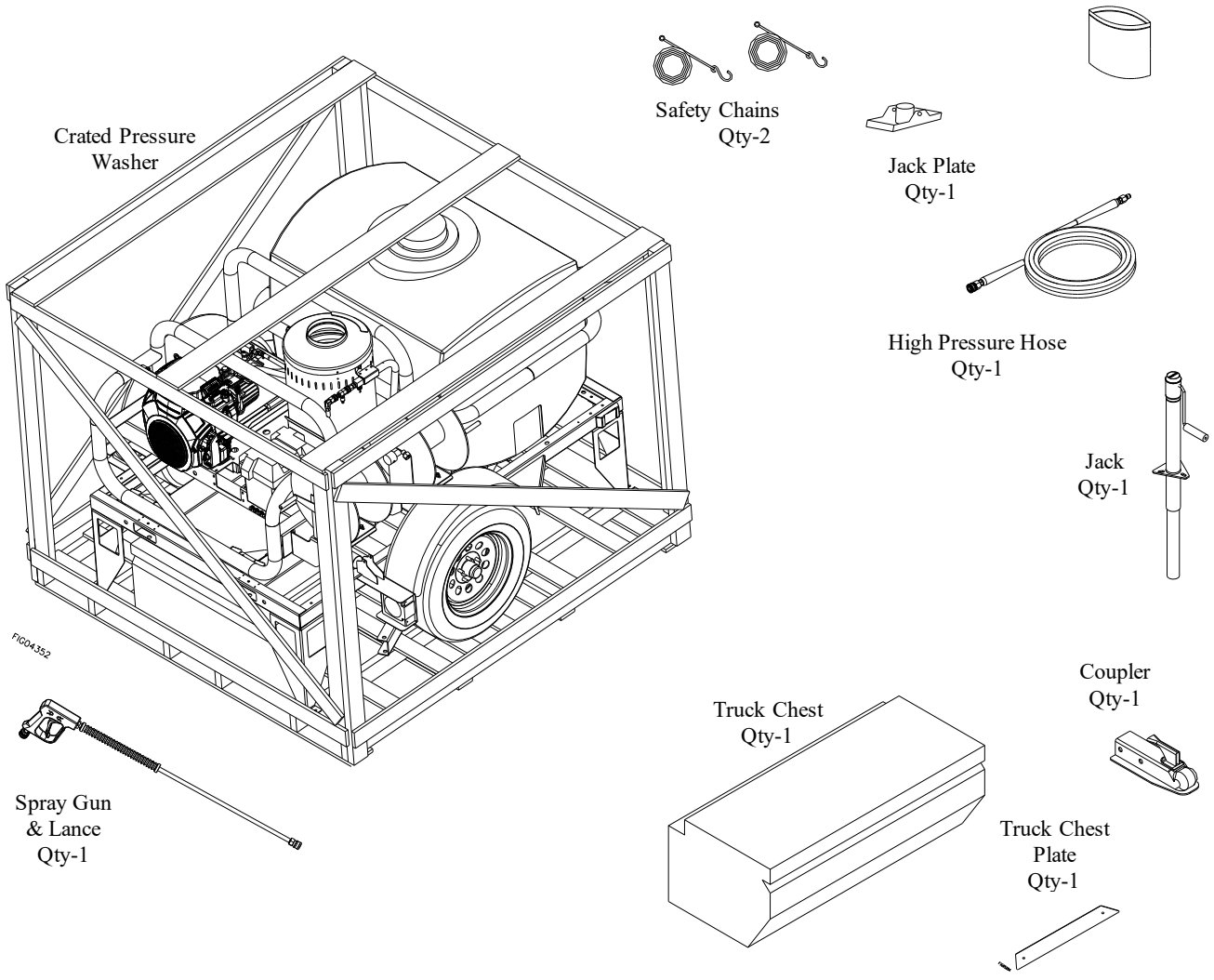

Figure 2 – Overview of Pressure Washer Components

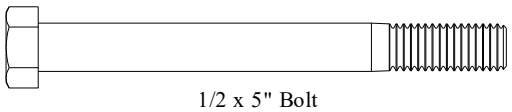

1/2 x 5" Bolt
Qty-1
Part # 82119

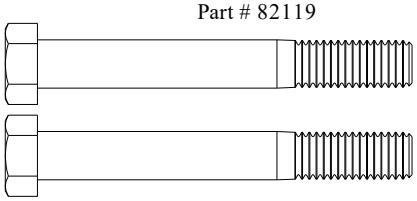

1/2 x 4" Bolt
Qty-2
Part # 82250

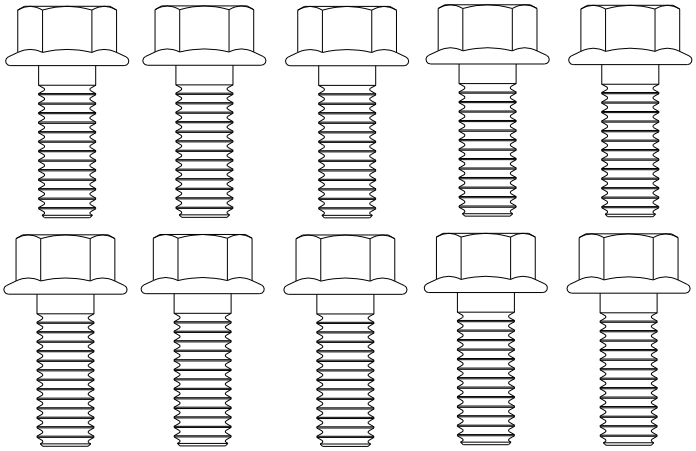

5/8 x 1-3/4" Bolt
Qty-10
Part # 82664

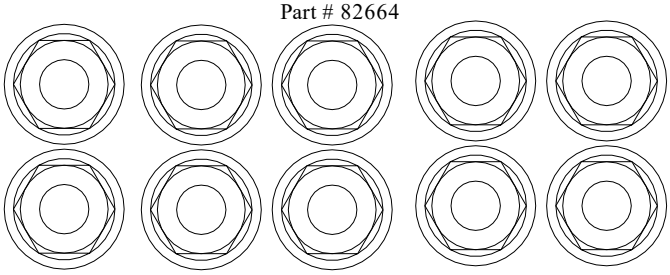

5/8" Class G Nut
Qty-10
Part # 82288

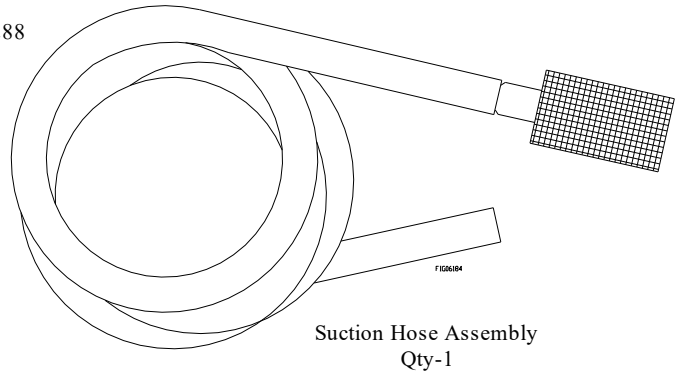

Suction Hose Assembly
Qty-1
Part # 221222 and 777165

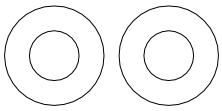

1/2" Flat Washer
Qty-2
Part # 82122

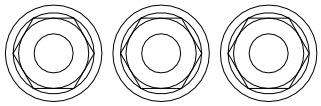

1/2" Class G Nut
Qty-3
Part # 82291

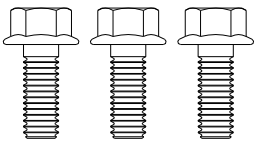

3/8 x 1" Bolt
Qty-3
Part # 82023

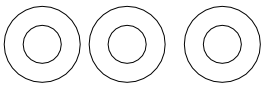

3/8" Flat Washer
Qty-3
Part # 82028



3/8" Lock Nut
Qty-3
Part # 82027

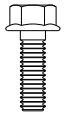

1/4" Nut
Qty-1
Part # 82222

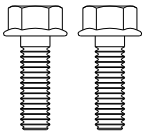

5/16 x 1-1/4" Bolt
Qty-2
Part # 82480

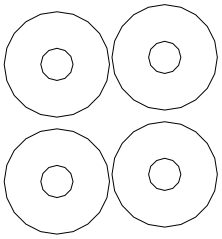

5/16 Flat Washer
Qty-4
Part # 82099

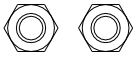

5/16" Lock Nut
Qty-2
Part # 82020

Figure 3 – Hardware Bag contents

Step 2. Trailer Assembly

⚠WARNING: The pressure washer is heavy. It can crush and cause serious injury if it rolls out of control or tips over. Follow all assembly instructions exactly as presented below.

1.) Remove the top boards and four sides of the wooden crate.
2.) Remove A-frame from pallet under the trailer.
3.) Slide A-frame into holders under trailer frame (built into the front posts).
4.) Install jack onto A-frame with 3/8x1" bolts, 3/8" lock nuts, and washers provided. Tighten to 37 ft.-lbs.
5.) Crank jack down until A-frame becomes level (parallel to ground).
6.) Install A-frame to trailer frame with six 5/8" bolts, and Class G nuts in the order shown. Tighten to 180 ft.-lbs. Use a torque wrench.
7.) Route bundled wires from trailer frame through bottom side of A-frame, make sure wires are not pinched, stretched, or pass any rough edges. Install ground wire to the tow bar frame using 1/4 x 2” bolt and 1/4” nut.

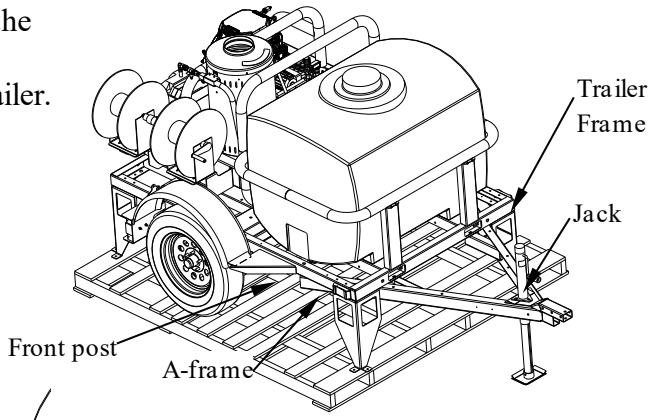

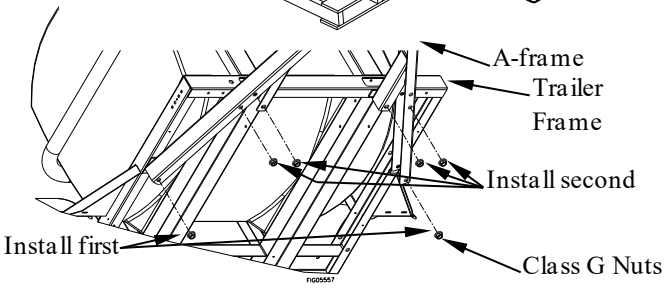

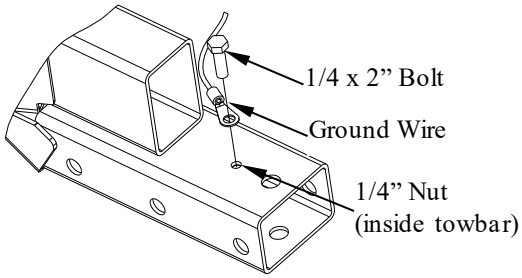

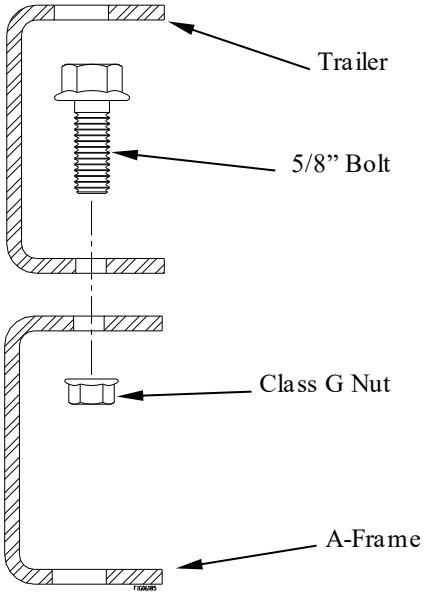

Step 2. Trailer Assembly (continued)

8.) Crank jack down farther (so A-frame goes up) to take weight off front shipping posts.
9.) Remove front shipping posts.
10.) Crank jack up as far as it will go (so A-frame goes down and weight is applied to wheels)
11.) Disconnect rear shipping posts from frame (remove only the bolts at the top of the rear shipping posts)
12.) Roll trailer forward until it is free of the rear shipping posts

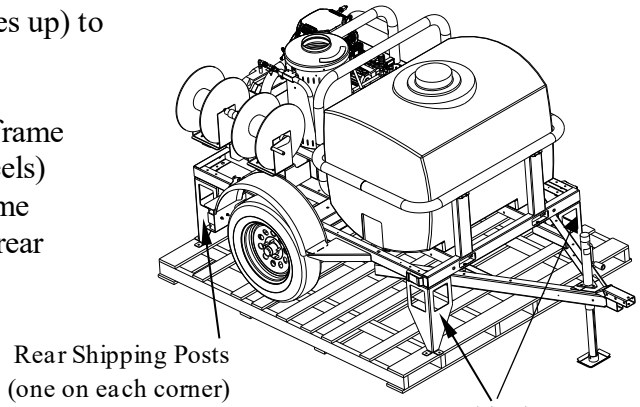

13.) Attach coupler to a-frame with two 1/2x4" bolts and Class G lock nuts. Tighten each bolt to 90ft.-lbs. Use a torque wrench.
14.) Attach safety cables to the a-frame with 1/2" x 5" bolt and Class G lock nut. Place a flat washer next to the head of the bolt, slide the bolt through the cable and the A-frame. Then slide the other cable onto the bolt, followed by another washer then the lock nut. Tighten to 37ft.-lbs.
15.)Attach truck chest to A-frame with four 5/16 x 1-1/4" bolts, lock nuts, and washers. Align two tool box plates with holes in bottom of tool box. Place a flat washer onto the bolt, then insert bolts down though holes in plate, truck chest and A-frame. Place washers under wall of A-frame and fasten with lock nuts. Tighten each bolt to 20ft.-lbs.

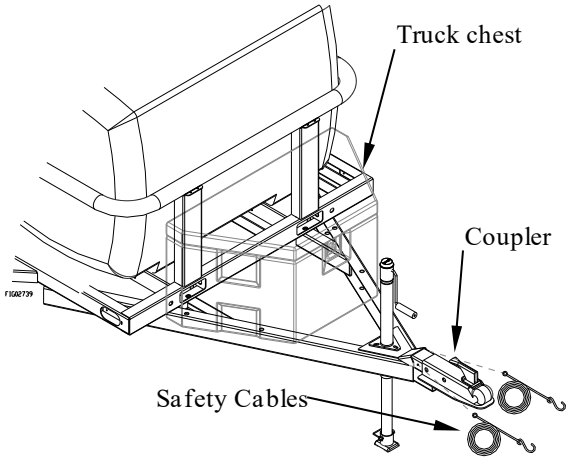

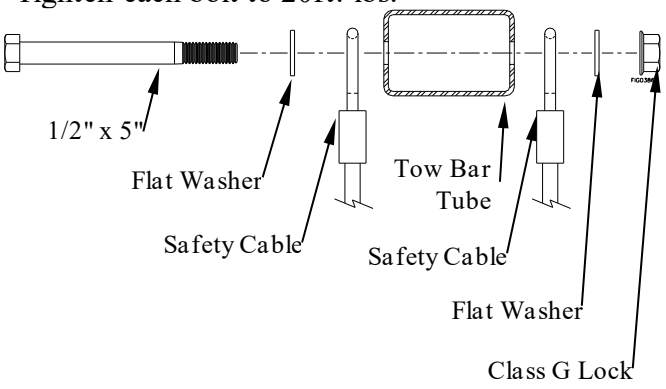

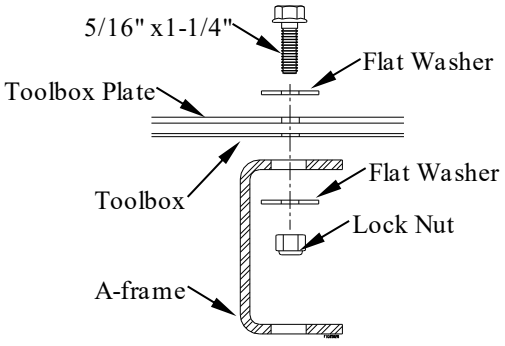

Step 3. Initial Pump, Engine & High Pressure Hose Preparation	
Prepare Water Pump	**Verify pump oil level**. Note: The pump is shipped <u>with</u> oil. *Change oil after first 40 hours, then every 3 months or 500 hours 1. Verify oil level: a. Remove shipping tape and black vent plug (if present) from oil fill cap. Verify that oil level is half way up the sight glass (or at the indicator line on the dip stick, if equipped). 2. If oil level is low, fill using SAE30 non-detergent oil or Cat Pump Oil Item #22158. 3. Replace oil fill cap. 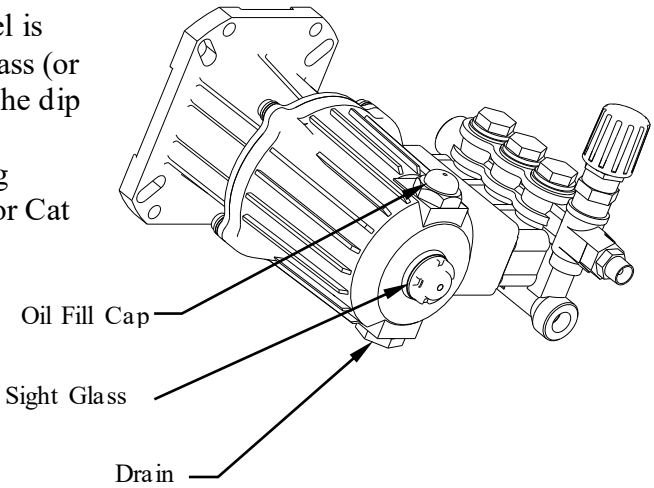
Prepare Engine	**Fill the engine with oil**. Note: The engine is shipped <u>without</u> oil. Refer to the Engine Manual to locate oil-fill port and for instructions on filling. Use the oil grade and quantity specified in the Engine Manual.
Prepare High Psi Hose on Hose Reel	**Completely unwrap / unwind the high pressure hose from the hose reel.** Note: New hose will "grow" when charged for the first time and should always be charged one time before being wrapped on the reel.

Step 4. Battery Installation
Install a 12-volt standard automotive battery (Group 75/86) with a minimum 18 amp-hour rating. The engine will run but the burner will not fire unless a battery is installed. The battery is to be supplied by the customer and should be installed in the protective battery compartment located near the engine. The inside dimensions of the battery compartment are 11-1/8"L x 7-3/4"W x 10-1/8"H.

Assembly and Initial Set-Up

Follow the steps below for connecting and disconnecting the battery.

⚠ WARNING: Battery Hazards

Batteries are hazardous because they contain caustic acid, can emit explosive gases, and can cause electric shock. Caution must be exercised when making connections to a battery to avoid shock and contact with the acid, and to prevent any sparking that could lead to an explosion. ALWAYS follow the general battery safety rules and instructions listed below.

General Battery Safety Rules	• ALWAYS use eye protection and protective clothing when handling batteries. • NEVER smoke or work near sparks or other sources of ignition. • NEVER touch both battery terminals at the same time with your hand or any non-insulated tools. • If battery acid contacts skin or clothing, flush immediately with water and neutralize with baking soda.
Connecting the battery	Always connect the cables in the following sequence to avoid possible shock: 1. Find the battery cables located inside the battery compartment. 2. Connect the ***red*** cable to the ***positive*** **(+)** terminal of the battery. 3. Then connect the ***black*** cable to the ***negative*** **(-)** terminal of the battery.
Disconnecting the battery	Always disconnect cables in the following sequence to avoid possible shock. 1. First, disconnect the ***black*** cable from the ***negative*** **(-)** terminal of the battery. 2. Next, disconnect the ***red*** cable from the ***positive*** **(+)** terminal of the battery. 3. Remove the battery from the battery compartment.

Moving and Towing

⚠WARNING

The filled pressures washer is heavy. It can crush and cause serious injury if it rolls out of control or tips over.

- ALWAYS keep the jack cranked down to help balance the trailer when it is not connected to a vehicle hitch.
- FOLLOW all the instructions below for safely connecting and towing the pressure washer.

Connecting Trailer and Towing	
Inspect trailer	**Always inspect the trailer before hitching it to your vehicle.** 1. Make sure tires are fully inflated and in good repair. See tire sidewall for recommended pressure. 2. Check to make sure that trailer is in safe working condition. Make sure all nuts, bolts, and connections are tight. If a part needs replacement, only use parts that meet the manufacturer's specifications. **⚠WARNING:** • Do not over-inflate tires. Serious injury can occur if tire explodes. • Damaged or missing components, or replacement parts that do not meet specifications, may result in a safety hazard or poor operation of the trailer.
Move pressure washer to vehicle	**When moving the pressure washer by hand,** always keep the jack cranked down to provide support if needed.
Attach trailer to hitch	**Attach trailer to vehicle hitch.** When filled, the pressure washer trailer has a tongue weight of 500 lbs. Ensure the towing vehicle is properly equipped to handle the load. 1. Attach trailer coupler to vehicle's class 3 or higher hitch with 2" ball (only). 2. Ensure trailer is level, with A-frame tow bar parallel to the ground. You may need to adjust your coupler height or purchase the proper hitch to achieve the correct tongue height so trailer is level. **⚠WARNING:** Vehicle handling may be adversely affected while towing if the trailer is not level. 3. Adjust coupler to ball by raising locking lever and turning lock nut with fingers. Proper adjustment is obtained when coupler is as tight as possible on ball and locking lever can still be opened and closed. 4. Lock lever closed to secure the attachment. 5. An optional locking pin or padlock may be inserted in the locking lever hole for extra security.

Moving and Towing

Attach safety cables	**Two safety cables must be used while towing**. Cross safety cables under the coupler, allowing only enough slack for vehicle turns.
Plug in lights	**Plug light pin connector into vehicle**.
Raise the jack	**Always crank the jack into the UP position before towing.**
Tow	**Tow the pressure washer to your desired work location.** When towing, always adhere to the following safety rules. • **Read vehicle instructions**. Review towing safety instructions in your towing vehicle manual. • **Driving skills**. Special attention and driving skills are necessary for towing any type of trailer. • **Vehicle handling.** Be aware that vehicle handling will be affected when towing the filled pressure washer. Exercise caution to avoid loss of control or pressure washer overturning: o **Keep speed to a minimum** so you can maintain control at all times. Reduce speed prior to turns. o **Allow for wider turns** and for **more distance to stop**. o **Avoid any sudden** steering maneuvers, starts, or stops that could create sway. • **Rough or sloped terrain**. Slow down and exercise extra caution on rough or sloped terrain in order to reduce risk of rollover. Pick the most level route possible when transporting across fields. Drive up and down slopes that cannot be avoided, rather than across. Use a vehicle equipped with a Roll Over Protection System (ROPS) if you will be operating on non-level terrain. • **Added length**. Be aware of the added length of the pressure washer. • **Reduced visibility.** Be aware that visibility may be reduced with pressure washer attached. Be extra cautious when backing up or turning. • **Ride / transport.** Never ride or transport cargo on the pressure washer. • **On public roads.** If towing on a public road, make sure to comply with all local, state, and federal towing requirements. It is the sole responsibility of the purchaser to obtain licensing, trailer lights, safety chains or signage as needed to comply. • **Under the influence**. Never tow or operate this pressure washer while under the influence of alcohol, drugs, or medication
If leaving unattended	**Turn off the vehicle and block the trailer wheels** if leaving the pressure washer unattended.

Before Each Use

Follow the steps below prior to each use of the pressure washer.

Steps to Follow Before Each Use

Step 1. Check Equipment
Step 2. Add Fuel(s)
Step 3. Select Suitable Worksite

Step 1. Check Equipment	
Check/add pump oil	**Check/add pump oil**. *Change oil after first 40 hours, then every 3 months or 500 hours Caution: Never run the pump without sufficient lubrication! 1. Check oil level. Verify that oil level is half way up the sight glass. 2. If oil level is low, fill using SAE30 non-detergent oil or Cat Pump Oil Item #22158. 3. Replace oil fill cap.
Check/add engine oil	**Check the engine oil level and add oil as needed.** Use the recommended oil type for your engine and expected ambient conditions. (See engine Owner's Manual for oil type and capacity, and more detailed oil check/fill instructions.) ⚠ **WARNING: Burn hazard** Never open oil port while engine is running. Hot oil can spray over face and body. *Notes:* o *Low oil shutdown feature prevents the engine from starting or running without sufficient oil.* o *Engine is shipped without oil. You must add oil before first use.*
Inspect spray system	**Always inspect spray system for damage and leaks before each use.** Do not start pressure washer until all needed repairs have been completed. ⚠ **WARNING: High pressure fluid injection hazard** High-pressure fluid discharge from leaks (even pin-sized) or ruptured components can pierce skin and inject fluid into the body. Injection injury can result in blood poisoning and/or severe tissue damage leading to infection, gangrene, and possibly amputation. • Never use a finger or skin to check for leaks. • Never operate machine with damaged or missing hoses/parts.

	• Never attempt to repair a high-pressure hose or component – Always replace it with a part that is rated at or above the pressure rating of this machine. 1) Check hoses, fittings, wand, trigger gun and connections for signs of wear, cracks, looseness, or leaks. Replace as required. 2) Check and clean the nozzle orifice. 3) Clean inlet filter. (See Maintenance instructions)
Inspect fuel system	**Always inspect (engine and burner) fuel systems & check for leaks BEFORE starting pressure washer.** Do not start pressure washer until all needed repairs have been completed. ⚠ **WARNING:** Fuel leak hazard Gasoline and burner fuels are highly explosive and fuel leaks can result in fire or explosions. You can be burned and seriously injured if the fuel system is not properly hooked up or there is a fuel leak when you start the engine. Inspect the entire fuel system. Look for: • signs of leaks or deterioration, • chafed or spongy fuel hose, • loose connections, • loose or missing fuel hose clamps, • damaged gasoline tank, or • defective gasoline shut-off valve.
Perform other scheduled maintenance as needed	**Make sure that any other regular maintenance has been performed as prescribed in this manual in the "Maintenance & Repair" section.** 1. Refer to the engine owner's manual for engine maintenance instructions. 2. Make sure battery is charged. Charge as needed according to your battery manufacturer's instructions.

Step 2. Add Fuel(s)

⚠**WARNING**: **Fuel fire/explosion hazard**
Gasoline is highly flammable and explosive. Burner fuels are combustible at warm temperatures. Heat, sparks, and flames can ignite fuel vapors, which can become widespread during fueling. A flash fire and/or explosion could result and cause serious injury or death. Always use extreme care when handling fuels. Carefully follow all instructions to avoid the following conditions which could result in fuel ignition:

- gas vapor collection inside enclosures
- static electric sparks
- sparks from electric wiring, batteries, or running engines
- sources of heat (such as a hot engine, burner or exhaust)
- open flames, including pilot lights



Before Each Use

Always follow these general safety rules when fueling:

1) Turn pressure washer off and allow to cool for at least two minutes before removing any fuel cap.
   Note: A running, or still-hot engine or burner is hot enough to ignite fuel.
2) Fill fuel tank OUTDOORS – never indoors. Fuel vapors can ignite if they collect inside and enclosure and explosion can result.
3) Stay away from all sources of heat, sparks, and flames. Do not smoke.
4) Never pump fuel directly into the gas tank or burner at a gas station – it could cause a static electric spark. Follow these steps to avoid static electric sparking during fueling:
   - Use an approved portable container to transfer fuel to the pressure washer's tank. (A portable container made of metal or conductive plastic is preferred because it dissipates charge to ground more readily.)
   - Always place container on the ground to be filled. Never fill the portable gas container while it is sitting inside a vehicle, trailer, trunk, or pick-up truck bed.
   - Dissipate static charge from your body before beginning the fueling process by touching a grounded metal object at a safe distance from fuel sources.
   - Keep nozzle in contact with container while filling. Do not use a nozzle lock-open device.
5) Clean up fuel spills /splashes immediately.
   - If possible, move the pressure washer away from spilled fuel on the ground.
   - Wipe up spilled fuel and wait 5 minutes for excess fuel to evaporate before starting engine.
   - Fuel soaked rags are flammable and should be disposed of properly.
   - If fuel is spilled on your skin or clothes, change clothes and wash skin immediately.

Fill engine fuel tank	**Check the gasoline tank level. If needed, fill tank** with fresh unleaded gasoline from a portable container: 1) Remove engine gas cap. 2) Add gasoline through the fill opening: - Use only a UL-approved portable gasoline container to transfer the gasoline to engine's tank. - Do NOT overfill the gasoline tank. Allow at least 1/2" of empty space below the fill neck to allow for fuel expansion. 3) Replace gas cap securely before starting engine. 4) Store extra gasoline in a cool, dry place in an UL-approved, tightly sealed container.
Fill burner fuel tank (if planning to use heated water)	**If you are planning to use heated water, fill burner fuel tank with #1 or #2 diesel, B5 or lower biodiesel, kerosene, or fuel oil.** 1) Remove burner fuel cap. 2) Add fuel through the fill opening. Do not overfill. Allow at least 1/2" of empty space below fill neck to allow for fuel expansion. 3) Replace fuel cap securely before starting engine. 4) Wipe any excess fuel from unit before starting.

Step 3. Select Suitable Outdoor Worksite

Before using the pressure washer, you must understand the criteria for selecting a suitable location for operation. Note that this pressure washer is for OUTDOOR USE only.

⚠ WARNING:
You must choose a suitable site for operating your pressure washer to avoid equipment damage and/or injury and possible death from carbon monoxide poisoning, fire/explosion, uncontrolled equipment movement/tip over, or slips and falls. Choose a site that meets all of the following five criteria:

1. OUTDOORS only, and away from all building windows and air intakes.
2. Where no flammable vapors, dusts, and gases are present.
3. Where there is adequate, unobstructed ventilation airflow.
4. With adequate clearance from combustible materials.
5. On a firm, level, heat-resistant surface with good drainage.

Details regarding each of these criteria are provided below.

1. Outdoors ONLY

⚠ DANGER: Carbon monoxide poisoning hazard
Exhaust fumes from both the engine and the burner contain carbon monoxide (CO), a poisonous gas you cannot see, smell, or taste. The CO generated by the pressure washer can rapidly accumulate, even in areas that appear to be well ventilated, resulting in dangerous and fatal concentrations within minutes. Follow the directions below for choosing a location to operate your pressure washer in order to avoid carbon monoxide poisoning.

The location you choose to operate the pressure washer must be OUTDOORS and at least 20 feet from the home, away from windows, vents and air intakes, to allow proper ventilation. If you start to feel sick, dizzy, or weak while using the pressure washer, shut off the engine and get to fresh air RIGHT AWAY.

- Never run the pressure washer in an enclosed or partially enclosed location such as a building, garage, barn, shed, or house. *These spaces can trap poisonous gases. Running a fan or opening windows will not provide adequate ventilation to prevent dangerous CO build-up.*
- Only use the pressure washer outdoors and far away from open windows, doors, and building or vehicle vents.
- Place the pressure washer so that the exhaust fumes will not be directed towards people or building air intakes.
- Ensure that working, battery-operated or battery back-up carbon monoxide alarms are used in any dwelling/structure that is in close proximity to the running pressure washer.
- Note that this pressure washer is NOT designed or approved for use in vehicles or marine applications. Never run the pressure washer inside RVs or other vehicles, on boats, or on pick-up truck beds.

	⚠ **WARNING:** Never attempt to attach ductwork to the engine muffler or burner exhaust to allow for installation inside an enclosure. This could cause hot air deflection, heat build-up, and increased exhaust back-pressure, resulting in possible exhaust leakage or overheating and damage to the pressure washer.
2. Away from combustible dust, liquids, or vapors	**Do not locate and use the pressure washer in the presence of flammable vapors, dust, gases, or other potentially combustible materials.** Burner is an open flame, which can ignite airborne dusts and flammable vapors. Operate only where open flame or torch is permitted.
3. Adequate ventilation airflow	**The pressure washer needs adequate, unobstructed flow of air to allow for proper combustion and adequate cooling.** Proper combustion can only be obtained when there is a sufficient supply of oxygen available for the amount of fuel being burned. Cooling ventilation is required to prevent overheating of the pressure washer and possible fire. • Situate so there is adequate clearance around pressure washer to allow for airflow – at least 7 feet from any non-combustible wall or obstruction. • Never place any objects against or on top of the pressure washer. • Do not operate with a tarp, blanket, or cover surrounding the pressure washer.
4. Hot exhaust clearance	**The exhaust gas from your pressure washer is extremely hot and can cause combustible materials to catch on fire.** • Make sure both the engine exhaust and burner exhaust are at least 7 feet from all combustible materials and structures during operation. • Equip the engine with a spark arrestor if the pressure washer will be used near any ignitable forest, brush, or grassy land. (See the engine manual provided with this equipment to determine if the engine is already equipped.) Make sure you comply with applicable local, state, and federal codes. • Keep a fire extinguisher rated "ABC" nearby. Keep it properly charged and be familiar with its use.
5. Firm, level, heat-resistant surface with nearby water supply	**The pressure washer should be positioned on a firm, level (less than 3 degree slope), heat-resistant surface with good drainage and a nearby water supply.** The pressure washer should be placed within garden hose distance of a continuous water supply. Ensure that the pressure washer sits level and will not slide or shift during operation. If applicable, block the pressure washer's wheels to prevent movement. Surface should be heat resistant if you will be using the burner for heated spray.

Operation

After you have checked and fueled the equipment and positioned it in a suitable worksite, it is time to start your pressure washer. The following are the procedures necessary for safe, successful operation of your pressure washer.

⚠ WARNING

Carefully read and follow all instructions and safety information for using this pressure washer. Improper use or maintenance of the pressure washer can result in ***serious injury or death*** to the operator or bystanders from:

- ***Carbon monoxide poisoning***
- ***Skin/eye injury from high pressure spray***
- ***Fire/explosion***
- ***Burns***
- ***Electric shock***
- ***Chemical exposure***
- ***Slips/falls***
- ***Flying objects/debris***

Operating Instructions

Step 1. Connect Hoses, Water Supply, and Spray Nozzle

Step 2. Set Up for Chemical Spray (if desired)

Step 3. Spraying

Step 4. Stopping

Each of these procedures is discussed in detail below:

Step 1. Connect Hoses, Water Supply, and Spray Nozzle	
Position pressure washer for use	**Place pressure washer in a suitable location for use,** as directed in the "Before Each Use, Step 3: Select Suitable Worksite" section of this manual. A suitable location is: • OUTDOORS only, away from all building air intakes. • Where no flammable vapors, dusts, and gases are present. • Where there is adequate, unobstructed ventilation airflow. • With adequate clearance from combustible materials. • On a firm, level, heat-resistant surface with good drainage and nearby access to a continuous water supply. **⚠ DANGER: Carbon monoxide poisoning hazard** Exhaust fumes from both the engine and the burner contain carbon monoxide (CO), a poisonous gas you cannot see, smell, or taste. The CO generated by the pressure washer can rapidly accumulate, even in areas that appear to be well ventilated, resulting in dangerous and fatal concentrations within minutes. ONLY run pressure washer OUTDOORS and at least 20 feet from the home, away from windows, vents and air intakes, to allow proper ventilation. If you start to feel sick, dizzy, or weak while using the pressure washer, shut off the engine and get to fresh air RIGHT AWAY. NEVER run pressure washer inside any enclosed or semi-enclosed spaces, including homes, garages, basements, sheds, boxes, pick-up truck beds, RVs, or boats. These spaces can trap poisonous gases, EVEN if you run a fan or open windows.

Connect your water supply

If using tap water:
Follow these instructions when supplying water from a pressurized source such as city tap water:

Acquire a suitable garden hose and attach to the water supply:

1. Acquire a suitable garden hose:
    a. The water supply garden hose must have an inside diameter of at least 5/8". If the hose is more than 100 ft. long, the diameter must be at least 3/4".
    b. Always use a flexible rubber hose for your water supply. Do not use rigid piping.
    c. The use of a backflow preventer on the water supply hose is recommended and may be required by local code.
2. Attach garden hose to water supply. Make sure it is not kinked.

Check adequacy of water supply:

1. Water supply should be standard tap water.
2. Make sure the water is clean. Debris can cause excess pump wear and reduce performance.
3. Make sure the water supply is steady and capable of flowing at a rate 20% over the rated flow of your pump. An insufficient water supply will damage your pump. Use a stopwatch to time how long it takes to fill a 5 gallon bucket with your garden hose. It should take less than 62 seconds.

Attach garden hose to the water inlet on the pump:

1. Attach garden hose to the water inlet on the pump for city tap water. See "Machine Component Identification" section of this manual for location of water inlet.
2. Confirm rubber washer and inlet screen are in the pump inlet before attaching the garden hose.
3. OPEN the city tap water ball valve and CLOSE the tank feed ball valve, as illustrated in the diagram below.

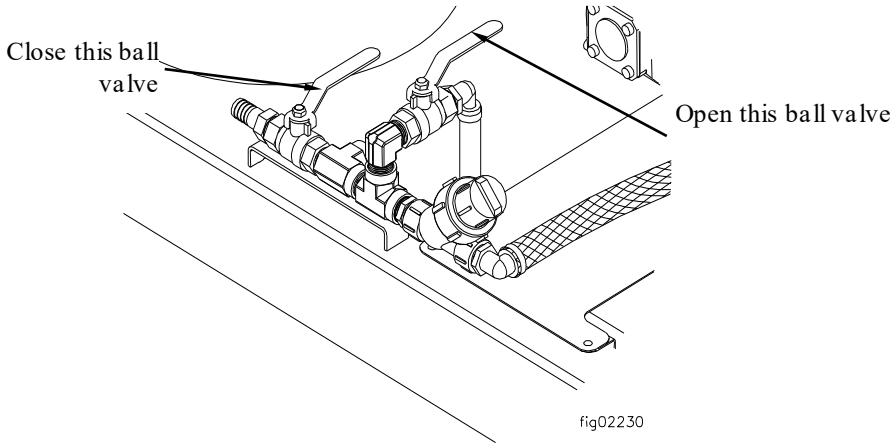

If using water tank:
Follow these instructions when supplying water from the feed tank:

1. Ensure that you have the tank feed ball valve OPEN, and the city tap water ball valve CLOSED, as indicated in the diagram below.

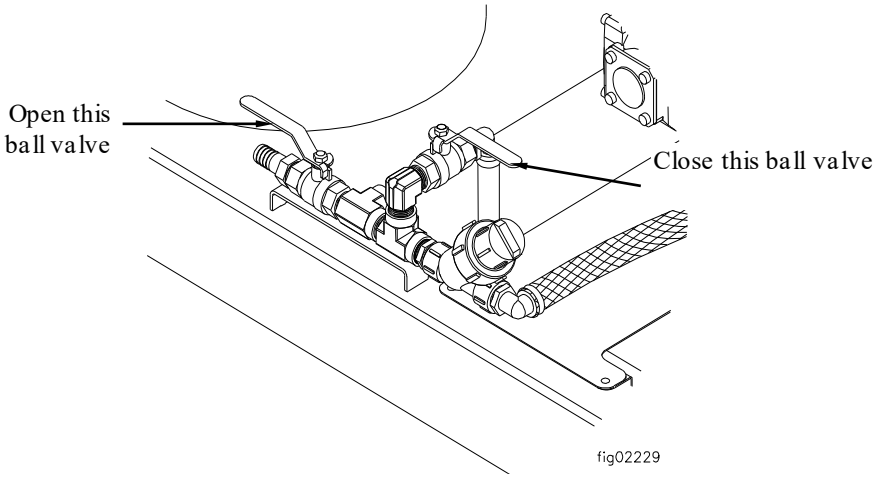

2. Make sure the water in your tank is clean. Debris can cause excess pump wear and reduce performance.

Attach high pressure hose

Attach the high pressure hose to the pressure washer's water outlet.

⚠ WARNING:
NEVER operate this pump with components (such as hose, connections, and spray gun) rated for lower pressure and/or temperature limits than the machine's maximum rated pressure and temperature, or component could rupture and cause serious personal injury from escaping high pressure fluids.

1. See "Machine Component Identification" section of this manual for location of the pressure washer's water outlet.
2. Your pressure washer hose is equipped with quick couplers. Simply pull the collar back and push the coupler onto the water outlet nipple. (Figure 8a). The collar should slide over the ball bearings.

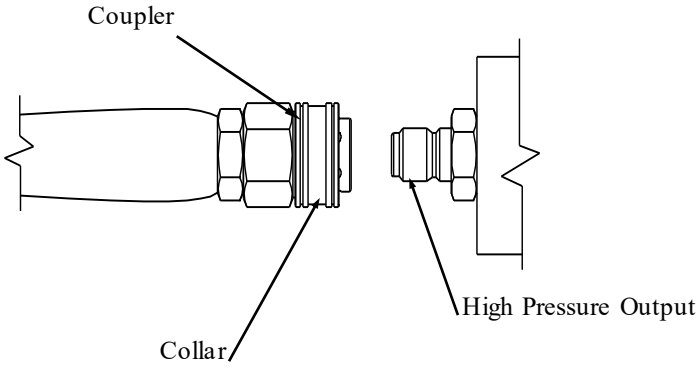

Figure 8a

3. Release the collar, making sure it springs back and re-seats to its original (non-retracted) position. (Figure 8b). *Check the connection by pulling on the hose to ensure a positive connection.*

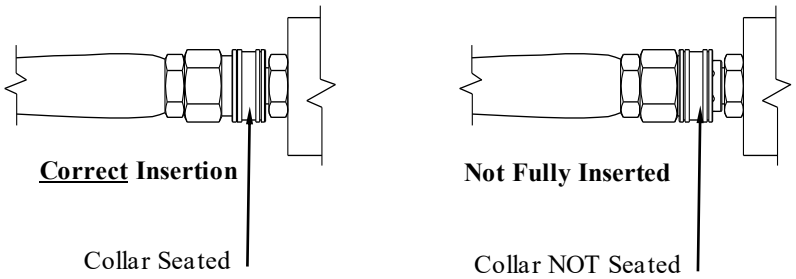

Figure 8b

Select spray nozzle

Your pressure washer is equipped with four high-pressure nozzles and one low-pressure nozzle. Generally, the wider the spray angle of the nozzle, the lower the spray pressure produced. Select the appropriate nozzle for the job based on the following table:

Color of Nozzle:	Spray Angle	Used For:
Red	0	Highest Impact
Yellow	15	Tough Stains/Stripping
Green	25	General
White	40	Light Cleaning
Black-Low pressure	65	Chemicals

NOTE: You must use the low pressure black nozzle for spraying chemicals.

Attach nozzle

Attach nozzle to the spray gun.

⚠ WARNING: Depressurize first

Any time you remove/install/change a nozzle, you must depressurize hose line by squeezing the spray gun trigger while the engine is off. Even if the engine has been off for a long period of time, the hose may remain dang

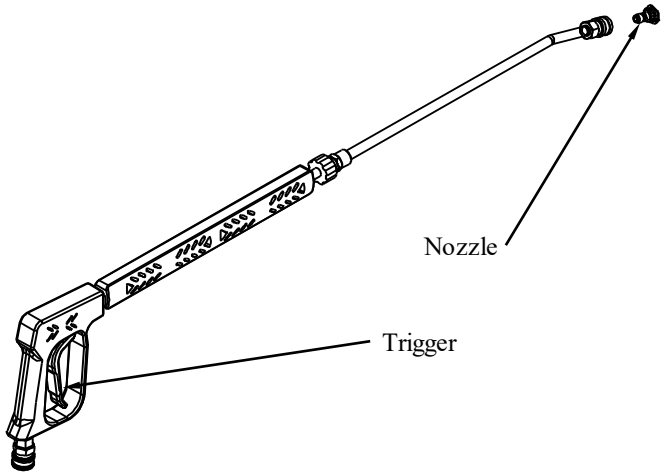

1. Make sure the engine is off and the hose line depressurized.
2. To install the nozzle, pull the collar back and twist the nozzle firmly into the coupler on the end of the wand. (Figure 9a)

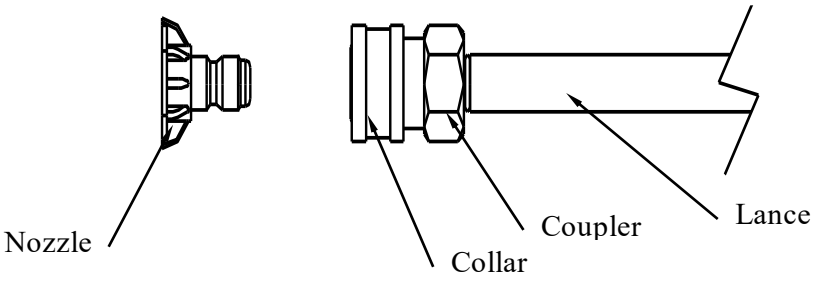

Figure 9a

3. Release the collar, making sure it springs back and re-seats to its original (non-retracted) position. (Figure 9b). *Check the connection by pulling on the nozzle to ensure a tight connection -- if correctly inserted, nozzle will rotate but not pull out.*

⚠WARNING: Make sure the nozzle is correctly inserted. Sprayer nozzle can become a projectile and cause serious personal injury or property damage if not properly connected to the spray gun. Do not attempt to use different types of nozzles that may not fit the coupler.

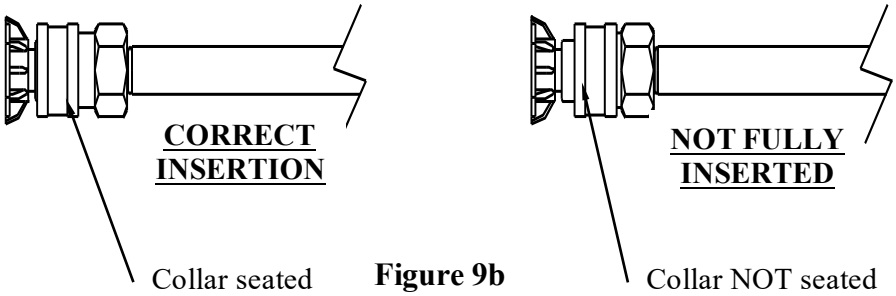

Figure 9b

Step 2. Set Up for Chemical Spray (if desired)

Using the proper cleaning chemical for the application can speed up cleaning jobs tremendously.

Your pressure washer is equipped with a quick connect chemical injector, which siphons cleaning chemicals into a low-pressure washer spray downstream of the pump. Adequate suction pressure is created *only when the low pressure (black) spray nozzle* is used.

The introduction of cleaning chemicals via the chemical injector affords the following advantages:

- It protects the pump from damage because no chemical passes through the pump.
  CAUTION: Certain chemicals, such as bleach or those containing muriatic acid, will cause pump damage if introduced upstream through the pump's water inlet.
- It mixes the cleaning chemical into a low pressure spray. Cleaning chemicals applied under low pressure adhere better to the surface being cleaned, allowing the formula time to react and remove dirt more effectively.

Note: An external *chemical injector pump* is not recommended for use with this pressure washer.

⚠WARNING: Chemical spraying

- Never spray acids, corrosives, or abrasive or flammable liquids. Breathing hazards, surface burns/corrosion, or fire/explosion could result.
- Follow the chemical manufacturer's label instructions for proper use and handling of the chemical. Understand all safety hazards and first aid for all chemicals being used. Always wear protective gloves when handling and cleaning with chemicals, and wear other protective gear as directed by chemical manufacturer. Always dispose of hazardous fluids per local, state, and national guidelines.

Acquire cleaning chemical	Use only NorthStar pressure washer chemicals or chemicals specifically formulated for use with pressure washers. CAUTION: Non-approved chemicals can damage pressure washer components (seals, wand, hoses, pump, etc.) and be harmful to the environment.
Prepare for chemical spray (if planning to use)	Prepare the pressure washer for chemical spraying using the following steps: 1. Prepare (dilute) the chemical cleaning solution as required for the job. (Note: The chemical injector is adjustable and will mix the chemical solution into the spray up to a maximum ratio of 1 part chemical solution to 13 parts water.) 2. Disconnect the high pressure hose from the water outlet. 3. Snap the quick couple chemical injector onto the water outlet, then snap the high pressure hose onto the chemical injector. See Figure 10. 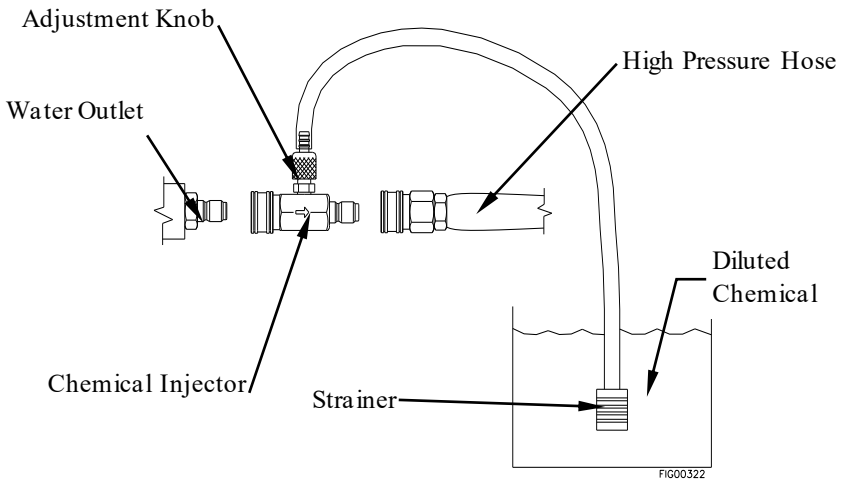 **Figure 10** 4. Submerge the suction strainer connected to the braided chemical hose into a bucket containing the chemical solution. See Figure 10.

Step 3. Spraying

Safety rules for operation

Before starting the pressure washer, review the following general safety rules for operation:

Conditions for Use

Know how to stop. Be thoroughly familiar with proper use of the equipment and all controls and connections. Know how to stop the pressure washer and depressurize system quickly if needed (see "Step 4. Stopping").

Instruct all operators. The pressure washer's owner must instruct all operators and potential renters in safe set-up and operation. Do not allow anyone to operate the pressure washer who has not read the Owner's Manual and been instructed on its safe use.

Adult control only. Only trained adults should set up and operate the pressure washer. Do not let children operate. Pressure washers can generate forces greater than children can control and require judgment beyond what can be expected of children.

Under the influence. Never operate, or let anyone else operate, the pressure washer while fatigued or under the influence of alcohol, drugs, or medication.

Safety equipment / controls in place. Do not operate the pressure washer unless all safety covers, guards, and barriers are in place and in good working order, and all controls are properly adjusted for safe operation.

Damaged. Do not operate the pressure washer with damaged, missing, or broken parts. Never attempt to repair a high pressure hose or component. Always replace it with a part that is rated at or above the pressure rating of the machine.

Modifications. Do not modify the pressure washer in any way or deactivate any safety device. Do not change or add to fuel tank, fuel lines, or exhaust system. Modifications can result in hazards related to carbon monoxide poisoning, fuel leaks, fire, explosion or other serious safety hazards, and will also void the warranty.

During Use

Stay alert. Watch what you are doing at all times.

Clear work area. Clear the work area of all bystanders. Keep children and pets away.

Keep spray away from electrical wiring. Spray contact with electrical wiring will likely result in severe electrical shock or electrocution.

Hot exhaust/parts. Stay clear of engine and burner exhausts. Never touch hot engine muffler, burner/heating coil, or other hot surfaces. All are very hot and will burn you.

Do not direct spray at this machine. Do not attempt to clean this machine with its own spray. Engine damage will result. Cleaning should be done with a damp sponge with the engine OFF.

Let engine cool at least two minutes before refueling.

Avoid inhalation of exhaust. This product emits CO and chemicals known to the State of California to cause cancer, birth defects or other reproductive harm.

Never pull by hose. Do not move this machine by pulling on the hose. Hose or connections could fail and result in catastrophic high pressure release of fluid as well as hose whipping.

Avoid sharp objects. Keep hose away from sharp objects. Bursting hoses may cause injury.

	No load bearing. Do not use the pump to support other items of equipment that impose unacceptable loads on the pump. Do not attempt to use this machine as a prop. **Lock trigger safety latch when not spraying**. Spray gun is equipped with a built-in trigger safety latch to guard against accidental trigger release. Rotate safety latch to the locked position when not spraying. **Leaving unattended**. Always turn off the pressure washer and relieve system pressure before leaving the sprayer unattended. **Prompt Emergency Response** **Seek medical aid for suspected injection injury**. If injured by high-pressure fluid, no matter how small the wound is, see a doctor at once. A typical injection injury may be a small puncture wound that does not look serious. However, severe infection or reaction can result if proper medical treatment is not administered immediately by a doctor who is familiar with injection injuries. **Seek medical aid for suspected carbon monoxide poisoning**. The running engine gives off carbon monoxide, a poisonous gas that can kill you. If you start to feel sick, dizzy, or weak while using the pressure washer, shut off the engine and get to fresh air RIGHT AWAY. See a doctor. You may have carbon monoxide poisoning.
Put on personal protective gear	⚠ **WARNING**: Use personal protective gear to prevent: - Eye and skin injection injury from high pressure spray - Burns from hot water or steam - Eye injury from flying debris 1. Wear waterproof, thermally insulated gloves, safety glasses with side and top protection, face protection, and protective clothing when operating the machine. If spraying pressure washer specific chemicals, wear a respirator mask to avoid inhalation of vapors if directed on the chemical label. 2. Wear non-slip, protective footwear. Use of pressure washer can create puddles and slippery surfaces. Wear footwear capable of maintaining a good grip on wet surfaces.
Prime the water supply	CAUTION: Never run the pump without the water supply connected and primed. Operating the pressure washer without a sufficient incoming flow of water will damage the pump. **If using city tap water:** • Ensure that the city tap water ball valve is OPEN, and the tank feed ball valve is CLOSED. (The ball valve you are not using must be closed before starting the engine or pump cavitation could occur.) • Turn on the tap. Make sure the water supply is steady and flowing at a rate 20% over the rated flow of your pump. (See Step 1 above, "Connect Hoses, Water Supply, and Nozzle"). • Purge air from the water supply hose by squeezing the trigger until a steady stream of water flows out of the nozzle at low pressure. (Air in

	the hoses can cause damage to the pump, so always make sure all the air is out of the hoses before starting the pressure washer engine.) • Make sure the water supply hose is not kinked. A kinked hose will provide insufficient water supply to the pump and reduce its life. Make sure the hose remains unkinked after moving the pressure washer. **If using water feed tank:** • Ensure that the tank feed ball valve is OPEN, and the city tap water ball valve is CLOSED. (The ball valve you are not using must be closed before starting the engine or pump cavitation could occur.) • Make sure the supply hose from the tank is not kinked. A kinked hose will provide insufficient water supply to the pump and reduce its life. Make sure the hose remains unkinked after moving the pressure washer. • Purge air from the water supply hose by squeezing the trigger until a steady stream of water flows out of the nozzle at low pressure. (Air in the hoses can cause damage to the pump, so always make sure all the air is out of the hoses before starting the pressure washer engine.)
Start engine	**Start the engine to power the pump.** 1. Make sure water supply is connected and primed. CAUTION: Running the pump dry will cause damage and void the warranty. 2. To prevent accidental spraying, engage the safety latch on spray gun trigger by rotating it to the locked position. 3. Follow the instructions in the Engine Manual for starting the engine. - If the engine doesn't start on the first try, pressure may build up in the pump. Relieve pressure by squeezing the spray gun trigger before attempting to start engine again. This will make starting easier. ⚠ **DANGER:** Do not inhale engine exhaust. It contains dangerous carbon monoxide that can kill you.
Apply cleaning chemical (if desired)	**If desired, spray cleaning chemical at low pressure** (with or without heated water). 1. Make sure the chemical injector is properly set up according to the instructions in Step 2, "Set Up for Chemical Spraying". *2.* Make sure the low pressure BLACK nozzle is attached before beginning to spray chemicals -- *Only the low pressure black nozzle will allow chemicals to be drawn through the chemical injector into the water stream.*

	3. You can apply chemicals with either warm or cold water. Check chemical label. If warm water is specified, start burner according to instructions provided below. 4. Apply chemicals by squeezing the spray gun trigger. The chemical injector will draw the chemical into the water stream. 5. The chemical concentration of the spray can be changed by turning the chemical adjustment knob located on the chemical injector. 6. Apply chemicals evenly to the cleaning surface. Never use more chemical than is necessary to clean the surface. 7. Allow the chemicals time to react with the dirt before rinsing. 8. Prepare to rinse by changing to a high-pressure nozzle. Changing the nozzle from the low-pressure black nozzle to a high-pressure nozzle will stop the flow of chemicals into the water stream. *Refer to instructions for selecting and changing the nozzle in Step1, "Connect Hoses, Water Supply, and Nozzle".* 9. Rinse with high-pressure spray, either hot or cold, as instructed below.
Turn on burner (If hot spray or steam is desired)	**If HOT spray or steam is desired, turn on the burner:** 1. First make sure vicinity is free of flammable vapors, dust, gases, or other potentially combustible materials. Operate only where open flame or torch is permitted. 2. Make sure there is fuel in the burner fuel tank. CAUTION: Do not run the machine in hot mode without fuel in the burner's fuel tank, or damage can occur. 3. Make sure the engine throttle is all the way open. If it is not, the engine will not supply adequate voltage to the burner, resulting in smoke coming from the heat exchanger during operation. Turn the heat switch ON and adjust the thermostat to the desired temperature. ⚠ **WARNING**: • NEVER attempt to immediately run or re-light the burner if it doesn't ignite the first time. Unburned oil or gas may have accumulated, causing potential explosion or fire hazard. • Do not attempt to set temperature limit above the preset limit. • Never touch hot burner surfaces and stay clear of burner exhaust. All are very hot and will burn you. • Do not inhale burner exhaust. It contains dangerous carbon monoxide that can kill you. 4. The burner will fire when the trigger is squeezed – follow instructions for spraying.

	Note: If burner exhaust is white, adjust burner for peak performance. See the "Oil Burner Adjustment Instructions" step in the "Set-Up" section of this manual. 5. When the trigger is released, a pressure switch automatically turns the burner off. Also, when the temperature setting is reached, the thermostat automatically turns the burner off. ⚠ **WARNING:** It is important that the burner stops firing when the trigger is released. If the burner remains firing, discontinue use until the pressure washer is serviced. Extremely high temperatures can result in serious injury and equipment damage.
Begin high pressure spray	**High Pressure Spray Procedure** ⚠ **WARNING: High pressure spraying safety** • **Keep spray away from people.** Never direct discharge stream at or near any person. Do not allow any part of the body to come in contact with the fluid stream. High-pressure spray can cause serious skin, eye, or falling injuries, and hot water can burn. Injection injury will occur if high-pressure spray pierces the skin, injecting liquid under the skin. Injection injury can result in blood poisoning and/or severe tissue damage leading to infection, gangrene and possibly amputation. Seek medical attention. • **Do not secure trigger open.** To reduce risk of injury, do not attempt to secure the spray gun open by blocking or tying the spray gun in the open position. • **Prevent slips / loss of balance**. High-pressure spray could cause you to lose balance from kickback forces, and wet surfaces can be slippery. - Keep good footing and balance at all times. Do not overreach. - Do not stand on unstable support when spraying. - If spraying from an elevated surface, use fall protection because spray gun kickback can propel you off the elevated surface. When spraying from a ladder or scaffolding, ensure it is firmly anchored from sway or tip-over. - Be aware of puddles and slippery surfaces. Ensure there is adequate drainage to prevent pooling of water. • **Prevent surface damage & flying debris** – Surfaces being sprayed must be strong enough to withstand high-pressure spray or damage may result. In addition, high-pressure spray will dislodge unsecured objects as well as surface chips and debris, resulting in hazardous flying objects that can cause personal injury or property damage. Do not spray brittle surfaces or breakable, fragile, or unsecured objects such as: o stucco or laminar flagstone o some painted surfaces o windows or glass doors (because they may break) o light fixtures, flowerbeds, mailboxes o unsecured, lightweight objects

Procedure:

1. Put on one of the high-pressure spray nozzles (always relieve system pressure first and follow instructions for attaching a nozzle).
2. Clear the cleaning area of all persons. Keep children and pets away.
3. Hold the spray gun firmly with two hands and a sturdy stance -- Gun kicks back when triggered.

   ⚠ **CAUTION**: Spray gun metal gets extremely hot when using the burner and can burn you on contact. Never touch the metal screw or any metal parts of the spray gun when the heater is being used. Use only designated grip areas.

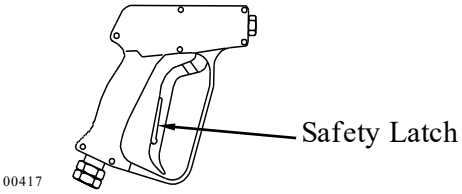

4. Wash from the bottom to the top, using side-to-side motions. This washes away heavy dirt and allows the detergent to soak as you work toward the top.
5. Use the width of the spray pattern to wash a wide path. Overlap spray paths for complete coverage.
6. The nozzle should be 12" to 24" from the work, closer for tough areas.
7. Small parts should be washed in a basket so the pressure does not push them away. Larger, lightweight parts should be clamped down.
8. The pressure washer is set and locked to the maximum rated pressure when it leaves the factory. To reduce the pressure, turn the unloader knob counterclockwise. (See Figure 11 below)

   ⚠ **WARNING**: Do not attempt to alter the unloader valve's maximum pressure. Excess pressure could cause serious injury from escaping high-pressure fluids and/or pump damage. Any alteration other than turning the adjustment knob will void your warranty.

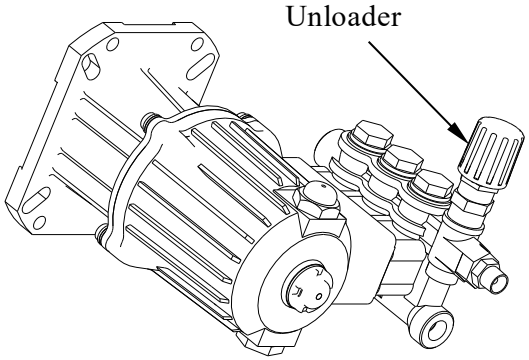

Figure 11

9. If temporarily interrupting spraying, rotate trigger safety latch downward to the locked position to guard against accidental trigger release.
10. Always turn off the engine and activate spray gun trigger to relieve system pressure when:
    - the sprayer is unattended, or
    - disconnecting hoses, installing/cleaning nozzles, or servicing the pump.

⚠ WARNING:
Always turn off the engine and relieve system pressure when finished spraying or when leaving sprayer unattended. Serious injury could result from unintentional release of high-pressure spray.

Step 4. Stopping

Stop the engine using the following steps:

⚠ WARNING:
Never disconnect the high-pressure hose from the pump or spray gun while the system is pressurized. Relieve pressure by squeezing the spray gun trigger after the engine is turned OFF.

1. If the heater was used, turn heat switch OFF and run cold water through the coil for at least 3 minutes while spraying.
2. Turn engine OFF.
3. Turn water supply OFF.
4. *Actuate spray gun trigger to relieve system pressure*.
5. Remove garden hose.
   Remove pressure hose. If chemicals were used, remove quick connect chemical injector from the pressure hose and water outlet.
6. Remove nozzle from spray gun.
7. Turn gasoline line valve to the OFF position.
8. Cool engine at least five minutes before storing – A hot engine is a fire hazard.

Storage

Storage

When you are finished using the pressure washer, you must prepare the sprayer for storage and store it in a proper location. Note:

- **If you will be storing the sprayer in freezing conditions**, follow the instructions for preparing the sprayer for storage in freezing conditions.
- **If you will not be using the sprayer again for 30 days or more**, follow the instructions for preparing the engine for long-term storage.

⚠ WARNING

- **Fuel and its vapors can ignite and cause a fire.** Select a well-ventilated storage area away from sources of heat, flame, or sparks.
- **A hot engine can ignite flammable materials.** Always let engine cool at least five minutes before storing.

Detailed instructions are provided below.

Choose a storage location	**Choose a storage location that is:** o Clean and dry. o Away from sources of heat, open flames, sparks, or pilot lights, even if the pressure washer's engine and burner fuel tanks are empty. Residual fuel fumes from tank can ignite. o Away from extreme high or low temperatures. Do not store the pressure washer in freezing conditions unless it is prepared as directed below for those conditions.
Perform regular maintenance	**Perform periodic maintenance** as directed in this manual to keep the pressure washer in safe working condition.
Prepare pressure washer for freezing conditions (if needed)	**If you will be storing the pressure washer in freezing temperatures, you must properly prepare the pressure washer to prevent water from freezing in the system.** **⚠ CAUTION**: Do not allow water to freeze in the pressure washer, high pressure hose, or spray gun. Freezing water can cause damage to the equipment and cause the spray gun to fail in the open position. A spray gun that has failed in the open position can whip around and cause personal injury when the pressure washer is started. **Short Term freeze protection: (if storing less than 30 days)** 1. Drain water from the feed tank if applicable. 2. Drain water from the heating coil by extending the high pressure hose straight. Place the end of the hose at a level below the pressure washer. Remove the spray gun from the hose.

	3. Using a wrench, disconnect the plumbing that connects to the heating coil inlet. The water will flow out of the heating coil. This will protect the coil from freeze damage. 4. Open both water inlet ball valves and remove the cap from the water filter. This will drain the pump and water inlet plumbing. **Long Term freeze protection: (if storing more than 30 days)** The RV antifreeze will save the components from freeze damage and keep them lubricated. 1. Fill attached feed tank or a separate bucket with 5 gallons of RV antifreeze. a. If feed tank has been used, drain water from it first. b. If using a bucket, submerge one end of a short garden hose in the bucket and connect the other end to the water supply inlet on the pump.) 2. Disconnect the high pressure hose from the high pressure water outlet. 3. Run the engine (with burner off) until RV antifreeze comes out of the high pressure water outlet. 4. Make sure excess antifreeze is disposed of safely.
Prepare engine for long term storage (if storing more than 30 days)	**First prepare the engine for long term storage if you will not be using the pressure washer again for more than 30 days.** Fuel can become stale when stored over 30 days. Stale fuel causes acid and gum deposits to form in the fuel system which can cause malfunction of the engine. 1. Prepare fuel system for storage: o **Drain all gasoline** from the tank and carburetor. This is most easily accomplished by *running the pressure washer with the high pressure hose* until the engine stops from lack of fuel. **OR** o **Add fuel stabilizer** to the gasoline (following manufacturer's instructions) Fuel stabilizer steps: a. Ensure gas tank is full. b. Add fuel stabilizer to fuel tank. c. *Run pressure washer with high pressure hose* at least 5 minutes after adding stabilizer to allow it to enter the fuel system. d. Shut off engine 2. Lubricate cylinder and piston: a. Disconnect spark plug wire and remove spark plug b. Add one teaspoon oil through spark plug hole c. Place rag over spark plug hole and turn starter (or pull the recoil) a few times to lubricate the combustion chamber. d. Replace spark plug, but do not reconnect the spark plug wire.

Storage

Prepare pressure washer for storage	**Prepare the pressure washer for storage.** 1. Disconnect the battery, remove it from the battery compartment, and store it indoors. 2. Make sure the engine start switch is OFF and fuel valve is OFF. 3. Disconnect the engine spark plug wire if you haven't already done so. 4. Disconnect the high-pressure hose, garden hose, and spray gun.
Move pressure washer to storage location	**Let engine cool for 5 minutes** before moving the pressure washer to its storage location.

Burner Adjustment

Oil Burner Adjustment
(only needed if white exhaust smoke appears)

The oil burner is preset and performance tested at the factory (elevation 1100 feet). Different altitudes may require a one-time initial burner adjustment.

⚠ CAUTION:
If white smoke appears from the burner exhaust vent during start-up or operation, discontinue use and readjust air bands.

Specific steps for burner correction are given below.

Burner Correction

Adjusting the burner will require you to access the burner from underneath the pressure washer while someone else is operating the spray gun.

Detailed instructions:

1. Make sure burner is cool to the touch before attempting to adjust.

   ⚠ WARNING: The burner adjustment procedure requires part of an individual's body to be underneath the pressure washer while it is elevated. Always ensure the pressure washer is securely elevated before working on the burner underneath.

2. Begin operation of the pressure washer and switch on the burner, as instructed in the "Operation" section of the manual. Have someone operate the spray gun so the burner fires.
3. Locate the air intake adjustment band as shown in Figure 13 below.

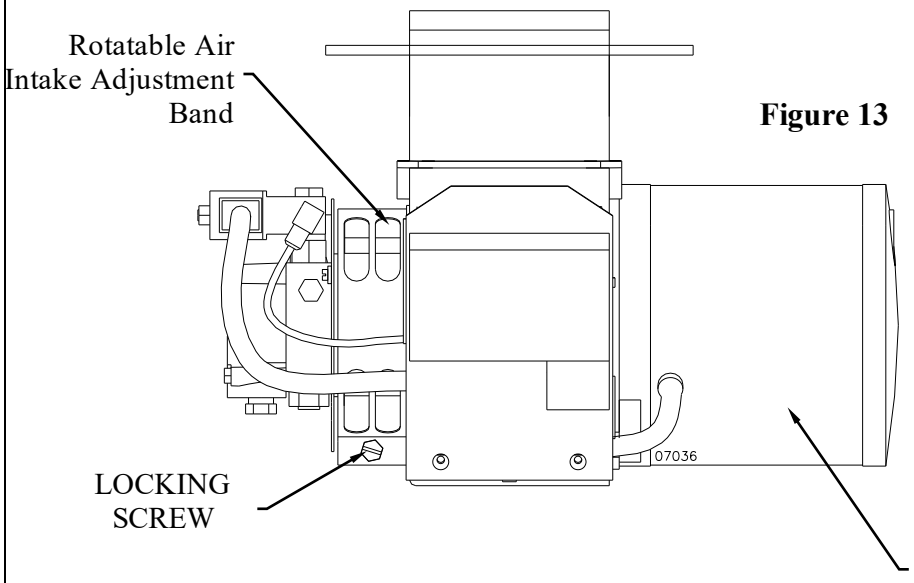

Figure 13

	4. Loosen the locking screw and rotate the air band closed until black smoke appears from the burner exhaust vent. Note the position of the air band. 5. Slowly open the air band until white smoke just starts to appear. 6. Turn air band halfway back to the black smoke position previously noted. Tighten the locking screw.

Maintenance & Repair

Inspect and maintain your pressure washer as specified below in order to keep it in safe and optimal working order. Follow all safety rules and recommended maintenance instructions.

⚠WARNING
ALWAYS shut off water supply, bleed water pressure, turn off engine and disconnect the spark plug before cleaning, adjusting, or servicing the pressure washer. After servicing, make sure all guards and cover shields are replaced before using.

Maintenance Schedule

Item	Frequency
Remove dust/debris accumulation	As needed
Inspect fuel system	Each use
Inspect spray system	Each use
Clean water filter	Each use
Check tire pressure	Each use
Recharge and maintain battery	As specified in Battery Manufacturer's instructions
Perform engine maintenance	As specified in Engine Owner's manual
Change pump oil	• After first 40 hours of use • Every 3 months or 500 hours of use after that
Maintain burner's fuel filter / water separator	• Drain water as needed • Change filter after every 500 hours of use
Descale coil	Annually or more frequently as use and performance require (see instructions)
Inspect and desoot coil if needed	Annually
Inspect/clean/adjust electrodes	Annually

See detailed instructions for each maintenance item below.
(Note: For end-of-the-season storage instructions, see the "Storage" section of this manual.)

Maintenance & Repair-Detailed Instructions

Follow safety rules

Read and follow these safety rules whenever you will be servicing the pressure washer:

- **Turn off / relieve pressure first.** Always turn off pressure washer and relieve system pressure before inspection or maintenance. Remove spark plug or spark plug wire to prevent accidental starting.
- **Fuel valve off.** Turn fuel shut-off valve to OFF position before transporting or servicing the pressure washer.
- **Replace guards.** Make sure all guards and cover shields are replaced after servicing the pressure washer.
- **Major repair.** Major service, including the installation or replacement of parts, should be performed only by a qualified electrical service technician.

	Obtain factory approved parts from Northern Tool Product Support at 1-800-270-0810. • **Replacement parts**. If a part needs replacement, only use factory approved repair parts. Replacement parts that do not meet specifications may result in a safety hazard or poor operation of the pressure washer and will void the warranty.
Keep pressure washer clean	**Keep pressure washer clean.** If dust or debris accumulates on the pressure washer, clean the pressure washer with a damp cloth or soft bristle brush. Do not allow air intakes to become blocked. CAUTION: Do not spray pressure washer with a garden hose or pressure washer. Water may enter the pressure washer and cause damage.
Inspect fuel system(s)	**Inspect the fuel systems (of both engine and burner) and check for leaks before each use.** Do not start pressure washer until all needed repairs have been completed. ⚠ **WARNING:** Fuel leak hazard Gasoline and burner fuel are highly explosive and fuel leaks can result in fire or explosions. You can be burned and seriously injured if the fuel system is not properly hooked up or there is a fuel leak when you start the engine. Inspect the entire fuel system, for both engine and burner. Look for: • signs of leaks or deterioration, • chafed or spongy fuel hose, • loose connections, • loose or missing fuel hose clamps, • damaged fuel tank, or • defective gasoline shut-off valve.
Inspect spray system	**Inspect spray system for damage and leaks before each use.** Do not start pressure washer until all needed repairs have been completed. ⚠ **WARNING**: **High pressure fluid injection hazard** High pressure fluid discharge from leaks (even pin-sized) or ruptured components can pierce skin and inject fluid into the body. Injection injury can result in blood poisoning and/or severe tissue damage leading to infection, gangrene, and possibly amputation. • Never use a finger or skin to check for leaks. • Never operate machine with damaged or missing hoses/parts. • Never attempt to repair a high-pressure hose or component – Always replace it with a part that is rated at or above the pressure rating of this machine. 1) Check hoses, fittings, wand, trigger gun and connections for signs of wear, cracks, looseness, or leaks. Replace as required. 2) Check and clean the nozzle orifice.

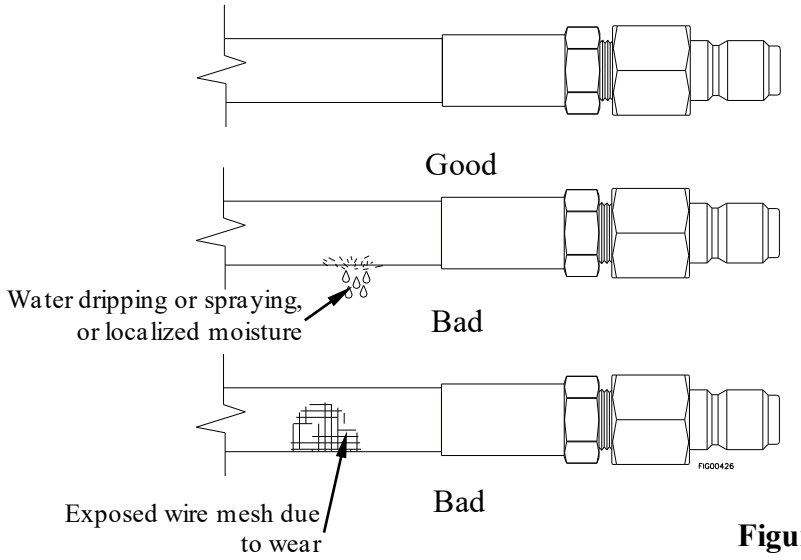

Figure 15

Clean water filter

Clean the water filter before each use.

⚠WARNING:
When cleaning filters, check whether dangerous chemicals have been used with the filter and take any precautions that may be recommended by the manufacturer of these chemicals. Always dispose of hazardous fluids per local, state, and national guidelines.

1) Locate water filter on pump inlet fitting. (See Components section of this manual.)
2) Remove water filter cap.
3) Remove filter screen.
4) Run water through screen to clean.
5) Reassemble.

Check tires/ trailer

Check tires and trailer before each use.

1. Make sure tires are fully inflated and in good repair. See tire sidewall for recommended pressure and fill as needed.
2. Check to make sure that trailer is in safe working condition. Make sure all nuts, bolts, and connections are tight. If a part needs replacement, only use parts that meet the manufacturer's specifications.

⚠WARNING:

- Do not over-inflate tires. Serious injury can occur if tire explodes.
- Damaged or missing components, or replacement parts that do not meet specifications, may result in a safety hazard or poor operation of the trailer.

Recharge and maintain battery	**Inspect, recharge, and maintain battery according to your battery manufacturer's instructions.** Do not store with battery charger always connected. Batteries that are over-charged can boil themselves dry and produce excessive amounts of hydrogen, an explosive gas.
Perform engine maintenance	**Perform engine maintenance as specified in the engine owner's manual.** Engine maintenance items include: 1. Changing oil and oil filter 2. Air filter check/replacement 3. Spark plug cleaning and replacement 4. Fuel filter check/replacement 5. Inspecting and cleaning muffler (and spark arrestor if equipped)
Change pump oil	**Change the pump oil** after the first 40 hours of use, and then after every 3 months or 500 hours of use after that. 1. Open oil drain valve on pump. 2. Drain pump oil into suitable container and dispose of responsibly. 3. Close oil drain valve. 4. Make sure unit is sitting level. Fill pump with 18 oz. of SAE30 non-detergent oil or Cat Pump Oil Item #22158 to middle of sight glass (or at the indicator line on the dip stick if equipped). 5. Replace oil fill cap. 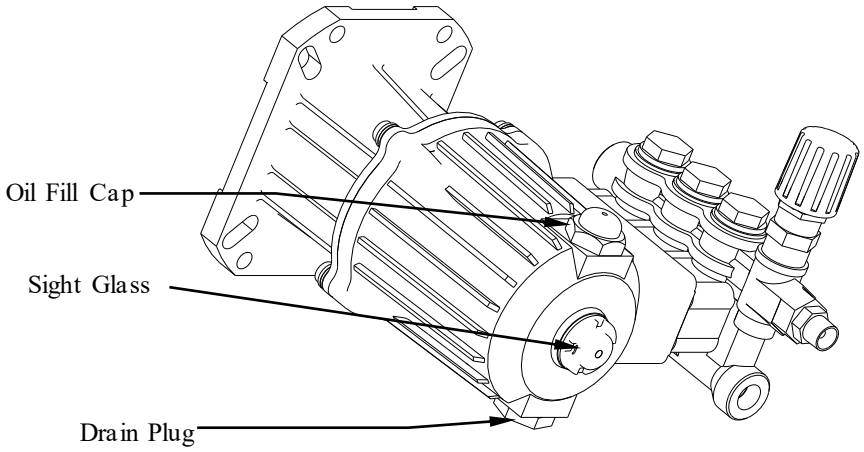 **Figure 16**

Maintain burner's fuel filter/water separator	**Drain water from burner's filter bowl as needed and replace filter after every 500 hours of use or as needed.** 1) After each use of the burner, visually check the filter bowl. If any water has accumulated, drain it via the water drain at the bottom of the bowl. 2) After every 500 hours of operation, empty the burner's fuel tank in order to remove the filter bowl and inspect the fuel filter/water separator. Replace filter as needed. *<u>Important</u>: Always empty the burner's fuel tank before removing the filter bowl. There is no shut-off valve between fuel filter/water separator and burner's fuel tank.* 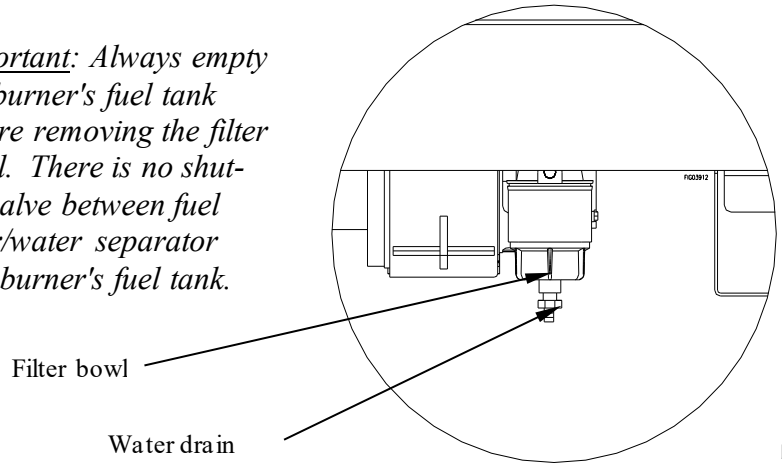 **re 17**
Descale heating coil	**Descale coil tubing annually or more frequently as needed.** In hard water areas, scale can build up inside the heating coil tubing. Scale deposits will decrease the output pressure and temperature of heated spray, and may eventually clog water flow through the heating coil. Descale the coil tubing at least annually and more frequently if you detect a decrease in output pressure or temperature. To descale the coil: 1) Mix a commercial coil cleaner in a 5-gallon bucket and elevate the bucket so it is higher than the unloader. 2) Attach the high-pressure hose(s) to the high-pressure water outlet on the machine. Do not hook up the spray gun. 3) Place the other end of the high-pressure hose(s) in the 5-gallon bucket. 4) Attach a short length of garden hose to the garden hose inlet on the pump. 5) Prime the pump by filling the hose with water, then placing the end of the hose in the bucket. 6) Run the pressure washer in cold mode for 1 to 3 hours, recirculating the cleaning solution. CAUTION: Do not run the burner. 7) Dispose of the cleaning solution where it is not harmful to animals or the environment. 8) Flush with fresh water and clean the inlet strainer when finished.

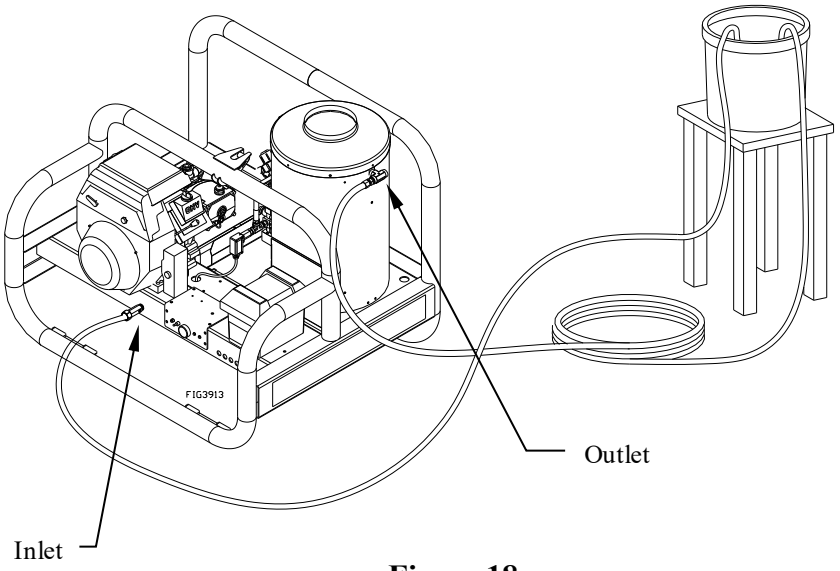

Figure 18

Cleaning Flow Switch

Inspect and clean the flow switch as needed

Mineral build-up and/or debris within the flow switch can occur and may affect burner operation if not periodically cleaned. Mineral build-up and/or debris can stop the movement of the shuttle inside the flow switch body. Shuttle movement is important because the burner will not fire if the shuttle does not move. The shuttle movement actuates a switch inside the flow switch housing which allows the burner to fire during spray mode.

1) Disconnect the swivel fitting from elbow to the inlet of the coil

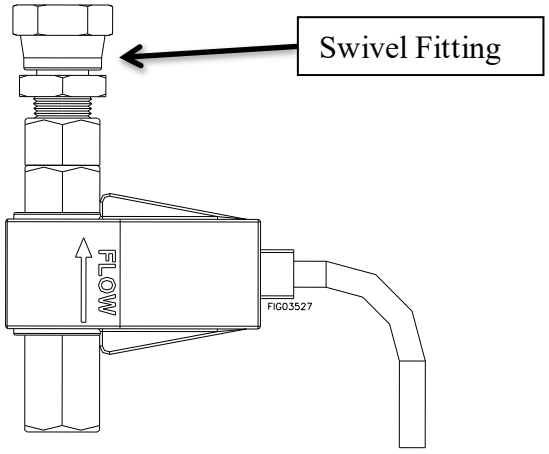

2) Remove the “Cap” fitting from the flow switch.

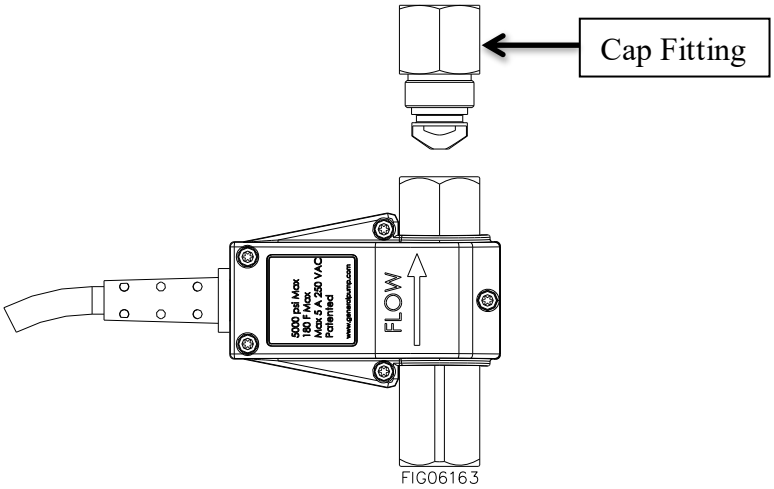

3) Slide out the "Shuttle Assembly". If the magnet in the shuttle assembly is damaged or missing, replace the entire flow switch assembly. To order a replacement flow switch assembly, call Northstar Product Support at **1-800-270-0810.**

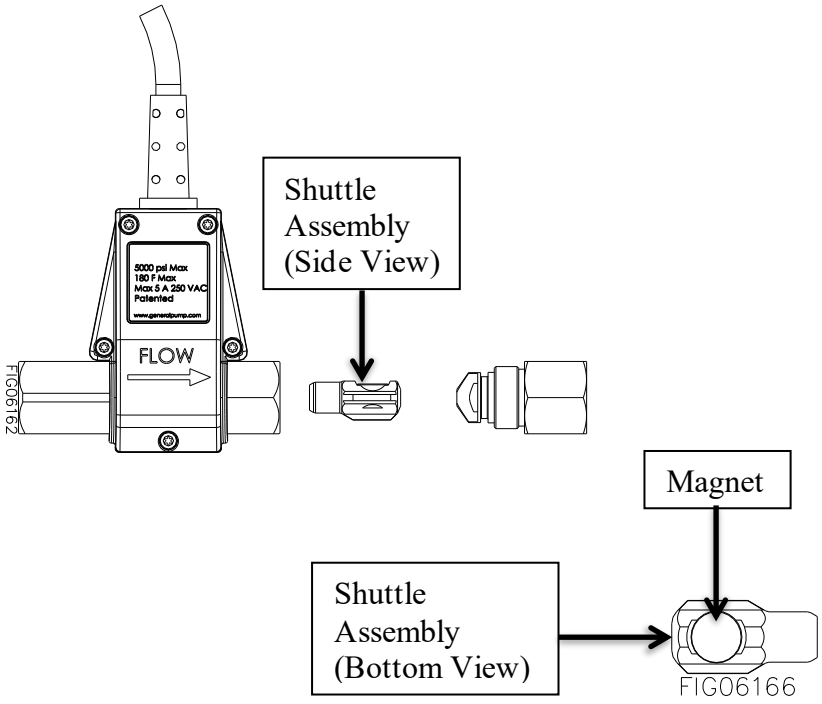

4) Observe the "Shuttle Assembly" and internal portion of "Body" for obstructions, hard water deposits and any other foreign debris. Remove the foreign debris with light scraping or compressed air. If no additional cleaning is required continue to Step 7. If additional cleaning is required continue to step 5.

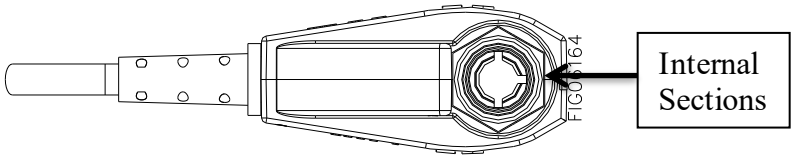

5) Remove the "Body" from the plastic "Enclosure" and soak the "Body" in CLR or similar solution to dislodge excess buildup. The screws (QTY 5) in the "Enclosure" are TORX T10.

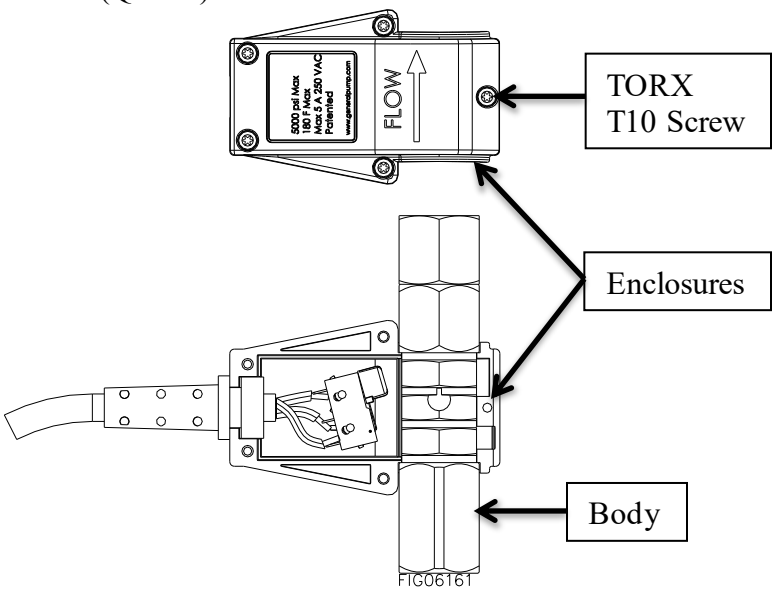

6) Rinse "Body"
7) When cleaning is complete reinstall the "Body" into the "Enclosures", taking care not to cause damage. Tighten the "Screws" into the body until they are snug. Do not over-tighten the screws.

8) Insert the "Shuttle Assembly" with the rounded end first, into the body. Align with grooves.

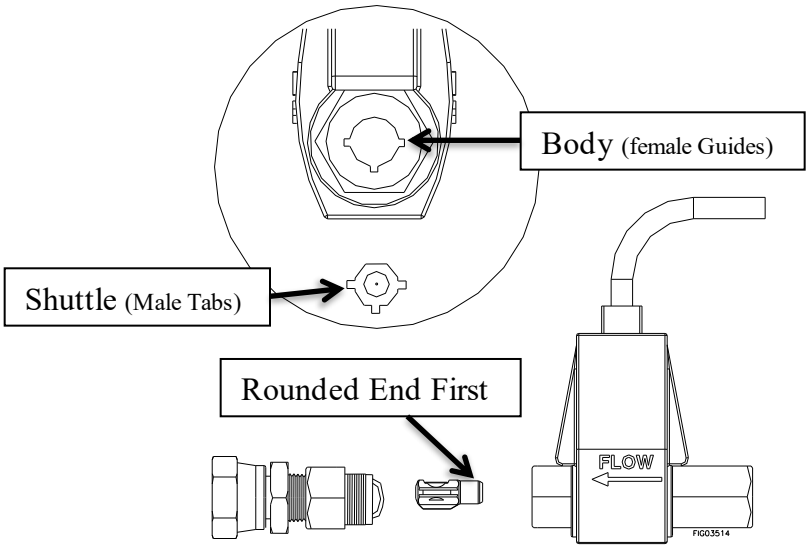

9) Inspect the O-ring on the "Cap", if it is damaged, replace the entire flow switch assembly. To order a replacement flow switch assembly, call Northstar Product Support at **1-800-270-0810.** If the O-ring is not damaged, re-install the "Cap" onto the "Body". Torque the cap to 100lb-in.

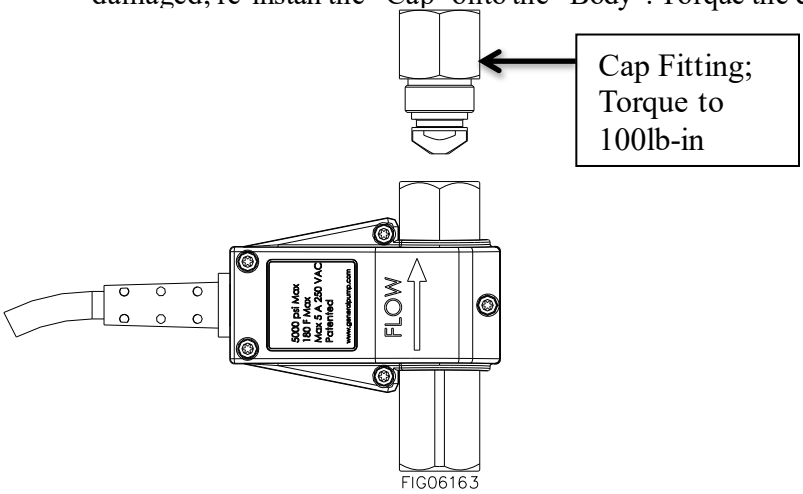

10) On the elbow on the inlet of the coil, remove any remaining thread tape/sealant. Re-apply new thread tape/sealant on the elbow. Re-connect the swivel to the elbow. Hand-tighten the swivel onto the elbow, and once snug, using a wrench continue to tighten the swivel a two additional revolutions.

Inspect heating coil and desoot as needed

Inspect and desoot coil annually.
Most coils never require desooting. However, poor grades of fuel oil or inadequate combustion air will cause heavy soot build-up on the outside surface of the heating coil tubing. These deposits will insulate the coil, which then restricts air flow through the heat exchanger and further aggravates the soot build-up.

If soot has built up on the exterior of the coil tubing, clean as follows:

1) Wear protective clothing, goggles, and gloves.
2) Disconnect high-pressure hose on inlet side of coil and thermostat on outlet side of coil.
3) Remove the lid and insulation lid from the heating chamber and hoist the coil out. Be careful, the coil weighs 125 lbs.
4) Clean the coil.
5) Reassemble the coil and lids to the machine. Make sure the white insulation remains in place.
6) Reattach high-pressure hose and thermostat and make sure all fittings are tight before using the machine.

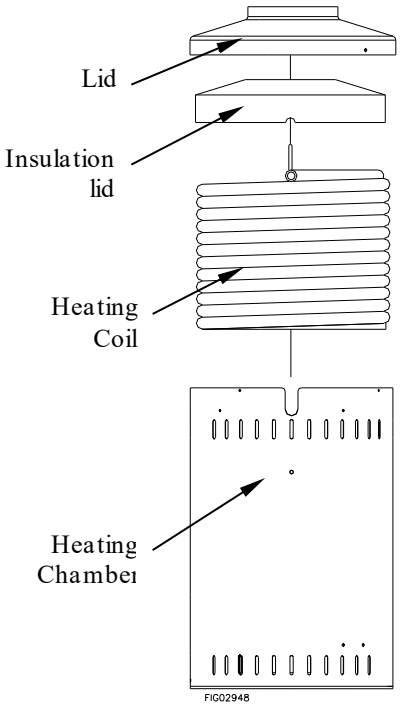

Figure 19

Inspect electrodes

Inspect electrodes yearly and make adjustments as needed.

1) Remove the 4 nuts that attach the burner to the heating chamber. You do not have to disconnect the fuel lines or the electric cords.

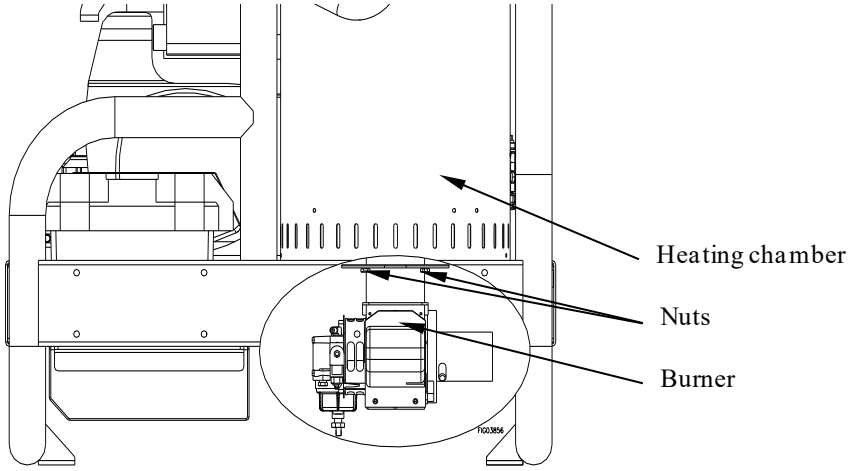

Figure 20

2) Pull the burner out from underneath the heat exchanger.
3) Clean off carbon deposits, which may have accumulated on the tips of the electrodes.
4) Reset the spacing as shown below in Figure 21.

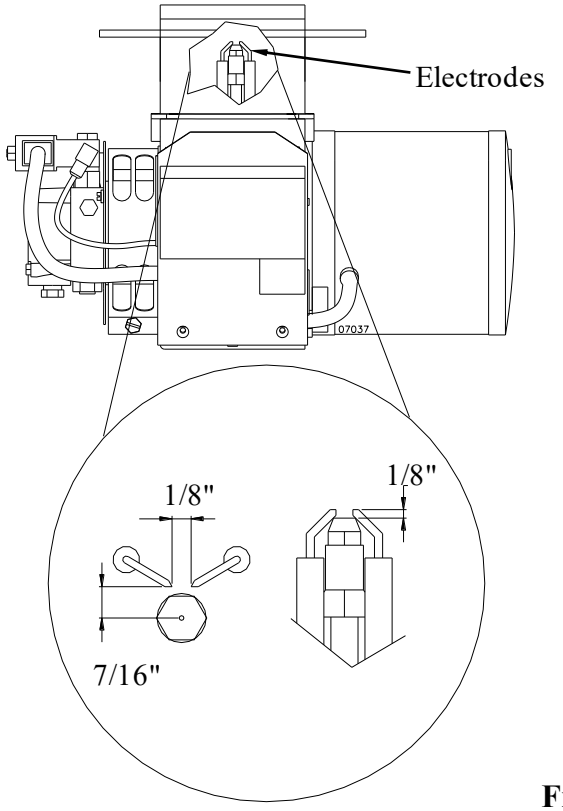

Figure 21

NOTE TO COMMERCIAL USERS:

All mechanical equipment, no matter how well designed, will need maintenance and repairs. A Northstar pressure washer is no exception. At times, a Northstar pressure washer may become inoperable because repairs are required. Northstar Product Support will assist in these repairs as needed, but if an inoperable pressure washer creates a major expense to your business, then we strongly recommend the following:

- Have a staff person become familiar with the mechanical operation of the pressure washer and capable of making minor repairs and performing all preventative maintenance procedures.
- Keep a stock of recommended service parts for maintenance and minor repairs.

IMPORTANT:
If a part needs replacement, only use parts that meet the manufacturer's part number specifications. Replacement parts that do not meet specifications may result in a safety hazard or poor operation of the pressure washer.

Contact NorthStar Product Support at 1-800-270-0810 for any questions, problems, or parts orders.

Troubleshooting

Engine Will Not Start	
Causes	***Solutions***
Low Oil Shutdown	Fill engine with the adequate amount of oil.
Cold Engine	Choke engine to start.
No Fuel	Add gas to engine, make sure fuel shutoff valve is open.
Dead Battery	Recharge/Replace battery.
Spark plug wire not attached	Attach spark plug wire to spark plug.

Pressure Washer Runs But Burner Doesn't Fire	
Causes	***Solutions***
Heat switch turned OFF	Turn heat switch ON.
Thermostat set too low or off	Set thermostat to desired temp.
Fuel tank empty	Fill fuel tank with kerosene, diesel, or fuel oil.
Defective Pressure Switch	Call Product Support.
Defective Burner	Call Product Support.

Pressure Washer Runs But No Pressure	
Causes	***Solutions***
Partially clogged or damaged nozzle	Clean or replace nozzle.
Clogged water filter	Clean water filter.
Low water flow	Make sure the water supply is more than 4 gpm.

Pressure Washer Surges Or Cycles While In Bypass	
Causes	***Solutions***
Leak between unloader and gun.	Check all connections between unloader and gun for leaks. Tighten loose components and replace damaged components.
Gun leaking internally	Replace spray gun.

Smoke From Heat Exchanger	
Causes	***Solutions***
Air band not adjusted properly	Adjust the air band until the burner burns cleanly. See *Installation Instructions*
Poor quality fuel	Use kerosene for the cleanest burn.

Water Not Heating Sufficiently	
Causes	***Solutions***
Scale build-up in coil	See *Coil Descaling* under *Maintenance Instructions.*
Coil is full of soot	See *Coil Desooting* under *Maintenance Instructions.*

Poor Or No Detergent Supply	
Causes	***Solutions***
Soap control knob set too low.	Adjust soap control knob.
Inadequate detergent supply	Refill detergent container. Make sure chemical strainer is fully submerged.
High pressure hose too long	Use less hose. Move machine closer to the work.
Chemical strainer or injector clogged	Clean the strainer and injector. Always start with a clean detergent container. Run clean water through the injector after each use.

Any Questions, Comments, Problems, or Parts Orders
Call NorthStar Product Support 1-800-270-0810

Parts Explosion 157595 – Rev BY

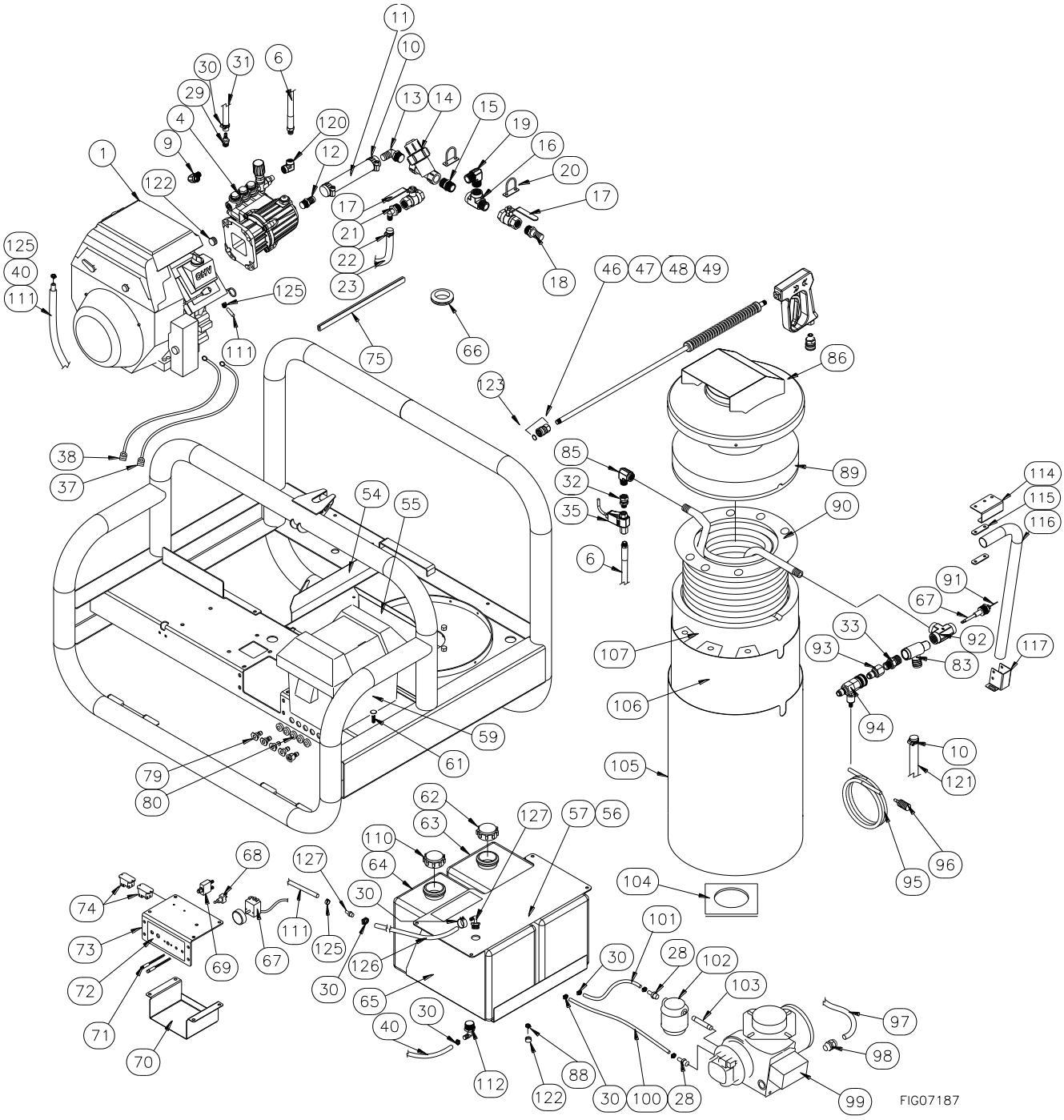

Parts Explosion 157595 – Rev BY

REF	PART #	DESCRIPTION	QTY
1	783394	Honda engine 18hp	1
	783396	Honda muffler kit	
3	777837	3/8" NPT plug	1
4	805141	CAT pump, 4gpm	1
6	777378	Hose, 18" HP	1
9	777410	Elbow 3/8" NPT MxF	1
10	17141	Hose clamp 3/4 hose	5
11	805636	Hose, 3/4" ID PVC – 11.5"	1
12	782706	1/2" NPT X 3/4" HB Steel- AS	1
13	50NBR12	HB elbow 3/4"NPT M x 3/4" hose	1
14	797209	Strainer, 3/4" Y-Line	1
15	780413	Nipple 3/4" NPT x 3/4" NPT MxM	1
16	39206	Tee 3/4" NPT MxFxF	1
17	35442	Ball valve 3/4" NPT FxF	2
18	5023	Hose barb 3/4" NPT x 3/4" hose	1
19	35443	Elbow 3/4" NPT x 3/4" NPT MxM	1
20	82220	U-bolt	2
21	778829	Elbow 3/4" NPT M x 1/2" HB	1
22	17141	3/4" Hose clamp	2
23	806580	Hose, 3/4" ID PVC Suction – 60 IN	1
28	777340	Hose barb 1/4" NPT M x 1/4" hose	2
29	801964	Easy start valve, 3/8" NPT M	1
30	777834	Hose clamp 1/4" hose	7
31	805556	Clear PVC hose, 1/4" – 24 IN	1
32	38379	Swivel, 3/8 MPT x ½ FPT	1
33	777337	Nipple 1/2" NPT x 3/8" NPT MxM	1
35	797121	Flow switch	1
37	777667	Battery cable, black	1
38	777668	Battery cable, red	1
39	31881	Reflective sleeve	14"
40	801490	Hose, 1/4" fuel line	18"
42	777410	Elbow, 3/8" street	2
45	777836	Thermal protector, 1/2" NPT	1
47	791279	Spray lance	1
48	779165	Spray gun with Lance	1
54	777488	Heat shield, tanks	1
56	806504	Tank clamp	1
57	777666	Decal, gasoline only	1
59	777647	Battery box	1
60	-	-	-
61	82090	Carriage bolt, 5/16" threads	2
62	KEL204846	Cap, fuel tank	1
63	791573	Tank, Diesel	1
64	791585	Gasoline tank	1
65	806505	Tank support	1
66	792433	Grommet 1"	2
67	790561	Thermostat	1

REF	PART #	DESCRIPTION	QTY
68	777855	Toggle switch	1
69	31085	Circuit breaker, 20A	1
70	777644	Control box cover	1
71	777646	Red LED, 12VDC	2
72	777660	Decal, control panel	1
73	777643	Control box panel	1
74	791375	Relay 12VDC	2
75	792432	Trim-Loc 1/16"	1'
79	778946	Nozzle 0 degree #4, red	1
	25309	Nozzle 15 degree #4, yellow	1
	778948	Nozzle 25 degree #4, green	1
	778947	Nozzle 45 degree #4, white	1
	803853	Nozzle, chemical, black	1
80	777111	Grommet, nozzles	5
81	-	-	-
83	794071	Rupture Disc-8500#, Kit	1
85	5027	Elbow, 1/2" NPT MxF	1
86	35331	Lid Heat Exchan	1
88	777119	½" hose clamp	1
89	38398	Insulation, cap	1
90	790017	Heating coil	1
91	30501	Split loom	24"
92	305208	Tee 1/2" NPT FxFxF	1
93	777915	Quick couple nipple, 3/8" NPT F	1
94	779614	Injector, quick couple	1
95	805558	Clear PVC hose, 1/4" – 48 IN	1
96	221222	Strainer, chemical hose	1
97	787130	Wire harness, burner	1
98	22502	Strain relief	1
99	792322	Burner, ADC - 12 Volt	1
100	801490	Hose, 1/4" fuel line	22"
101	801490	Hose, 1/4" fuel line	15.5"
102	799864	Filter, Fuel/water separator	1
103	305239	Nipple 1/4" NPT MxM 3" long	1
104	38120	Insulation gasket	1
105	803575	Outer wrap	1
106	779232	Fire chamber	1
107	33387	Insulation, can	1
110	784769	Sealed fuel cap	1
111	801491	3/8" fuel line hose	27"
112	783212	1/4" MPT hose barb elbow	1
114	785937	Bracket, thermostat guard	1
115	785928	Tie plate, thermostat guard	2
116	785941	Metal tube, thermostat guard	1
117	785949	Tube clamp, thermostat guard	1
120	798262	Elbow, 3/8 FPT X 3/8 FPT	1
121	793836	3/4" Hose	1
122	777838	1/4" NPT Plug	1
123	796379	1/4" Coupler O-ring	1
125	30746	3/8" Hose clamp	3
126	801490	Hose, Fuel line, 1/4"	30"
127	806530	Elbow, 1/4"MPT X 3/8"HB	1

Parts Explosion 157595 – Rev BY

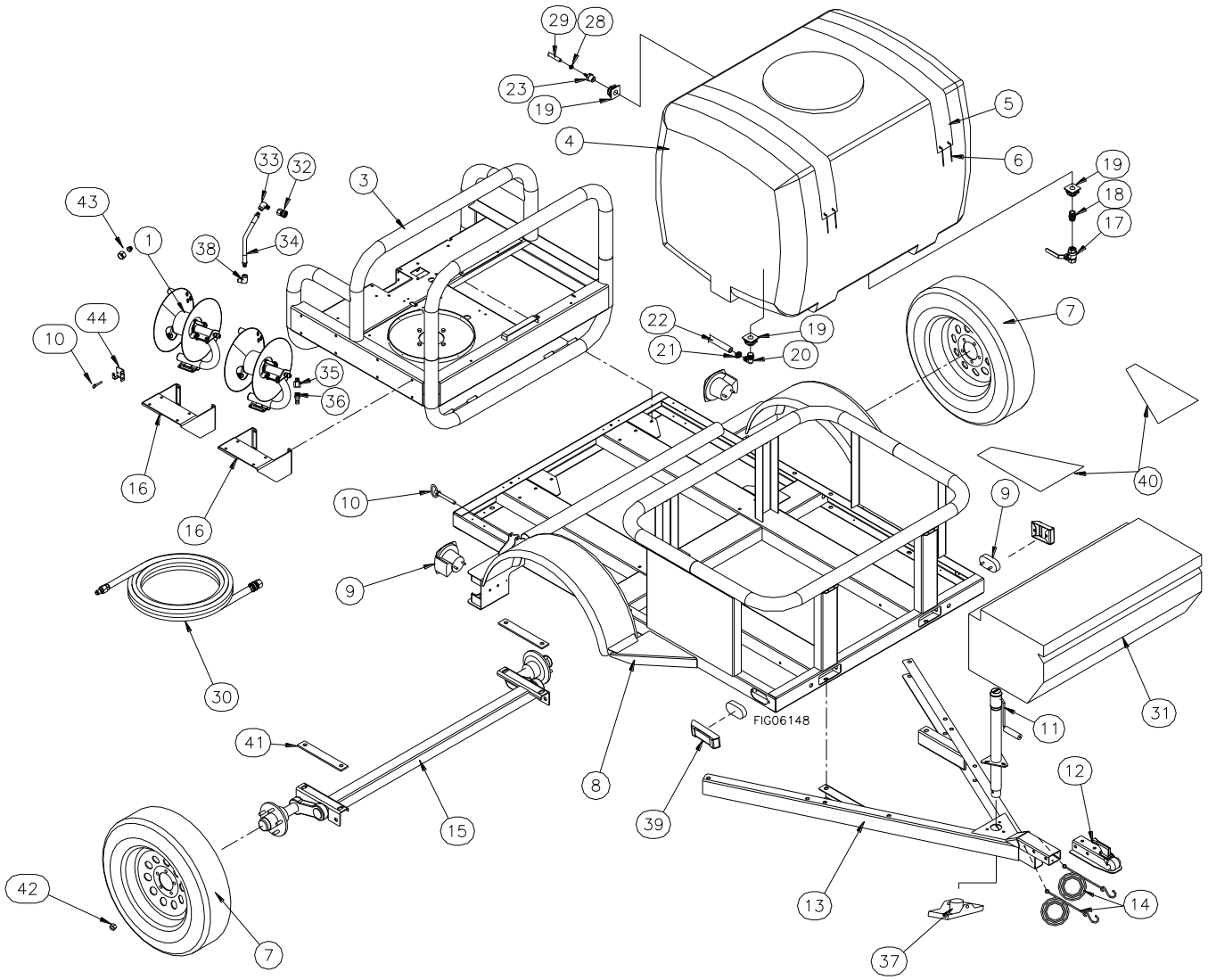

Parts Explosion 157595 – Rev BY

REF	PART #	DESCRIPTION	QTY
1	806509	Hose Reel	2
3	802342	Frame, Skid	1
4	796782	200 Gal Tank Assembly (includes item 20)	1
5	777707	Tank Strap	2
6	82080	1/4" Eye Bolt	4
7	780200	15" Wheel	2
8	806244	Trailer Frame	1
9	789590	Trailer Light Kit (rear, front, wires)	1
10	806609	Pin	1
11	796875	Jack	1
12	777775	Coupler	1
13	796668	A-frame Tow bar	1
14	779542	Safety Cables	2
15	39166	Axle	1
16	779782	Hose Reel Mount	2
17	35442	Ball Valve	1
18	5318	Nipple 3/4" NPT x 3/4" HB	1
19	5370	Bulkhead 3/4" NPT Female	3
20	50NBR12	1/2" HB x 3/4" NPT Elbow	1
21	17141	3/4" Hose Clamp	1
22	806579	Hose, 3/4" ID PVC – 46 IN	1

REF	PART #	DESCRIPTION	QTY
23	799839	¾" NPT x ¼" HB Nylon HB	1
28	777834	1/4" Hose Clamp	1
29	805556	1/4" Clear PVC Hose – 24 IN	1
30	805912	Hose, 3/8" x 100' gray 6000psi	1
31	806247	Toolbox w/ holes	1
-	By Key Code	Replacement Keys (2)	1
-	AFP200477-203	Replacement Pull Handle Latch w/ Key (1)	1
-	AFP201210	Replacement Lid Shock	1
32	777914	QC 3/8" Female Coupling	1
33	777410	3/8" Street Elbow	1
34	777378	18", 3/8" 5400 PSI Gray Hose	1
35	806556	3/8" FPT x 1/2" FPT elbow	1
36	782706	1/2" NPT x 3/4" HB Steel	1
37	796876	Jack Plate	1
38	798262	3/8" NPT elbow fitting	1
39	789659	Side Marker Cover	2
40	806243	Toolbox mounting insert	1
41	797690	Axle Spacer	2
42	798024	Lug Nut, Dexter Axels	10
43	800429	Garden Hose Adapter	1
44	806607	Gun holder bracket	1

Pump Explosion – Rev BY

EXPLODED VIEW

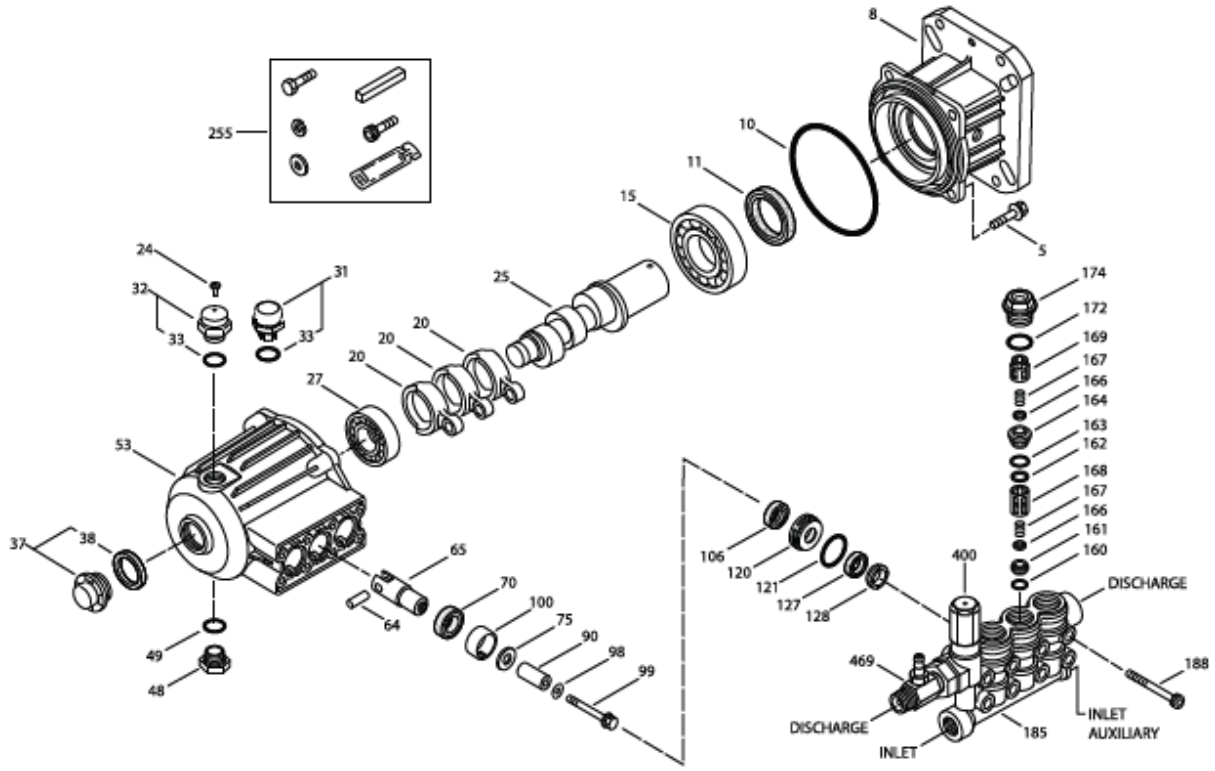

PARTS LIST

ITEM	P/N	MATL	DESCRIPTION	QTY
5	127285	STCP R	Screw, HH, Sems (M8 x 25)	4
8	49361	AL	Cover, Adapter Bearing	1
10	14043	NBR	O-Ring, Bearing Cover	1
11	125351	NBR	Seal, Oil Crankshaft	1
15	146421	STL	Bearing, Ball–Inner	1
20	49364	TNM	Rod, Connecting	3
24	549608	LDPE	Plug, Oil Cap	1
25	49391	CM	Crankshaft (10.3mm)	1
27	49363	STL	Bearing, Ball–Outer	1
31	*549726*	—	*Cap, Vented with O-Ring (Rain Cap)*	*1*
32	547961	RTP	Cap, Oil Filler with O-Ring	1
33	14179	NBR	O-Ring, Filler Cap–70D	1
37	92241	PC	Gauge, Oil Bubble with Gasket–80D	1
38	44428	NBR	Gasket, Flat, Oil Gauge–80D	1
48	44842	NY	Plug, Drain	1
49	14179	NBR	O-Ring, Drain Plug–70D	1
53	49352	AL	Crankcase	1
64	49366	CM	Pin, Crosshead	3
65	49368	BB	Rod, Plunger	3
70	47215	NBR	Seal, Oil Crankcase	3
75	49370	S	Slinger, Barrier	3
90	49367	CC	Plunger (M14 x 28)	3
98	46730	NBR	Washer, Seal–90D	3
99	49369	S	Retainer, Plunger (See Tech Bulletin 074)	3
100	49371	NY	Retainer, Seal	3

ITEM	P/N	MATL	DESCRIPTION	QTY
106	45188	NBR	Seal, LPS with S-Spring	3
120	49374	BB	Case, Seal	3
121	13977	NBR	O-Ring, Seal Case–70D	3
127	49606	PTFE	V-Packing (Black)	3
128	49605	D	Adapter, Male	3
160	26129	NBR	O-Ring, Inlet Valve Seat–70D	3
161	49378	S	Seat, Inlet	3
162	48361	D	Backup Ring, Discharge Seat	3
163	43358	NBR	O-Ring, Discharge Seat–70D	3
164	49376	S	Seat, Discharge	3
166	547098	S	Valve	6
167	49354	S	Spring	6
168	49377	PVDF	Retainer, Spring, Inlet	3
169	547441	PVDF	Retainer, Spring, Discharge	3
172	49382	NBR	O-Ring, Valve Plug–90D	3
174	49380	BB	Plug, Valve (See Tech Bulletin 074)	3
185	49372	BB	Head, Manifold	1
188	126512	STCP R	Screw, HSH (M8 x 65) (See Tech Bulletin 074)	8
197	*941517*	*BB*	*Assembly, GH [½" NPT(M) x ¾" GH(F)]*	*1*
255	31445	STZP	Assembly, Bolt Mount, Gas	1
300	*76262*	*NBR*	*Kit, Seal (Includes: 98, 106, 121, 127, 128)*	*1*
310	*76260*	*NBR*	*Kit, Valve Pre-Assembled (Includes: 160–164, 166, 167, 168, 169, 172)*	*1*
400	—	—	Unloader, Integral (See Individual Parts)	1
469	7367	BB	Injector, Chemical Fixed	1

Italics are optional items. R Components comply with RoHS Directive.

MATERIAL CODES (Not Part of Part Number): AL=Aluminum BB=Brass CC=Ceramic CM-Chrome-moly D=Acetal LDPE=Low Density Polyethylene NBR=Medium Nitrile (Buna-N) NY=Nylon PC=Poly Carbonate PTFE=Pure Polytetrafluoroethylene PVDF=Polyvinylidene Fluoride RTP=Reinforced Composite S=304SS STCP=Steel/Chrome Plated STL=Steel STZP=Steel/Zinc Plated TNM=Special High Strength

Burner Explosion – Rev BY

546-031BDC BURNER PARTS LIST		
ITEM	PART NUMBER	DESCRIPTION
1	31635-049	TUBE/HOUS-20614/4A8/3.75"/.88"I
2	21874-001	TUBE/FLANGE-(20614)
3	21866-007	HOUSING,FAN-M DRILLING
4	21993-008	MOTOR,13.5 VDC
5	100761-001	SIDEPLATE, HOUSING-MSR 12VDC
6	14160-008	CONE,AIR-#4A8 (8 HOLE OUTER RNG)
7	20601-002	BAND, AIR INNER-MOD M
8	20602-002	BAND, AIR OUTER 8-HOLE MOD-M
9	23021-001	FAN-3.44"W X 4.25"D M 5/16" BORE
10	101119-001	COUPLING-M FASCO 12VDC
11	101128-011	PUMP-S A2VA3006-N261 12V COMBO
12	550053	FITTING,ELBOW 90* STREET 1/8
13	18766	PLUG, PIPE HXHD 1/8" NPT W/PATCH
14	101274-001	TEE,STREET-1/8 X 1/8 BRASS
15	14222	CONNECTOR, MALE-3/16" X 1/8"IPT
16	30537-021	GUN-RG/*CST/*1 1/4"BB/2.00 90*A
17	101439-SERM	KIT-12VDC M-PLT NO TMR/CAD
18	100732-001	SPRING,CONTACY-COILED
19	14451-EZK	OIL LINE ASM.-6"
20	101412-005	CONNECTOR,PUSH WIRE-5 WIRE
21	101412-003	CONNECTOR,PUSH WIRE-3 WIRE
22	101412-002	CONNECTOR,PUSH WIRE-2 WIRE
23	12484	GASKET, FLANGE-STD LARGE

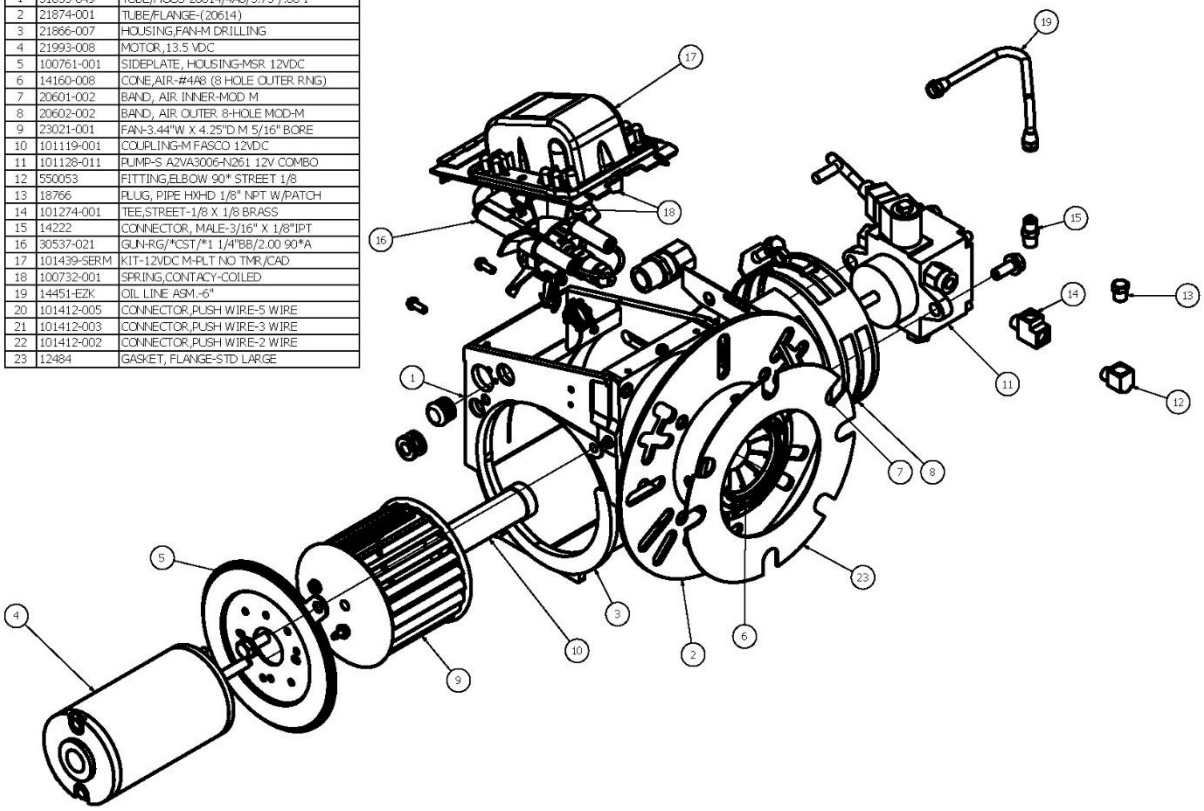

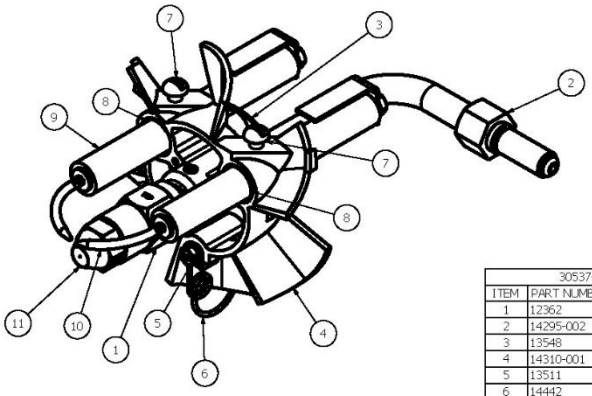

30537-021 GUN ASSEMBLY PARTS LIST		
ITEM	PART NUMBER	DESCRIPTION
1	12362	ADAPTOR, NOZZLE-STD/SERVICE
2	14295-002	FITTING, GUN ASM.-OIL PIPE BRASS
3	13548	DISC,STATIC-2" DIA PERFORATED
4	14310-001	STABILIZER,ELECTRODE-(MACH)
5	13511	SCREW, HXSLTCSR 8-32 X .312
6	14442	SPRING,ELECTRODE SUPPORT
7	12694	SCREW,RDSL 10-24 X .375"
8	12408	BUSHING,ELECTRODE INSULATOR
9	100772-001	ELECTRODE ASM-RH REV 1 1/4"BB
10	100773-001	ELECTRODE ASM-LH REV 1 1/4" BB
11	14457-200	NOZZLE-DEL 2.00 90* A

Wiring Diagram – Rev BY

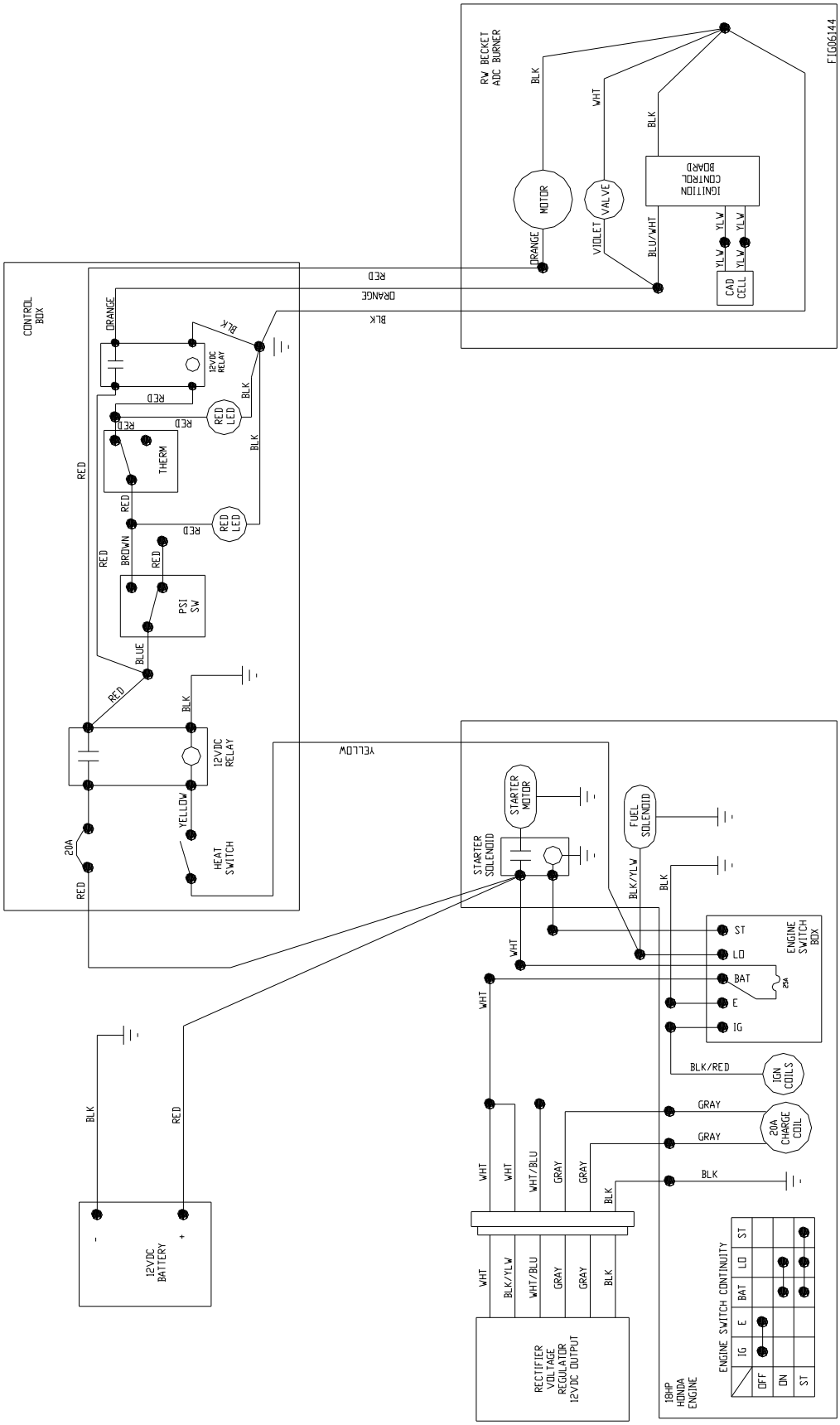

Summary of Important Safety Information

This section provides a summary of the various safety procedures and measures that have been presented throughout the manual. Keep this summary handy and refer to it to refresh your memory about how to safely use your pressure washer.

⚠ WARNING

Carefully read and understand the following safety information before using the pressure washer. Improper use or maintenance of the pressure washer can result in ***serious injury or death*** to the operator or bystanders from:

- ***Carbon monoxide poisoning***
- ***Skin/eye injury from high pressure spray***
- ***Fire/explosion***
- ***Burns***
- ***Electric shock***
- ***Chemical exposure***
- ***Slips/falls***
- ***Flying objects/debris***

General

- **Read all instructions.** Read and understand this Owner's Manual and the engine Owner's Manual completely before attempting to set-up and use the pressure washer. Serious injury or death can result if safety and other instructions are not followed.
- **Instruct all operators**. The pressure washer's owner must instruct all operators and potential renters in safe pressure washer set-up and operation. Do not allow anyone to operate the pressure washer who has not read the Owner's Manual and been instructed on its safe use. Owner's Manuals are available from North Star at 1-800-270-0810.
- **Adult control only.** Only trained adults should set up and operate the pressure washer. Do not let children operate. Pressure washers can generate forces greater than children can control and require judgment beyond what can be expected of children.
- **Under the influence**. Never operate, or let anyone else operate, the pressure washer while fatigued or under the influence of alcohol, drugs, or medication.
- **Understand intended use**. Carefully read about and understand the intended use of this pressure washer. Do not use for other purposes, as unforeseen hazards or equipment damage may result.

Prohibition Against Modifications

Never modify or alter the pressure washer in any way, or deactivate any safety device. Modifications can create serious safety hazards and will also void the warranty.

- **Fuel/exhaust system**. Never add to or modify the exhaust system, fuel tank, or fuel lines. Carbon monoxide poisoning, fuel leaks, fire or explosion could result.
- **Unloader valve**. Do not attempt to alter the unloader valve's maximum pressure. Excess pressure could cause serious injury from escaping high-pressure fluids and/or pump damage. Any alteration other than turning the adjustment knob will void your warranty.
- **Guards**. Do not operate pressure washer unless all guards and cover shields are in place.

Safety – Installation & Set-up

Battery Safety

Batteries are hazardous because they contain caustic acid, can emit explosive gases, and can cause electric shock. *Caution must be exercised when making connections to a battery to avoid shock and contact with the acid, and to prevent any sparking that could lead to an explosion.* Follow these and other safety rules carefully when connecting battery to pressure washer:

- **Eye/skin protection.** Always wear eye protection and protective clothing when connecting or disconnecting battery.
- **Sparks/Smoking.** Never smoke or work near sparks or other sources of ignition.
- **Electric shock.** Never touch both battery terminals at the same time with your hand or any non-insulated tools.
- **Connection/disconnection sequence.** ALWAYS connect and disconnect cables to the correct battery terminals in the proper sequence:
  - When CONNECTING the battery, connect the RED cable to the POSITIVE terminal FIRST.
  - When DISCONNECTING the battery, disconnect the BLACK cable from the NEGATIVE terminal FIRST
- **Acid/skin contact.** If battery acid contacts skin or clothing, flush immediately with water and neutralize with baking soda.

Summary of Important Safety Information

Installation / Initial Set-up

- **Level, heat-resistant surface**. Situate pressure washer on a firm, level, and heat-resistant surface with good drainage. Ensure it sits level and will not slide or shift during operation. Block wheels to prevent movement.
- **Prevent carbon monoxide poisoning – Use outside only!** Exhaust fumes from both the engine and the burner contain carbon monoxide (CO), a poisonous gas you cannot see, smell, or taste. The CO generated by the pressure washer can rapidly accumulate, even in areas that appear to be well ventilated, resulting in dangerous and fatal concentrations within minutes. To prevent dangerous CO build-up:
  - ONLY use pressure washer outdoors and at least 20 feet from the home, away from windows, vents and air intakes, to allow proper ventilation. If you start to feel sick, dizzy, or weak while using the pressure washer, shut off the engine and get to fresh air RIGHT AWAY.
  - NEVER run pressure washer in an enclosed or partially enclosed location such as a building, garage, shed, or vehicle. Running a fan or opening windows will not provide adequate ventilation to prevent dangerous CO build-up.
- **Adequate ventilation**. The pressure washer needs adequate, unobstructed flow of air to allow for proper combustion and cooling. Situate so there is adequate clearance around pressure washer to allow for airflow – at least 7' from any non-combustible wall or obstruction. Never place any objects against or on top of pressure washer.
- **CO alarms**. Ensure that working, battery-operated or battery back-up carbon monoxide alarms are used in any dwelling/structure that is in close proximity to the running pressure washer.
- **Hot exhaust - fires**. Exhausts from engine and burner can be extremely hot and cause fire. Position sprayer so engine and burner exhausts are at least 7' away from combustible objects during operation.
- **Spark arrestor usage**. Equip engine with a spark arrestor if pressure washer will be used near any ignitable forest, brush, or grassy land. See the "Specifications" section of this manual to determine if your pressure washer is already equipped. In such conditions, make sure you comply with applicable local, state and federal codes.

Fuel Safety

Gasoline is highly flammable and explosive; and burner fuels are combustible at warm temperatures. You can be burned or seriously injured when handling fuel. Using extreme care when handling fuel, including these preventative measures:

- **Fuel outdoors**. Fill fuel tank outdoors – never indoors. Fuel vapors can ignite if they collect inside an enclosure. Explosion can result.
- **Use approved container**. Never pump fuel directly into fuel tank at gas station. Static charge can build and ignite fuel. Use an UL approved fuel container to transfer fuel to the engine.
- **Running / hot engine**. A hot engine or burner is hot enough to ignite fuel. Never add fuel or remove fuel cap if engine or burner are running or still hot. Allow engine to cool at least two minutes before adding fuel.
- **Heat / flames / sparks**. Stay away from sources of heat, flame, or sparks while adding fuel.
- **Don't overfill**. DO NOT overfill the fuel tank. Allow at least 1/2" of empty space below the fill neck to allow for fuel expansion.
- **Replace cap**. Replace fuel cap securely before starting engine.
- **Spills**. Clean up fuel spills immediately. Move pressure washer away from spilled fuel on the ground. Wipe fuel off engine and wait 5 minutes for excess fuel to evaporate before starting engine. Fuel soaked rags should be disposed of properly.
- **On skin / clothes**. If fuel is spilled on your skin or clothes, change clothes and wash skin immediately.
- **Inspect fuel system**. Check fuel tanks and fuel system on a regular basis. Look for signs of leaks, deterioration, chafed or spongy fuel hose, loose or missing fuel hose clamps, damaged fuel tank, or a defective fuel shut-off valve. Do not start pressure washer until needed repairs have been completed.
- **Fuel storage**. Store fuel in a cool, dry place in an UL-approved, tightly sealed container.

Safety – Towing

- **Maintain trailer for safe operation.** Follow all instructions to make sure the trailer is in good working order and tires are fully inflated in order to prevent loss of control while towing.
- **Hitch trailer properly.** Follow all instructions for hitching trailer to towing vehicle. Make sure hitched trailer sits level
- **Jack.** Keep jack cranked down to help balance the trailer when it is not connected to a vehicle hitch. Crank jack up before towing.
- **Read vehicle instructions**. Review towing safety instructions in your towing vehicle manual.
- **Driving skills.** Special attention and driving skills are needed for towing any type of trailer.

Summary of Important Safety Information

- **Vehicle handling.** Be aware that vehicle handling will be affected when towing the filled pressure washer. Exercise caution to avoid loss of control or pressure washer overturning:
  - **Keep speed to a minimum** so you can maintain control at all times. Reduce speed prior to turns.
  - **Allow for wider turns** and for **more distance to stop**.
  - **Avoid any sudden** steering maneuvers, starts, or stops that could create sway.
- **Rough or sloped terrain**. Slow down and exercise extra caution on rough or sloped terrain in order to reduce risk of rollover. Pick the most level route possible when transporting across fields. Drive up and down slopes that cannot be avoided, rather than across. Use a vehicle equipped with a Roll Over Protection System (ROPS) if you will be operating on non-level terrain.
- **Added length**. Be aware of the added length of the pressure washer.
- **Reduced visibility.** Be aware that visibility may be reduced with pressure washer attached. Be extra cautious when backing up or turning.
- **Ride / transport.** Never ride or transport cargo on the pressure washer.
- **On public roads.** If towing on a public road, make sure to comply with all local, state, and federal towing requirements. It is the sole responsibility of the purchaser to obtain licensing, trailer lights, safety chains or signage as needed to comply.
- **Under the influence**. Never tow or operate this pressure washer while under the influence of alcohol, drugs, or medication.

Safety – Operation

Pre-start

- **Review safety rules**. Before each use of this pressure washer, review the "Rules for Safe Operation." Failure to follow these rules may result in serious injury or death.
- **Know how to stop.** Be thoroughly familiar with proper use of the equipment and all controls and connections. Know how to stop the pressure washer and relieve system pressure quickly if needed.
- **Danger: High-pressure fluid injection hazard**. High-pressure fluid spray or discharge from leaks (even pin-sized) or ruptured components can pierce the skin and inject fluid into the body. Injection injury can result in blood poisoning and/or severe tissue damage leading to infection, gangrene and possibly amputation.
- **Check/maintain machine before each use.** Check hoses & fittings for damage and leaks before use. Ensure all components are properly connected. Follow all maintenance instructions specified in pressure washer and engine manuals.
  - Never operate machine with damaged or missing hoses/parts. Never attempt to repair a high-pressure hose or component. Always replace it with a part that is rated at or above the pressure rating of this machine.
  - Never run the machine without sufficient lubrication or sufficient water to cool the pump.
  - Never operate unless all safety guards are in place.
- **Position safely**. Place sprayer on firm, level ground to prevent accidental falls and equipment tip-over.
- **Not in presence of combustibles**. Do not use the pressure washer in the presence of flammable vapors, dust, gases, or other potentially combustible materials. Operate only where open flame or torch is permitted
- **Use backflow preventer.** The use of a back flow preventer (Part #222815 call 1-800-270-0810 to order) on the water supply hose is recommended and may be required by local code.
- **Clear work area.** Clear work area of all bystanders. Keep children and pets away.
- **Wear protective gear.** High-pressure spray can cause eye/skin injury, hot water can burn, and flying objects/debris can cause injury. Serious injection injury can result if high-pressure spray penetrates the skin**.** Operators should wear waterproof, thermally insulated gloves, safety glasses with side and top protection, face protection, and protective clothing when operating the machine. If spraying pressure washer specific cleaning chemicals, wear a respirator or mask to avoid inhalation of vapors if directed on the chemical label.
- **Wear non-slip footwear.** Use of pressure washer can create puddles and slippery surfaces. Wear footwear capable of maintaining a good grip on wet surfaces.
- **Check sprayer nozzle**. Sprayer nozzle can become a projectile and cause serious personal injury or property damage if not properly connected to the spray gun. Check to ensure the nozzle has been properly attached to the spray gun before using the pressure washer.

During use

- **Safety latch locked before starting engine.** Always engage the safety latch on the spray gun trigger before starting the engine.

Summary of Important Safety Information

- **Incoming water supply on.** Do not run the pump without the water supply connected and turned on. Operating the pressure washer without an incoming flow of water will damage the pump.
- **Wait before re-lighting burner.** NEVER attempt to immediately run or re-light the burner if it doesn't ignite the first time. Unburned oil or gas may have accumulated, causing potential explosion or fire hazard.
- **Use two hands.** Pressure washer spray gun kicks back when triggered. Firmly grasp with two hands.
- **Stay alert.** Watch what you are doing at all times.
- **Prevent slips / loss of balance**. High-pressure spray could cause you to lose balance from kickback forces, and wet surfaces can be slippery.
    - Keep good footing and balance at all times.
    - Do not overreach.
    - Do not stand on unstable support when spraying.
    - Use extreme caution when spraying from a ladder or scaffolding, ensure it is firmly anchored from sway or tip-over. Use extreme caution to avoid falling as spray gun kick can propel you off the ladder or scaffolding.
    - Be aware of puddles and slippery surfaces. Ensure there is adequate drainage to prevent pooling of water.
- **Keep spray away from people.** Never direct discharge stream at or near any person. Do not allow any part of the body to come in contact with the fluid stream. High-pressure spray will cause serious skin, eye, or falling injuries, and hot water can burn. Injection injury will occur if high-pressure spray pierces the skin, injecting liquid under the skin. Injection injury can result in blood poisoning and/or severe tissue damage leading to infection, gangrene and possibly amputation.
- **Prevent surface damage & flying debris** – Surfaces being sprayed must be strong enough to withstand high-pressure spray, or damage may result. In addition, high-pressure spray will dislodge unsecured objects as well as surface chips and debris, resulting in hazardous flying objects that can cause personal injury or property damage. Do not spray brittle surfaces or breakable, fragile, or unsecured objects such as:
    - stucco or laminar flagstone
    - some painted surfaces
    - windows or glass doors (because they may break)
    - light fixtures, flowerbeds, mailboxes
    - unsecured, lightweight objects
- **Do not lock spray gun trigger in ON position**. To reduce risk of injury, do not attempt to secure the spray gun open by blocking or tying the spray gun in the open position.
- **Keep spray away from electrical wiring**. Spray contact with electrical wiring will likely result in severe electrical shock or electrocution.
- **Use only approved cleaning chemicals.** Only chemicals specifically designed for use in pressure washers may be used. Never spray acids, corrosives, or abrasive or flammable liquids. Breathing hazards, surface burns/corrosion, or fire/explosion could result.
- **Follow cleaning chemical manufacturer's instructions.** Follow the chemical manufacturer's label instructions when handling or spraying chemicals. Understand all safety hazards and first aid for all chemicals being used. Wear protective gear as directed. Always wear protective gloves when handling and cleaning with chemicals. When cleaning filters, check whether dangerous chemicals have been used with the filter and take any precautions that may have been recommended by the supplier of these chemicals. Always dispose of hazardous fluids per local, state, and national guidelines.
- **Do not exceed pressure and or temperature limits**. Do NOT operate this pump with components (such as hose, connections, and spray gun) rated for lower pressure and or temperature limits than the machine's maximum rated pressure and temperature, or component could rupture and cause serious personal injury from escaping high pressure fluids. Do not set the pressure safety device above the rated pressure. **If the high-pressure safety device ever discharges water, turn the engine off and do not use the machine. The device will no longer function properly. See a dealer or call Product Support at 1-800-270-0810.**
- **Never pull by hose**. Do not move this machine by pulling on the hose. Hose or connections could fail and result in catastrophic high-pressure release of fluid as well as hose whipping.
- **Avoid sharp objects**. Keep hose away from sharp objects. Bursting hoses may cause injury.
- **No load bearing**. Do not use the pump to support other items of equipment that impose unacceptable loads on the pump. Do not attempt to use this machine as a prop.
- **Hot exhaust/parts**. Stay clear of engine and burner exhausts. Never touch hot engine muffler, burner/heating coil, or other hot surfaces. All are very hot and will burn you.
- **Hot spray gun metal when using burner**. Never touch the metal screw or any metal parts of the spray gun when the heater is being used – the metal gets very hot and will burn you.

Summary of Important Safety Information

- **Smoking/sparks**. Never smoke near the running engine, and never operate near sources of sparks or flames as flammable fuel vapors are in the vicinity of the pressure washer.
- **Lock trigger safety latch when not spraying**. Spray gun is equipped with a built-in trigger safety latch to guard against accidental trigger release. Rotate safety latch to the locked position when not spraying.
- **Relieve water pressure.** Always stop the product and relieve system pressure before leaving the sprayer unattended, or when disconnecting hoses, removing nozzles, or servicing the pump.
- **Refueling**. Never add gasoline to the engine or fuel to the burner unless unit is off and has cooled.
- **Do not direct spray at this machine.** Do not attempt to clean this machine with its own spray. Engine damage will result. Cleaning should be done with a damp sponge with the engine OFF.
- **Seek medical aid for suspected carbon monoxide poisoning**. The running engine gives off carbon monoxide, a poisonous gas that can kill you. If you start to feel sick, dizzy, or weak while using the pressure washer, shut off the engine and get to fresh air RIGHT AWAY. See a doctor. You may have carbon monoxide poisoning.
- **Seek medical aid for suspected injection injury**. If injured by high-pressure fluid, no matter how small the wound is, see a doctor at once. A typical injection injury may be a small puncture wound that does not look serious. However, severe infection or reaction can result if proper medical treatment is not administered immediately by a doctor who is familiar with injection injuries.
- **Other exhaust dangers**. This product contains or emits chemicals known to the State of California to cause cancer, birth defects or other reproductive harm. Avoid inhalation of exhaust.

After use

- **Cool engine before storing.** Let engine cool for at least five minutes before storing. A hot engine is a fire hazard.
- **Prevent accidental starting.** When pressure washer is not in use, remove spark plug or spark plug wire in order to ensure that pressure washer cannot be started in a storage location or by untrained persons.
- **Storage location.** Store the pressure washer in a dry location away from sources of heat, open flames, sparks or pilot lights – such as water heaters, space heaters, furnaces, clothes dryers, or other gas appliances – EVEN IF the pressure washer's gas tank is empty, residual vapors or fuel could ignite.
- **Periodic maintenance.** Perform periodic maintenance as directed in this manual to keep the pressure washer in safe working condition.

Safety - Inspection/Maintenance

Inspect and maintain your pressure washer on a regular basis and repair as needed to keep it in safe working condition:

- **Turn off / relieve pressure first.** Turn off pressure washer and relieve system pressure before inspection or maintenance. Remove spark plug or spark plug wire before working on the engine or pressure washer to prevent accidental starting.
- **Fuel valve off.** Turn fuel shut-off valve to OFF position before transporting or servicing the pressure washer.
- **Follow maintenance schedule.** Follow all maintenance instructions in this pressure washer manual and the engine manual.
- **Replace guards / shields.** Make sure all guards and shields are replaced after servicing the pressure washer.
- **Replacement parts.** If a part needs replacement, only use factory approved repair parts. Replacement parts that do not meet specifications may result in a safety hazard or poor operation of the pressure washer and will void the warranty.

Limited Warranty

Dear Valued Customer:

The NorthStar Product you just purchased is built with the finest material and craftsmanship. Use this product properly and enjoy the benefits from its high performance. By purchasing a NorthStar product, you show a desire for quality and durability. Like all mechanical equipment this unit requires a due amount of care. Treat this unit like the high quality piece of machinery it is. Neglect and improper handling may impair its performance. Please thoroughly read the instructions and understand the operation before using your product. Always contact NorthStar Product Support at 1-800-270-0810 prior to having any service or warranty work performed, as some services performed by parties other than NorthStar approved service centers may void this warranty. This warranty is in lieu of any other warranty expressed or implied and NorthStar assumes no other responsibility or liability outside that expressed within this warranty.

Limited Warranty

NorthStar shall warranty any piece of equipment manufactured, or parts of equipment manufactured, to be free from defects in material or workmanship for a period of:

NorthStar Warranty		
Item #	**Consumer Warranty Period**	**Commercial Warranty Period**
157595	2 years from date of purchase by user	2 years from date of purchase by user

Engine Warranty		
Item #	**Consumer Warranty Period**	**Commercial Warranty Period**
157595	3 years from date of purchase by user	3 years from date of purchase by user

"Consumer use" means personal residential household use by a consumer. "Commercial use" means all other uses, including use for commercial, income producing or rental purposes or when purchased by a business.

This warranty applies to the original purchaser of the equipment (verification of purchase, in the form of a receipt, is the responsibility of the buyer), is non-transferable, and covers parts and labor. Parts will be replaced or repaired at no charge, except when the equipment has failed due to lack of proper maintenance. If a part is no longer available, the part may be replaced with a similar part of equal function. Any misuse, abuse, alteration or improper installation or operations will void warranty. Determining whether a part is to be replaced or repaired is the sole decision of NorthStar. NorthStar will not provide for replacement of complete products due to defective parts. Any costs incurred due to replacement or repair of items outside of a NorthStar approved facility is the responsibility of the buyer and not covered under warranty. Transportation costs to and from service center is the responsibility of the customer.

In addition to the normal warranty, NorthStar shall warrant any normal wear item from defects in material or workmanship for a period of 90 days from the date of purchase by user. Normal wear items include, but are not limited to, nozzles, quick connect fittings, valves, high and low pressure water seals/packing, high and low pressure hoses, O-rings, unloader valves and filter elements.

This warranty specifically excludes the following; failure of parts due to damage caused by accident, fire, flood, windstorm, acts of God, applications not approved by NorthStar in writing, corrosion caused by chemicals, use of replacement parts which do not conform to manufacturer's specifications, damage related to the use of biodiesel fuel, damage to accessory parts such as starting batteries, damage related to rodent and/or insect infestation and damage caused by vandalism. Additional exclusions: loss of running time, inconvenience, loss of income, or loss of use, including any implied warranty of merchantability of fitness for a specific use. Also, Outdoor Power Equipment needs periodic parts and service to perform well, and this warranty does not cover instances when normal use has exhausted the life of a component or the engine.

This warranty does not cover any personal injury or damage to surrounding property caused by failure of any part. Repair or replacement of parts does not extend the warranty period.

Normal burner maintenance such as cleaning and adjusting electrodes, descaling the coil, desooting the coil, air adjustments, fuel system cleaning and obstruction due to build up is not covered by this NorthStar warranty.

The engine warranty is covered under the terms and conditions as outlined by the engine manufactures warranty contained herein and is the sole responsibility of the engine manufacture. Normal engine maintenance such as spark plugs, air filters, adjustments, fuel system cleaning and obstruction due to build up is not covered by this NorthStar warranty.

Please fill in the following information and have it on hand when you call in on a warranty claim.

Customer Number: _____

Date of Purchase: _____

NorthStar Serial Number: _____

Item Number: _____

⚠WARNING: This product can expose you to chemicals including gasoline engine exhaust, which is known to the State of California to cause cancer, and carbon monoxide, which is known to the State of California to cause birth defects or other reproductive harm.

For more information go to www.P65Warnings.ca.gov.



Manufactured by
Northern Tool + Equipment Co., Inc.
Burnsville, MN 55306
NorthernTool.com