M157140E.1

ITEM NUMBER: 157140

SERIAL NUMBER: _____

Owner's Manual

Instructions for Assembly, Testing, Operation, Servicing, and Storage

Soft wash system with bleach pump: For outdoor use with bleach**

⚠ WARNING

READ and UNDERSTAND this Owner's Manual completely before using this sprayer. Assemble, test, and use only in accordance with this Owner's Manual instructions.

EXERCISE CAUTION when mixing chemicals as incorrect ratios or mixtures could release harmful gases.

READ and FOLLOW chemical label instructions.

KNOW emergency procedures BEFORE handling chemicals. Sprayer leaks, bodily chemical contact, poisoning, and spills require immediate response.

AVOID inhaling, ingesting, or coming into contact with any chemicals.

WEAR personal protective gear when filling, using, cleaning, and servicing the sprayer.

KEEP sprayer and spray materials away from children and pets. Some chemicals are especially toxic to them.

DO NOT TURN ON POWER to sprayer until ready to spray in order to avoid unintentional spray release.

SOAK vegetation in the area surrounding the work zone well prior to and after spraying bleach. Bleach can kill vegetation if not rinsed thoroughly.

ALWAYS keep a fire extinguisher rated "ABC" nearby.

Improper use of the sprayer or handling of chemicals could result in serious injury or illness to the operator or nearby persons/animals or could cause damage to the environment.

**This sprayer is recommended for use in spraying bleach. The sprayer will be damaged, and warranty voided if used to apply any petroleum-based product (gasoline, diesel, kerosene, or oil). The sprayer should not be used to transfer any product intended for human consumption. WE RECOMMEND THAT THE SPRAYER NOT BE USED FOR OTHER PURPOSES ONCE IT HAS BEEN USED FOR SPRAYING BLEACH. Any chemical will leave some residual in the tank liner or sprayer components, even after the sprayer has been properly cleaned. These residual chemicals can have unexpected effects on future uses. This sprayer should not be used by people with reduced physical, sensory or mental capabilities or lack of experience and knowledge.

Any Questions, Comments, Problems, or Parts Orders

Call NorthStar Product Support at 1-800-270-0810

Hazard Signal Word Definitions

	This is the safety alert symbol. It is used to alert you to potential personal injury hazards. Obey all safety messages that follow this symbol to avoid possible injury or death.
⚠DANGER	DANGER (red) indicates an imminently hazardous situation which, if not avoided, will result in death or serious injury.
⚠WARNING	WARNING (orange) indicates a potentially hazardous situation which, if not avoided, could result in death or serious injury.
⚠CAUTION	CAUTION (yellow) indicates a potentially hazardous situation which, if not avoided, may result in minor or moderate injury.
CAUTION	CAUTION (yellow) used without the safety alert symbol indicates a potentially hazardous situation which, if not avoided, may result in property damage. fig01453

Table of Contents

Intended Use 4
Summary of Important Safety Information 5-6
During Assembly
During Operation
- General Chemical Safety
- Chemical Application Safety
- Chemical Accident Procedures

Warning Label Locations 7
Component Inventory
Unpacking 8-9
Unpacking the Manual Bag 10-11
Assembly
Step One: Install axle and wheels 12
Step Two: Install leg and handle receiver tubes to cart 13
Step Three: Install handle 14
Step Four: Install pump and fittings 15
Step Five: Install gun clips 16
Step Six: Install front hose wrap 17
Step Seven A: Install gun hose and back hose wrap 18
Step Seven B: Install gun hose continued 19
Step Eight: Connect wire harness to battery (not included) 20-21
Step Nine: Check and test completed assembly 22
Machine Components 23-24
Operation
Important Safety Information - Operation 25-28
- General Chemical Safety
- Chemical Application Safety
- Chemical Accident Procedures

Preparing the Sprayer for Each Use 29
Using the Sprayer
Step One: Assess wind conditions and clear work area 30
Step Two: Fill the sprayer 31-32
Step Three: Operate the sprayer 33-35
Step Four: Clean sprayer and decontaminate after use 36
Storage 37
Preparing for storage
Removing from storage

Troubleshooting 38
Maintenance 39
Specifications 40
Exploded View and Parts Breakdown 41-42
Pump Breakdown – Exploded View 43
Limited Warranty 44

Intended Use

The sprayer is intended for use in spraying bleach concentrations of 3% or less.

SPRAYING CHEMICALS:
Hazardous chemicals must be handled with caution as directed throughout this manual and on the chemical label.

The sprayer is intended for use in spraying chemicals in liquid form only. The sprayer is NOT intended for use in spraying chemicals in dry or aerosolized form, or for use with fumigants.

Always flush the sprayer after each use to clean the chemical out of the pump, hoses, and spray gun. The life of the sprayer will be shortened if it is not flushed after each use.

WE RECOMMEND THAT THE SPRAYER NOT BE USED FOR OTHER PURPOSES.
Any chemical will leave some residual in the tank liner or sprayer components, even after the sprayer has been properly cleaned. These residual chemicals can have unexpected effects on future uses.

NOTE: The sprayer will be damaged, and warranty voided, if used to apply any petroleum-based product (gasoline, diesel, kerosene, or oil).

NOTICE: Not for use on painted wood surfaces. Use only on hard, non-porous surfaces.

Contact NorthStar Product Support at 1-800-270-0810 for any questions about the appropriate use of the sprayer and/or optional accessories.

Summary of Important Safety Information

⚠ WARNING

Read and understand **this owner's manual** completely before using the sprayer.
Read each **chemical label's instructions** before handling the chemical.

Improper use of the sprayer or handling of chemicals could result in serious injury or illness for the operator or nearby persons/animals, or cause damage to the environment.

LISTED BELOW is a summary of safety information of particular importance. See individual sections of this owner's manual for more details.

---------- DURING ASSEMBLY ----------

- **EXERCISE CAUTION when attaching wire harness to battery terminals**. Follow the steps listed in the Assembly section of this manual in *exact sequence* when connecting the sprayer's wire harness to the battery terminals. *Caution must be exercised to avoid contact with battery acid and to prevent sparking.*
- **CHECK and TEST completed assembly** as directed in this manual. Serious injury could result from chemical leaks if sprayer is improperly assembled.
- **DO NOT MODIFY sprayer's design.**

---------- DURING OPERATION ----------

General Chemical Safety

- **READ and FOLLOW all chemical label instructions and warnings**.
- **AVOID inhaling, ingesting, or coming into contact with any chemicals**.
- **KNOW applicable licensing and regulatory requirements** for the chemical you plan to use.
- **KNOW emergency procedures before handling chemicals.** Carefully review Chemical Accident Procedures listed below and later in this manual. Also see First Aid instructions on the chemical label.
- **WEAR protective clothing, eye protection, and chemical resistant gloves** when filling, using and cleaning the sprayer. Wear additional protective gear, such as facemask or apron, as recommended on the chemical label.
- **EXERCISE EXTRA CAUTION around children and pets.** Some chemicals are especially toxic to them. Keep sprayer and spray materials away from them at all times.
- **DO NOT MIX OR POUR chemicals in an enclosed, unventilated area.**
- **DO NOT USE flammable chemicals** in the sprayer.
- **STORE chemicals in a correctly labeled container and in a secure location**.
- **MONITOR the health of operators frequently exposed to chemicals**, as recommended by the chemical label or local/federal regulations.

Chemical Application Safety

Before Spraying

- **INSPECT and PREPARE sprayer before each use** as directed in this manual.
- **DO NOT TURN ON POWER to sprayer until ready to spray** in order to avoid unintentional spray release.
- **DO NOT SPRAY when wind speed exceeds 5 MPH** in order to minimize spray drift.
- **CLEAR work area of people/ pets and POST warning notices** to restrict access for the period recommended on chemical label.
- **SOAK** vegetation in the area surrounding the work zone prior to spraying bleach. Bleach can kill vegetation if not soaked thoroughly.
- **KEEP sprayer and spray materials away from children/pets**. Some chemicals can be especially toxic to children and animals.
- **DO NOT ALLOW anyone younger than 16 to operate sprayer** since some chemicals are especially toxic to children.

During Spraying

- **DO NOT OVERAPPLY chemicals**. Apply at rate recommended by chemical manufacturer. Excess chemicals can be dangerous to humans and animals, damage desirable plants, and contaminate soil and water sources.
- **DO NOT EAT, DRINK, SMOKE, RUB YOUR EYES, or TOUCH YOUR BARE SKIN while handling chemicals and spraying**.
- **NEVER POINT THE SPRAY GUN at people or animals.**
- **EXERCISE EXTRA CAUTION when spraying near areas accessible to children and pets**.

Summary of Important Safety Information (continued)

- **CLEAN up spills immediately** per instructions on chemical labels.
- **TURN OFF power to sprayer and RELIEVE system pressure** before leaving sprayer unattended.
- **SEE Troubleshooting section of this manual before attempting any repairs**. Wear personal protective equipment and follow safety instructions.

After Spraying

- **SOAK** vegetation in the area surrounding the work zone immediately after spraying bleach. Bleach can kill vegetation if not soaked thoroughly.
- **CLEAN sprayer immediately after use** according to the directions provided in this manual.
- **DECONTAMINATE yourself after you are** done spraying and have cleaned the sprayer. Wash all exposed areas of the body with soap and water and remove and launder clothing.
- **DISPOSE OF or STORE remaining chemicals in secure storage with correctly marked container**.

Chemical accident procedures

Immediate response is necessary in the event of sprayer leaks, bodily chemical contact, poisoning, or spills. See instructions below:

Sprayer leak	**If the sprayer develops a leak, *immediately stop spraying***. Turn off power to the sprayer and follow directions below, as applicable.
Bodily chemical contact	**Personal contamination can occur when chemicals splash, spill, or spray directly onto a person.** 1. Immediately follow First Aid instructions on chemical label. General procedures for contact with bleach or surfactant includes: a) Eyes – immediately rinse with water for 15 minutes. If irritation persists, contact a doctor. b) Skin – rinse all contaminated skin surfaces with water. If irritation persists, contact a doctor. c) Clothing – remove contaminated clothing. Dispose of heavily contaminated clothing per chemical label instructions. 2. Seek medical advice if instructed on the label or the victim experiences symptoms of harmful effects. Bring the chemical label for reference.
Poisoning by ingestion or inhalation	**In case of poisoning from ingestion or inhalation**: ***If the victim has collapsed or is not breathing, call 911***. Otherwise: 1. If you are the victim, immediately seek assistance from nearby personnel because you may become incapacitated. 2. Immediately follow first aid instructions on chemical label. General procedures for ingestion or inhalation of bleach or surfactant includes: a) For ingestion: Drink a glassful of water. Call a doctor or poison control center. DO NOT induce vomiting unless instructed to do so by a doctor or poison control center. b) For inhalation: Immediately move to fresh air. 3. Call a poison control center for further advice. **In the U.S., call 1-800-222-1222.** Have the chemical label available for reference.
Chemical spills	**Chemical spills must be quickly contained and properly cleaned up.** Refer to the chemical label for any specific clean-up instructions. General procedures include: 1. **Controlling** the spill by stopping the source of the spill. 2. **Containing** the spill so that it does not spread and get into water sources. 3. **Cleaning up** the spill immediately. 4. **Seeking additional advice** from: - *Chemical manufacturer*. See chemical label for contact information. - *State pesticide regulatory agency*. In the U.S., call the National Pesticide Info. Ctr. at 800-858-7378 for assistance in contacting your state's agency.

Warning Label Location

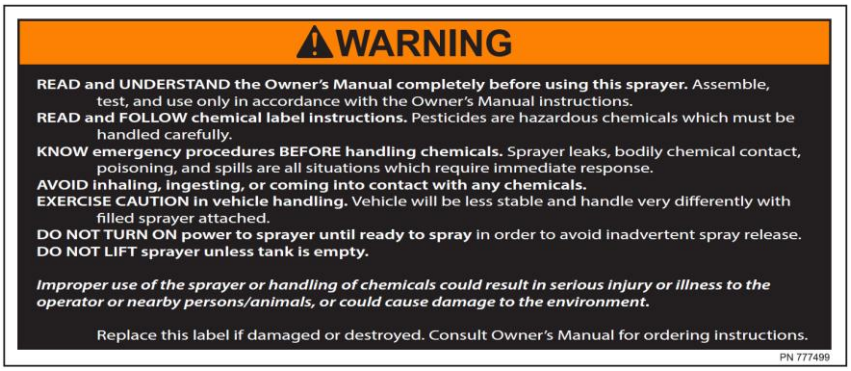

Part Number: 777499

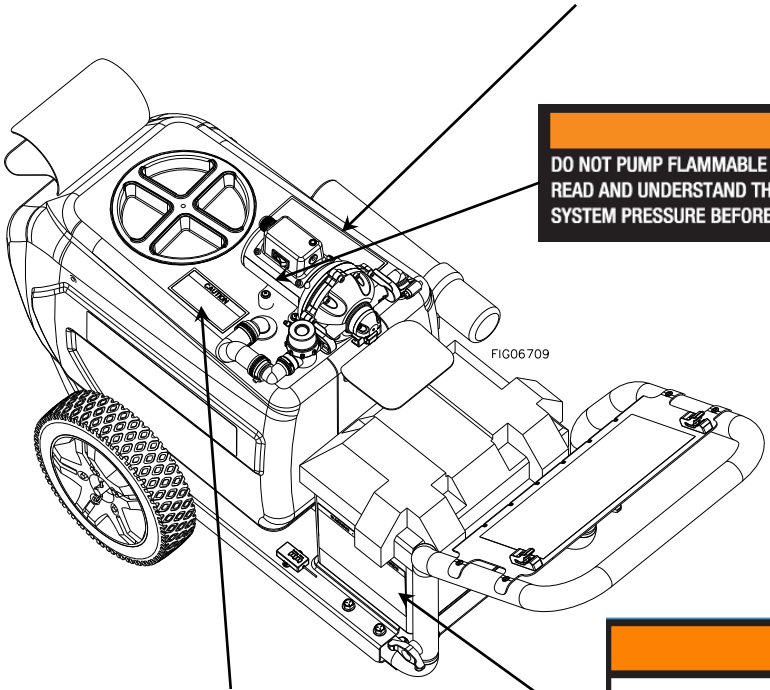



Part Number: 793288

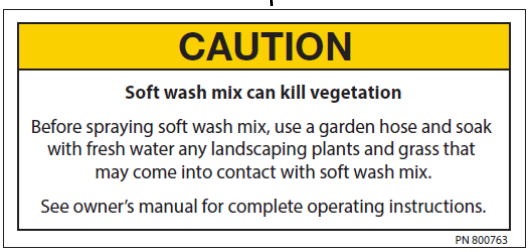

Part Number: 800763

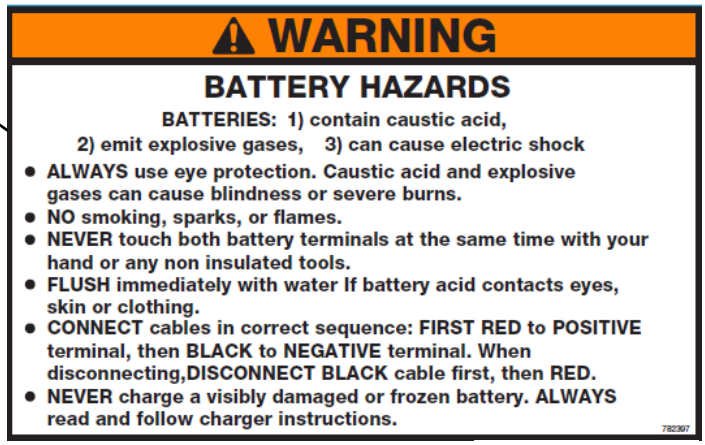

Part Number: 782397

Part#	Description
777499	Chemical Warning Label
793288	Pump Warning Label
800763	Vegetation Caution Label
782397	Battery Warning Label

Always make sure safety labels are in place and in good condition. If a safety label is missing or not legible, order new labels or unsafe operation could result.
To order replacement safety labels, call NorthStar Product Support at: **1-800-270-0810.**

Unpacking

Closely inspect all contents in the shipping carton.

Note that some parts are shipped inside the tank.

- If you have missing or damaged components, please contact NorthStar Product Support at: 1-800-270-0810.

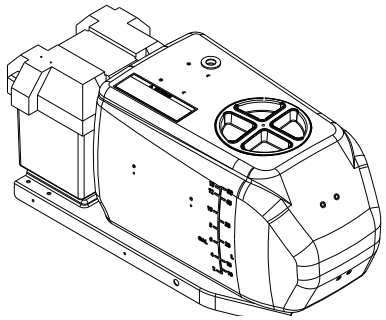

Sprayer assembly
(Qty 1)

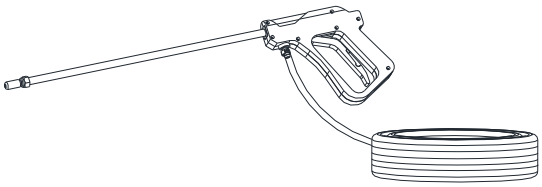

Spray gun & hose
(Qty 1)

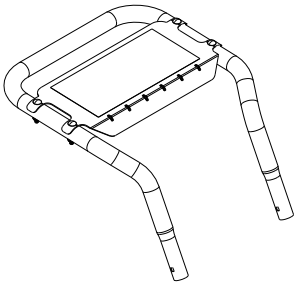

Handle assembly
(Qty 1)

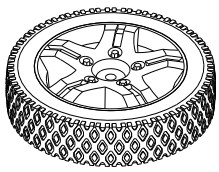

Wheel, 10" flat free
799882
(Qty 2)

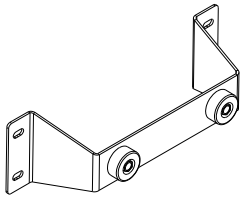

Leg assembly
(Qty 1)

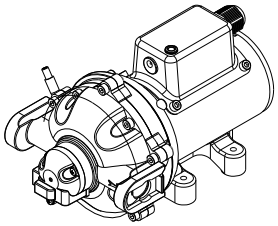

NorthStar 4062 pump w/ Motor Armor
157147
(Qty 1)

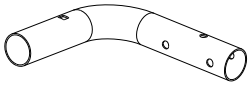

Handle receiver tube
799923
(Qty 2)

Unpacking

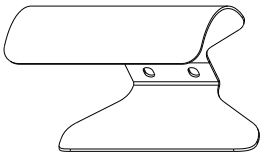

Hose wrap, front
800006
(Qty 1)

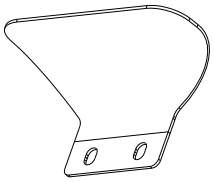

Hose wrap, back
800016
(Qty 1)

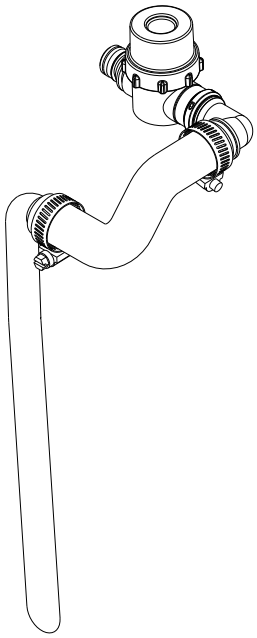

Inlet assembly
(Qty 1)

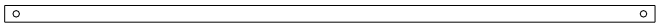

Axle
799900
(Qty 1)

Unpacking the Manual Bag

The following items are found in the manual bag.

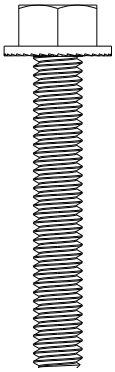

Bolt, 5/16"-18 x 2"
82018
(Qty 4)

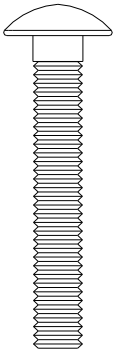

Bolt, 5/16"-18 x 2" carriage
82233
(Qty 2)

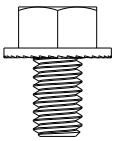

Bolt, 5/16"-18 x 1/2"
82014
(Qty 4)

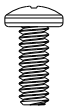

Screw, #10-24 x 1/2”
82059
(Qty 2)



Screw, #10-24 x 28mm
82061
(Qty 3)



Screw, #10 -24 x 32mm
82617
(Qty 1)



Nut, 5/16"-18 serr. flange
82019
(Qty 4)



Nut, #10-24 nyloc
82065
(Qty 2)



#10 Flat washer
82068
(Qty 4)

Unpacking the Manual Bag

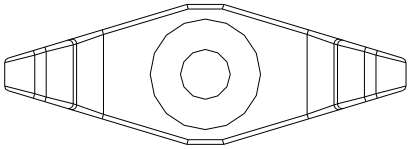

T-handle knob
38578
(Qty 2)

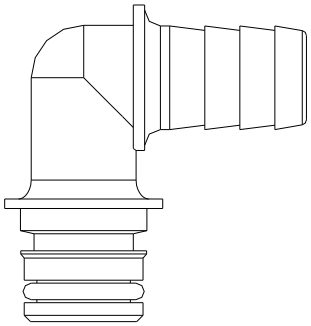

Fitting, QC x 5/8" HB
799878
(Qty 1)

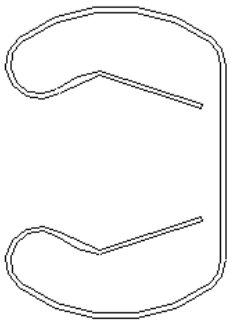

Gun clip
52034
(Qty 2)

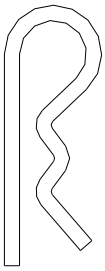

Hairpin clip
800438
(Qty 2)

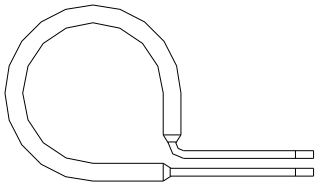

Hose guide
799947
(Qty 1)

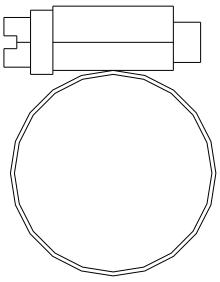

Hose clamp
793231
(Qty 2)

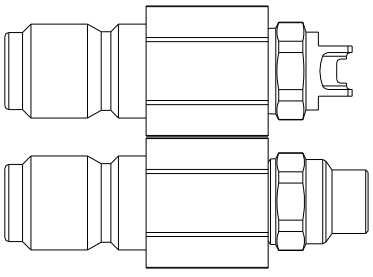

Nozzle assembly
(Qty 1)

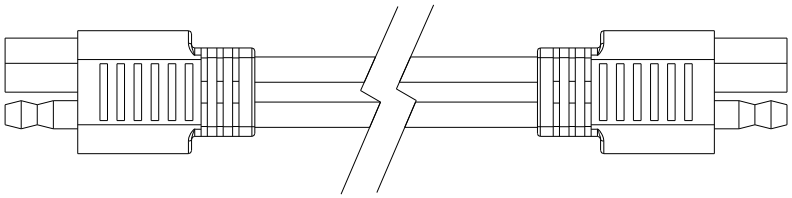

Pump power cord
800036
(Qty 1)

Assembly

Step 1 – Install axle and wheels.

- Insert axle through holes in cart.
- Insert wheels onto axle.
- Install hairpin clips through holes in axle.

Tools Needed

- None

Fasteners Needed from Owner's Manual Bag:

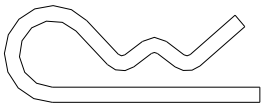

Hairpin clip
800438
(Qty 2)

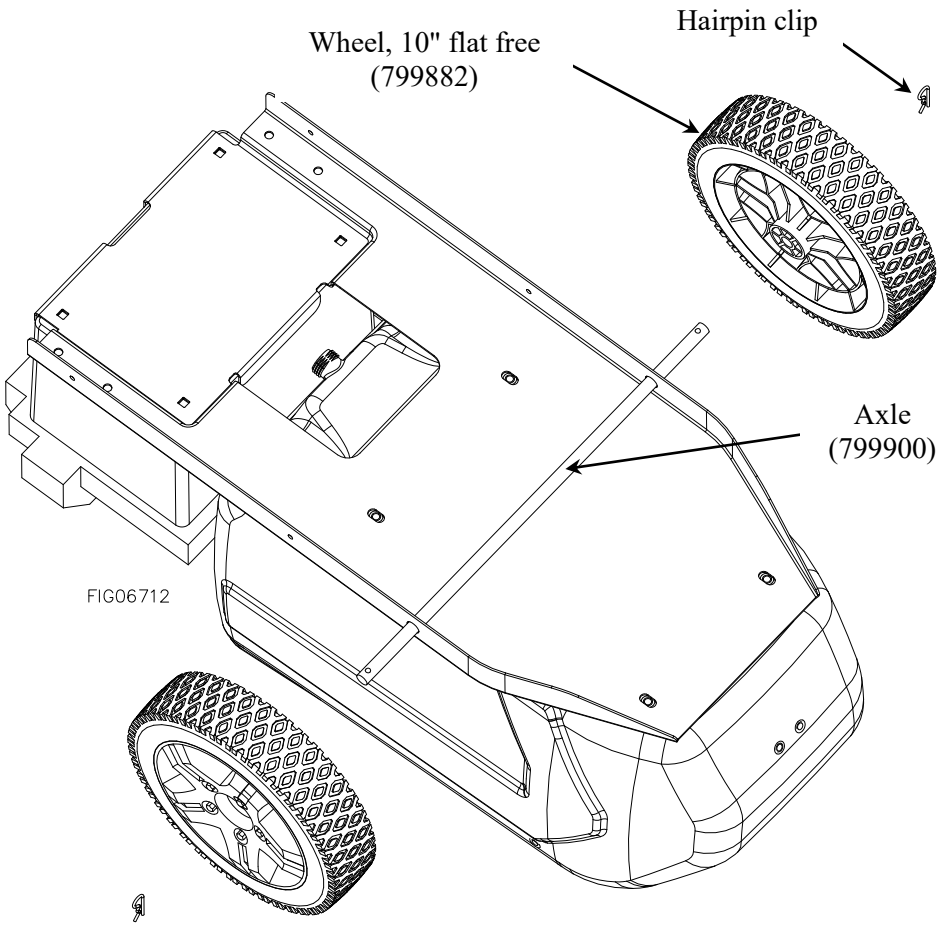

Assembly

Step 2 – Install leg and handle receiver tubes to cart.

- Install (2) handle receiver tubes and (1) leg.
- Attach with (4) 5/16" -18 x 2" bolts and (4) 5/16"-18 flange nuts.
- DO NOT TIGHTEN until after step 3.

Tools Needed

- None

Fasteners Needed from Owner's Manual Bag:

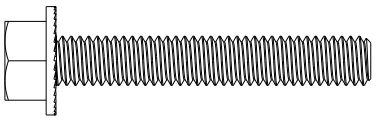

Bolt, 5/16" -18 x 2"
82018
(Qty 4)



Nut, 5/16" -18 serr. flange
82019
(Qty 4)

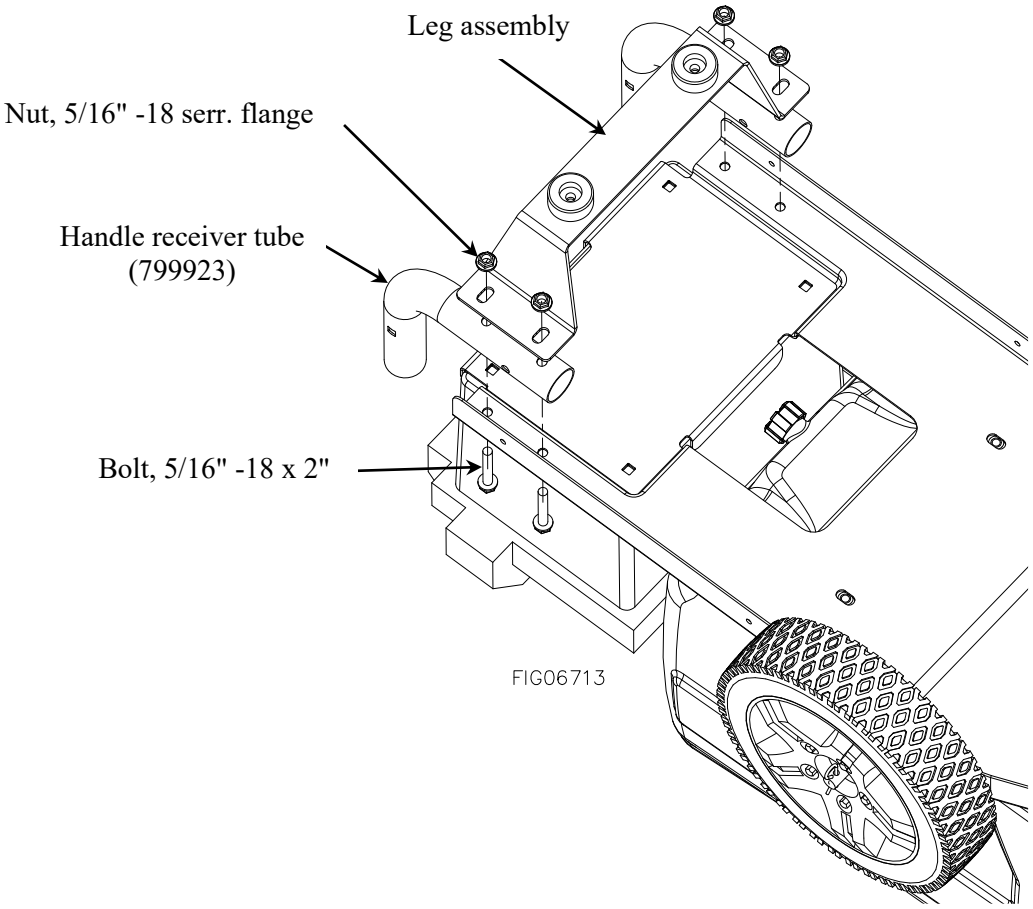

Assembly

Step 3 – Install handle.

- Slide handle onto handle receiver tubes.
- Insert (1) carriage bolt on each side.
- Tighten 5/16" locking knobs onto carriage bolts.
- Tighten bolts from step 2.

Tools Needed

- 1/2" wrench

Fasteners Needed from Owner's Manual Bag:

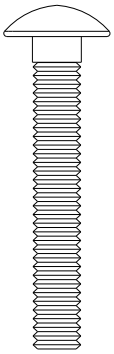

Bolt, 5/16"-18 x 2" carriage
82233
(Qty 2)

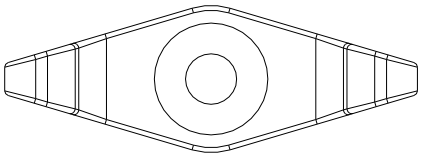

T-handle knob
38578
(Qty 2)

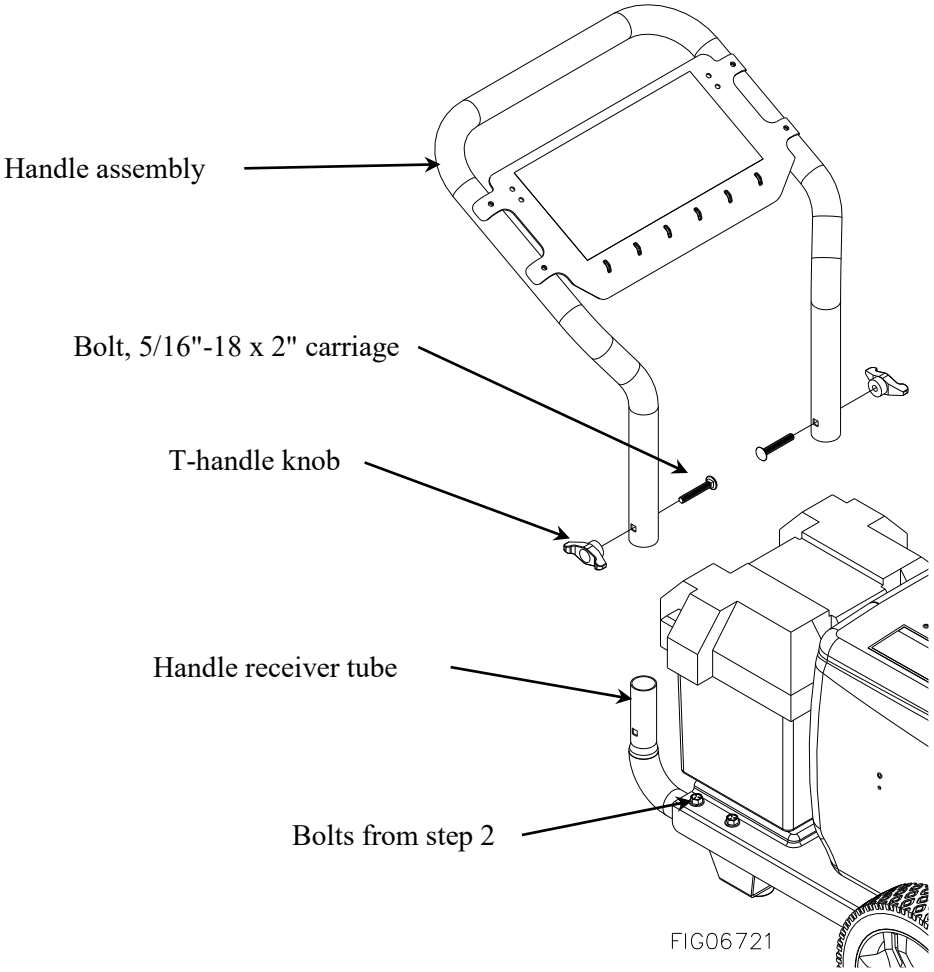

Assembly

Step 4 – Install pump and fittings

- Remove red shipping plugs from pump ports.
- Install inlet assembly into inlet port of pump and slide QC clip closed.
- Lubricate tank grommet with water and slide suction tube into grommet.
- Install pump to tank with (3) #10 x 25mm screws, (1) #10 x 28mm screw. Attach cap tether to longer screw.
- Install QC x 5/8" fitting into outlet port of pump and slide QC clip closed.

NOTE: To insert quick connect fittings, lubricate O-ring with water and twist fitting while inserting into pump port.

Tools Needed

- Phillips screwdriver

Fasteners Needed from Owner's Manual Bag:



Screw, #10 x 32mm
82617
(Qty 1)

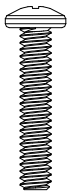

Screw, #10 x 28mm
82061
(Qty 3)

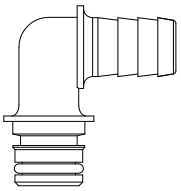

Fitting, QC x 5/8" HB
799878
(Qty 1)

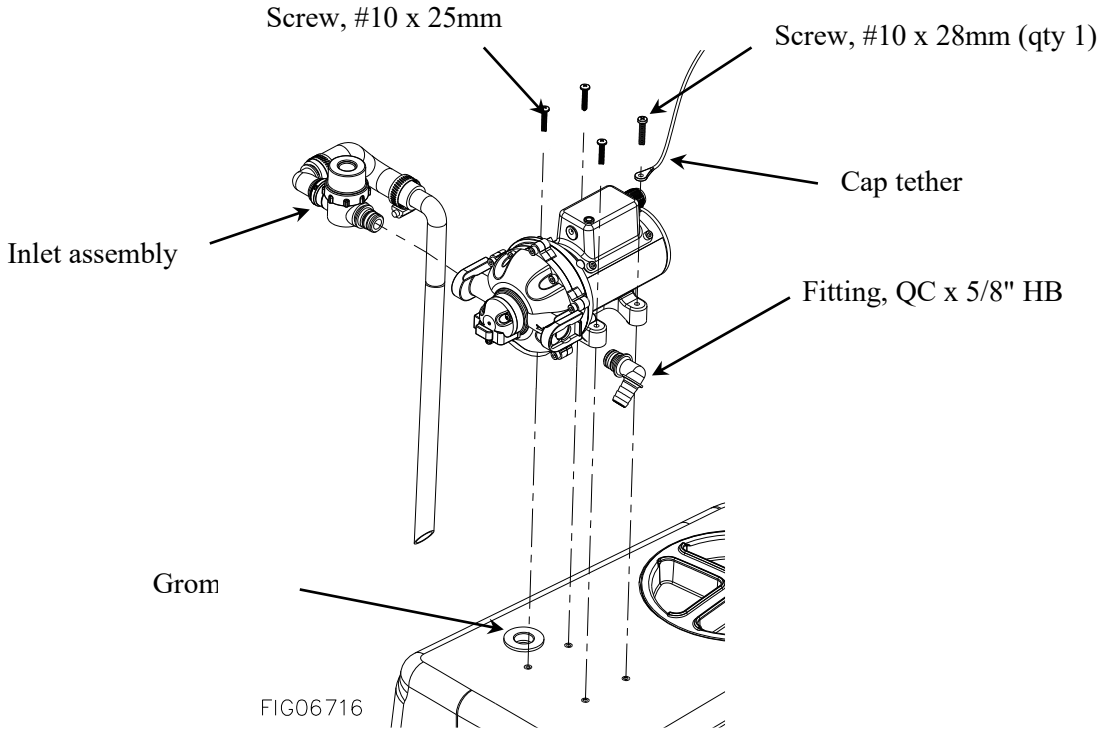

Assembly

Step 5 - Install gun clips

- Install gun clips (orient as shown below) to the handle billboard with (2) #10-24 x 1/2" screws and (2) #10-24 nyloc nuts.

Tools Needed

- Phillips screwdriver
- 3/8" Wrench

Fasteners Needed from Owner's Manual Bag:

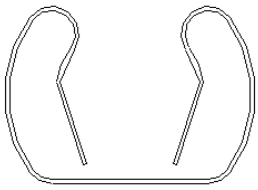

Gun clip
52034
(Qty 2)

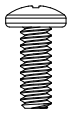

Screw, #10-24 x 1/2"
82059
(Qty 2)



Nut, #10-24 nyloc
82065
(Qty 2)

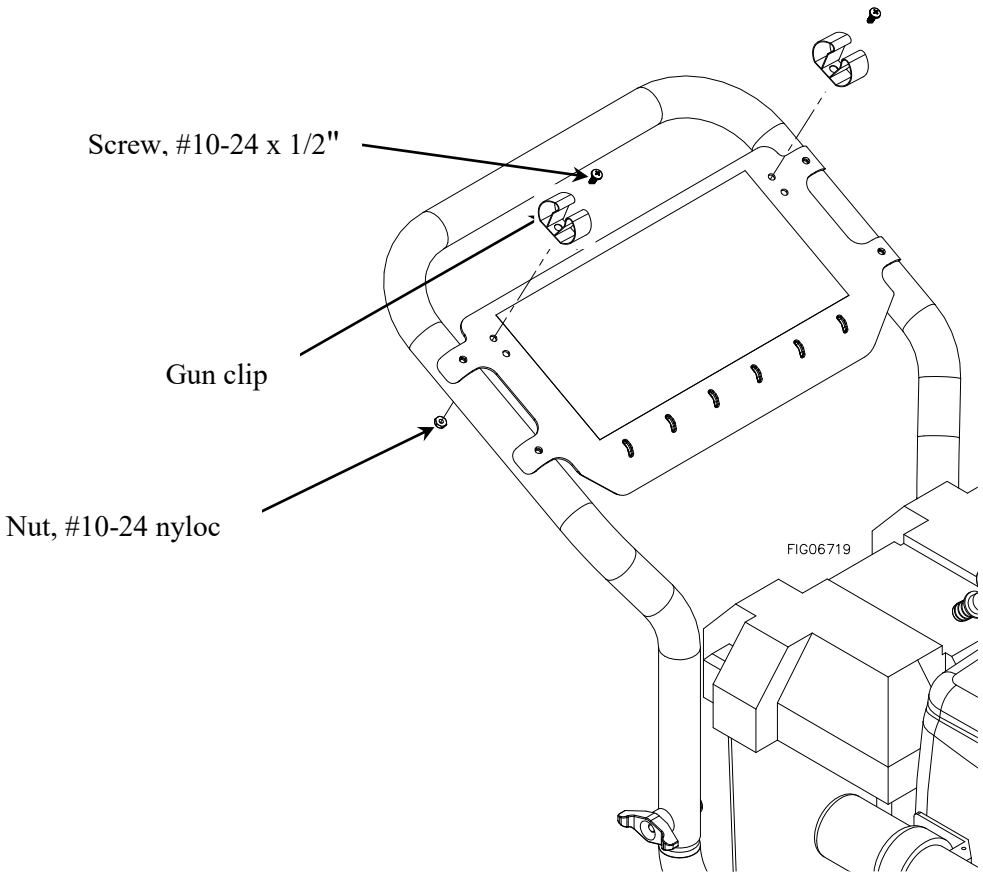

Assembly

Step 6 – Install front hose wrap.

- Install front hose wrap to front of tank (orient as shown).
- Attach with (2) 5/16" -18 x 1/2" bolts.
- Tighten bolts to 5 ft-lbs.

Tools Needed

- 1/2" Wrench

Fasteners Needed from Owner's Manual Bag:

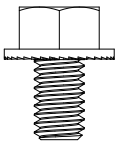

Bolt, 5/16" -18 x 1/2"
82014
(Qty 2)

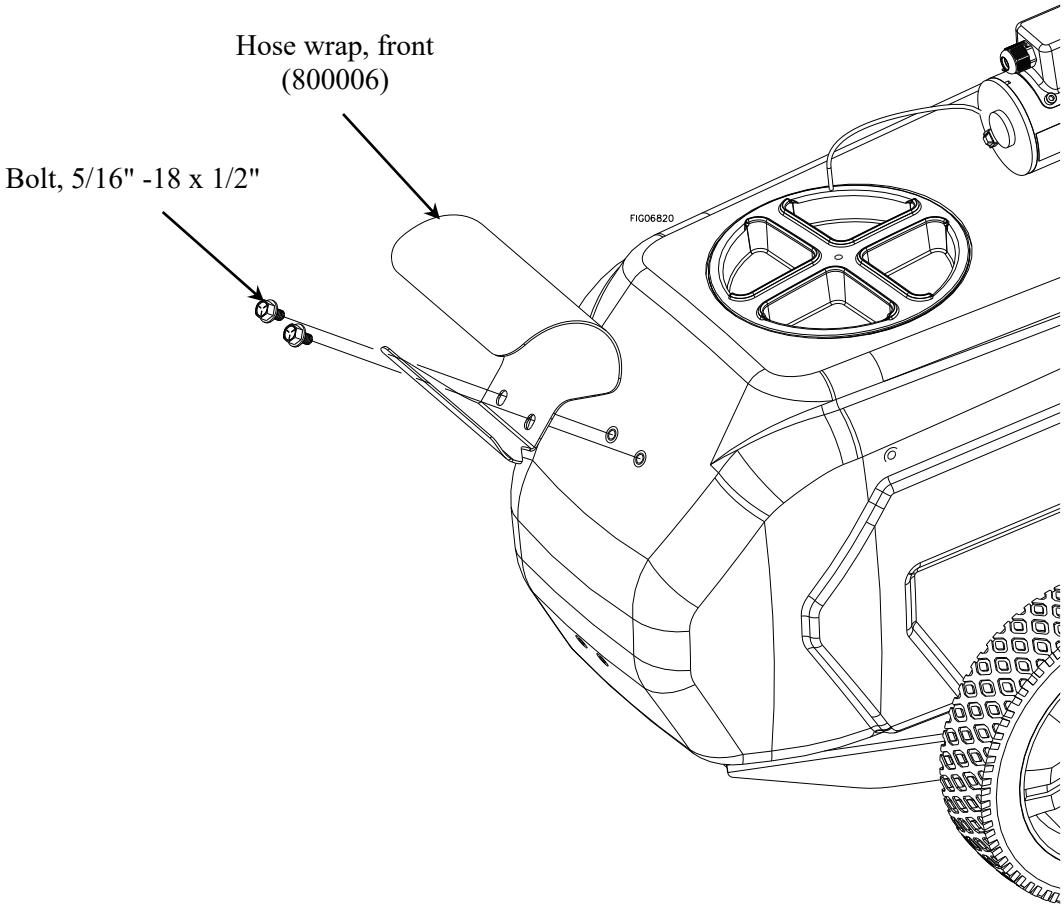

Assembly

Step 7a - Install gun hose and back hose wrap.

- Attach gun hose to pump outlet fitting. Secure with (1) hose clamp.
- Route hose through hose clip. Install hose clip to hose wrap and install hose wrap to tank. Attach to tank with (2) 5/16" - 18 x 1/2" bolts.
- Tighten bolts to 5 ft-lbs.

Tools Needed

- Flathead screwdriver
- 1/2" Wrench

Fasteners Needed from Owner's Manual Bag:

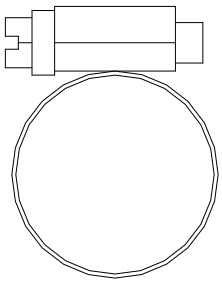

Hose clamp
793231
(Qty 2)

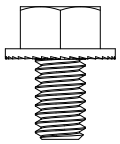

Bolt, 5/16" -18 x 1/2"
82014
(Qty 2)

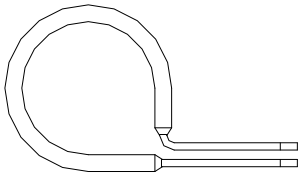

Hose guide
799947
(Qty 1)

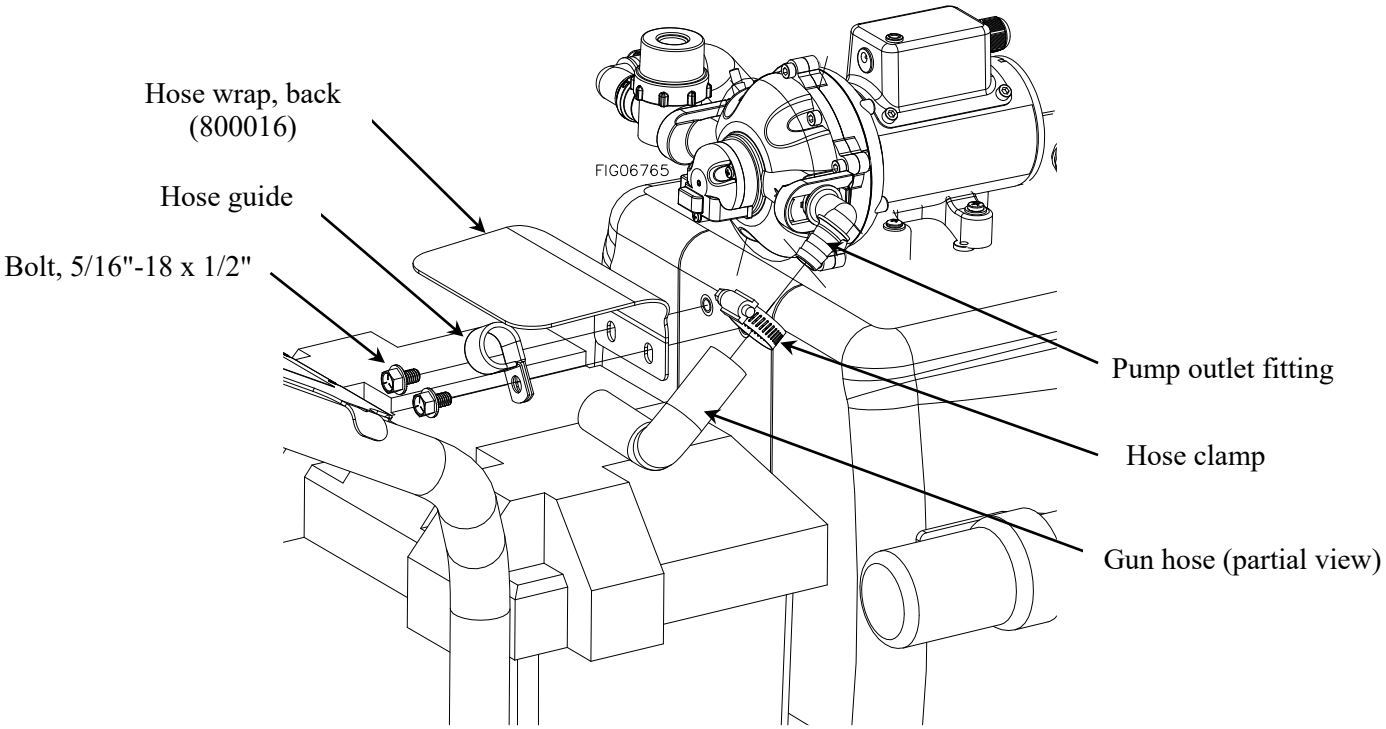

Step 7b - Install gun hose (continued).

- Wrap gun hose around tank.
- Attach gun hose to gun. Secure with (1) hose clamp.
- Attach spray gun to gun clips.

Tools Needed

- None

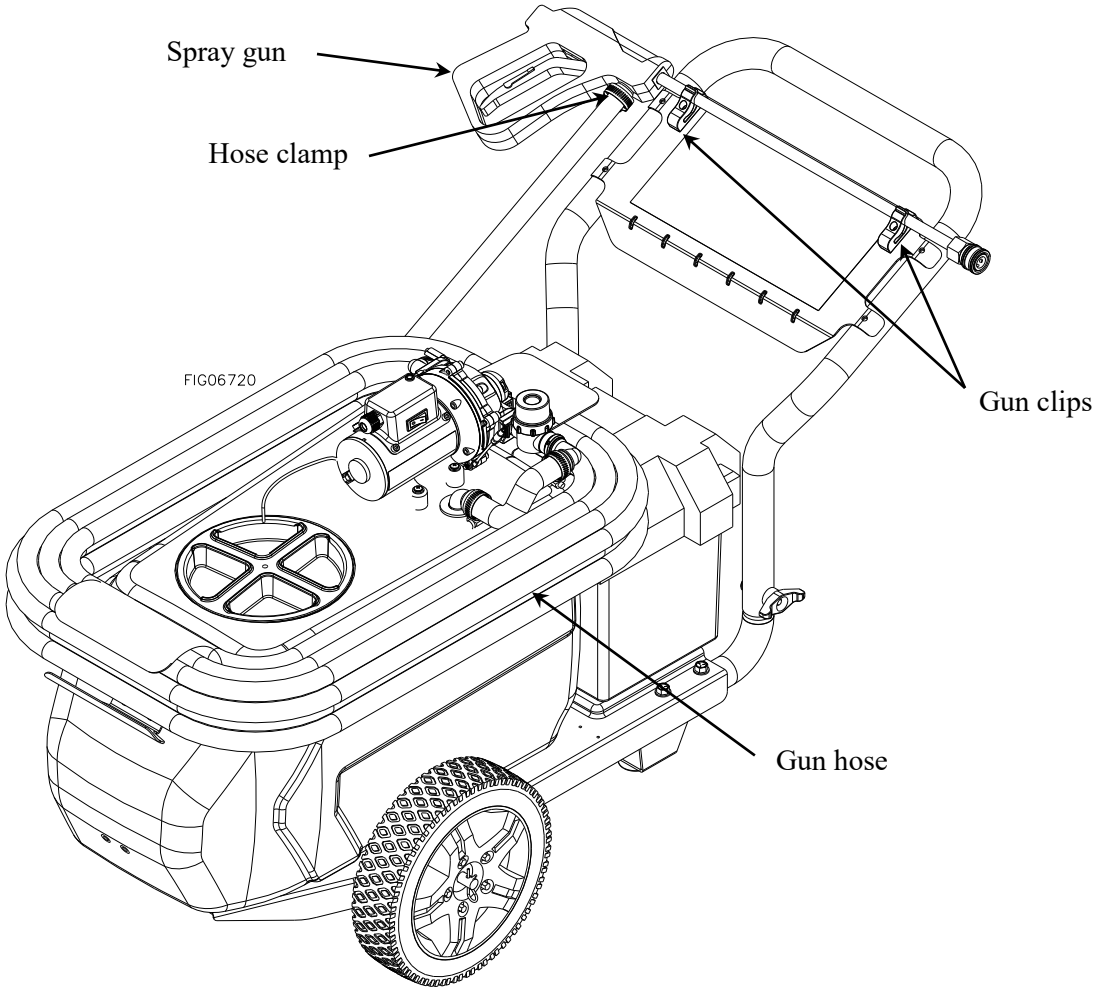

Step 8: Connect wire harness to battery (battery sold separately).

⚠ WARNING

Batteries are hazardous because they contain caustic acid, can emit explosive gases, and can cause electric shock.

Caution must be exercised when making connections to a battery to avoid shock and contact with the acid, and to prevent any sparking that could lead to an explosion.

ALWAYS follow the safety instructions and steps listed below i*n exact sequence* when connecting the sprayer's wire harness to the battery terminals.

1. Preparatory safety	**Preparatory safety steps:** • ALWAYS use eye protection. • NEVER smoke or work near sparks or other sources of ignition. • NEVER touch both battery terminals at the same time or with any non-insulated tools. • If battery acid contacts skin or clothing, flush immediately with water and neutralize with baking soda.
2. Place battery into battery box	**Place battery (sold separately) into sprayer's battery box** • A group size 24 battery is recommended if spraying for extended periods of time without charging (approx. 8 hours). • A group size U1 battery is recommended if spraying for shorter periods of time without charging (approx. 3 hours)**.**
3. Connect wire harness to battery	**Connect the sprayer's wire harness to the battery using the following procedure:** a) Connect the wire harness' ***red*** wire to the ***positive*** **(+)** terminal of the battery. b) Connect the wire harness' ***black*** wire to the ***negative*** **(-)** terminal of the battery. **WARNING:** Always connect in this sequence to avoid possible shock. c) Route wire harness 2-pin connector out of battery box so it is accessible. Replace battery box top and install strap around battery box. Note: Once connected, check battery voltage by pressing the ON button on battery monitor. 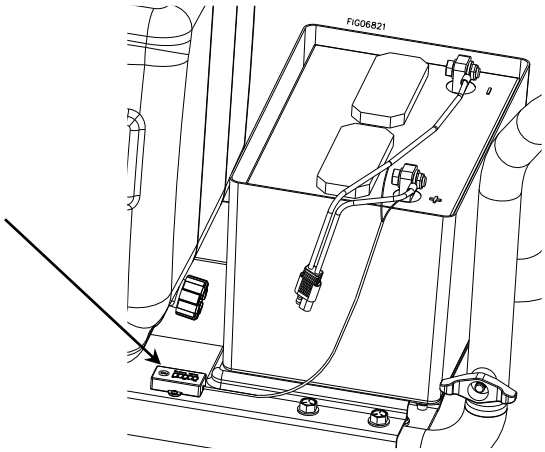

Assembly

4. Connect wire harness to pump power cord	**Connect the wire harness to the pump power cord:** Note: Make sure the ON/OFF switch on the pump is in the OFF position. a) Use the pump power cord to connect the 2-pin connector from the battery wire harness to the 2-pin connector from the pump. b) Ensure that wires align red to red and black to black. Pump will not turn on if polarity is reversed. 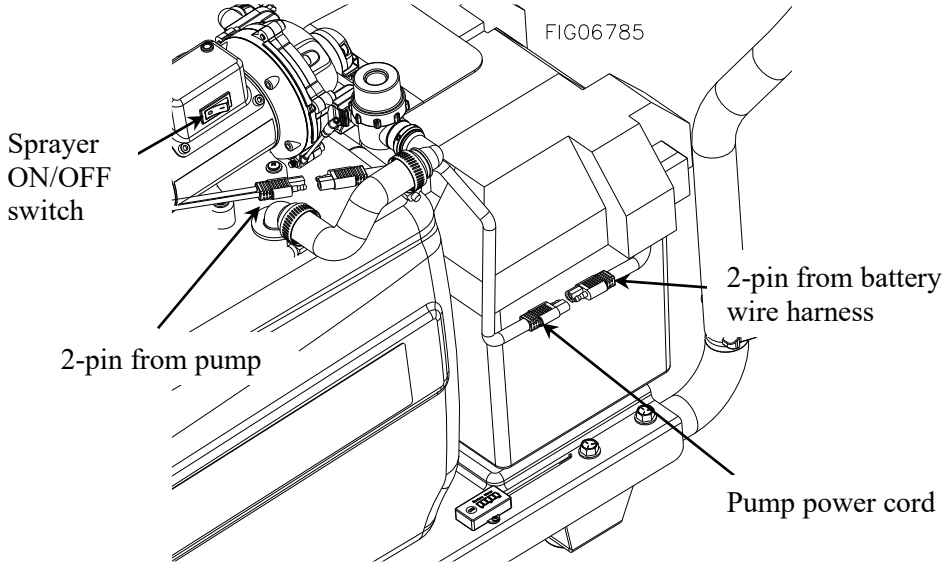
5. Verify connection	**Verify a complete connection has been made** by checking with a DC voltmeter, or by *briefly* turning the ON/OFF switch on the pump to the ON position and listening for pump activation.
6. Disconnect after use	**AFTER EACH USE, disconnect power to the sprayer** by disconnecting the battery wire harness from the pump power cord. A battery charger can be plugged into the 2-pin connector from the battery wire harness to charge the battery while still in the sprayer. *NOTE: It is important to disconnect power to the sprayer when not in use for safety reasons. ALWAYS verify that the power has been disconnected or the ON/OFF switch is in the OFF position before adding chemicals or servicing.*
7. To disconnect permanently	**When it is necessary to disconnect the wire harness from the battery, use the following procedure:** 1. Disconnect pump power cord from the battery wire harness. 2. Disconnect the wire harness from the battery as follows: a) Disconnect the wire harness' *black* wire from the *negative (-)* terminal of the battery. c) Disconnect the wire harness' *red* wire from the *positive (+)* terminal of the battery. **WARNING:** Always disconnect in this sequence to avoid possible shock.

Step 9: Check and test completed assembly.

⚠ WARNING

Check and test completed assembly

Serious injury could result from chemical leaks if sprayer is improperly assembled or the design of the sprayer is modified.

Follow the steps below to ensure the sprayer is properly assembled. Never modify the sprayer's design.

1. Check assembly	**Check assembly to assure the sprayer is properly assembled and in safe working condition:** a) Check that the gun clip screws are tight, hose clamps are secure, and all fasteners are tight. b) While it is unlikely that factory assembled components become loose, they should also be checked to make sure they are tight.
2. Test with water	**Test the system for leaks with water:** a) Fill the tank with water. b) Connect the battery wire harness to the pump power cord and turn the ON/OFF switch ON. The pump is an "on demand" pump. When turned on, the pump will prime itself, and then turn off. When the gun trigger is squeezed, the pump will automatically start. c) Operate the spray gun by squeezing the gun trigger. d) Check for leaks throughout the system. If a leak is detected, fix the leak and re-test the system with water.

Machine Components

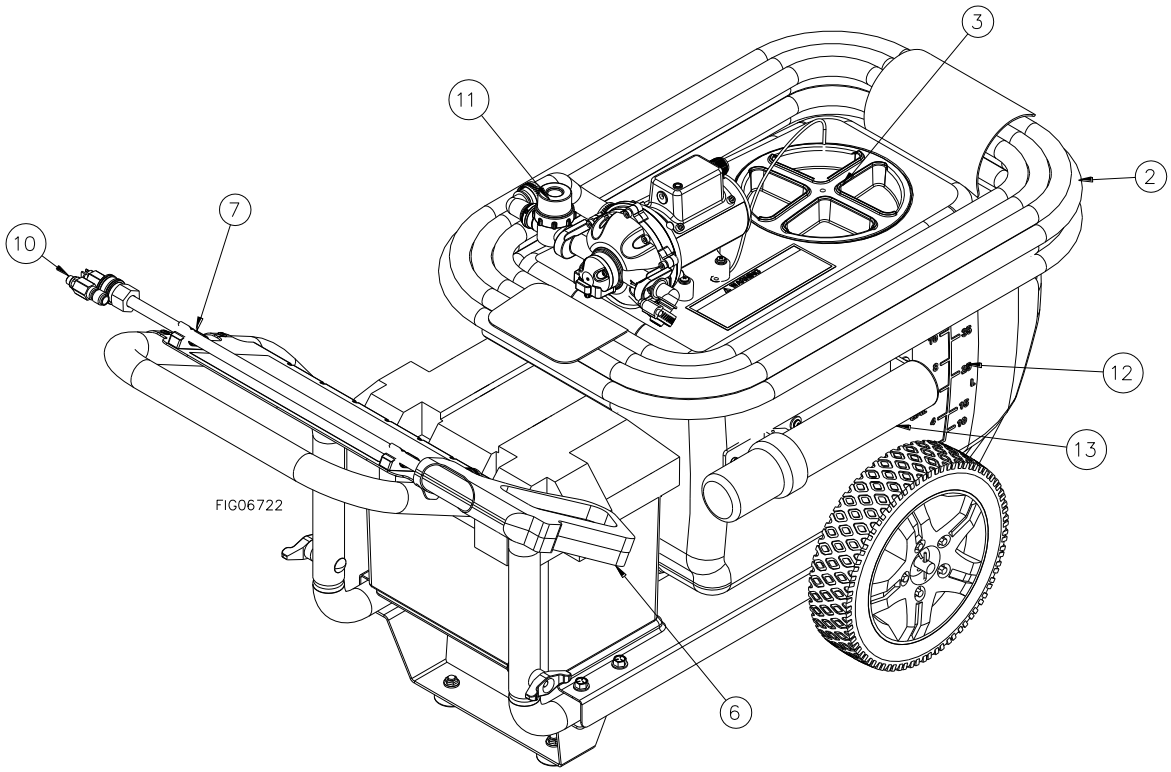

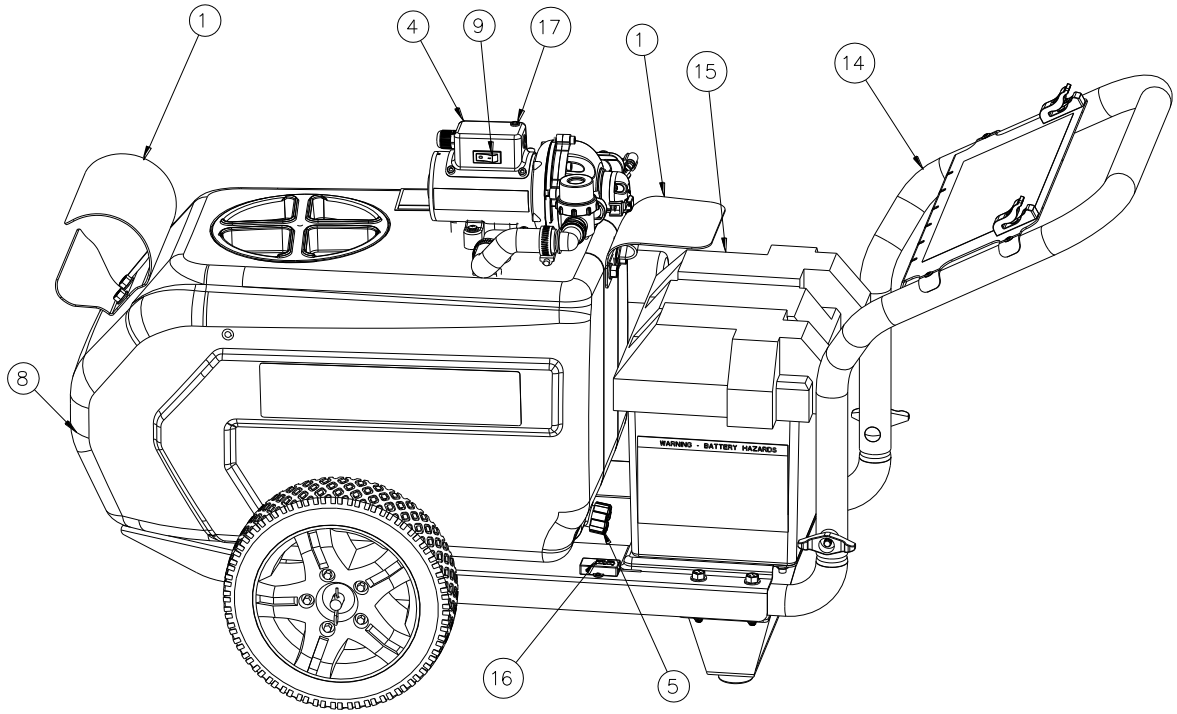

Machine Components

1. **Hose Wrap.** The hose wrap provides a storage location for the gun hose.

2. **Gun Hose.** The gun hose transfers chemical from the pump to the spray gun.

3. **Fill Cap.** Large diameter for easy filling. The fill cap has a vent to allow air to enter the tank as the chemical is dispensed.

4. **Sprayer Pump.** The sprayer pump makes the chemical flow to the spray gun and out the nozzle. The pump is equipped with a Motor Armor system. This system will shut the pump off in the event of a leak inside the pump cartridge to prevent damage to the motor.

5. **Drain Cap.** Remove the drain cap to empty the tank.

6. **Spray Gun.** Use the spray gun to apply chemical to specific areas. When the pump ON/OFF switch is in the ON position, the spray gun trigger is the pump ON/OFF control. Squeeze the trigger and the pump turns on, let go and the pump turns off.

7. **Gun Clips.** Use the gun clips to store the spot spray gun.

8. **Sprayer Tank.** The sprayer tank holds 13 gallons of liquid.

9. **ON/OFF Switch.** Allows the operator to turn the sprayer pump on and off.

10. **Spray Nozzle.** Quick connect allows easy change from fan tip to solid stream nozzle.

11. **Suction Strainer.** The suction strainer protects the pump from debris and has clear removable bowl for easy cleaning.

12. **Fill Marks.** Fill marks are molded into tank to monitor fluid level.

13. **Manual Tube.** The manual tube provides a location for storing the owner's manual.

14. **Handle.** The handle is used to lift and move the sprayer. Can be rotated for compact storage.

15. **Marine-grade Battery Box.** Fits Group 24 battery (battery not included).

16. **Battery Monitor.** Indicates charge of battery.

17. **LED.** The red LED light illuminates when there is a leak inside the pump cartridge.

Operation – Important Safety Information

Now that you have completed and tested your assembly, there is some important safety and health information you need to know with regard to handling and spraying chemicals.

⚠ WARNING

Carefully read and make sure you understand the following safety information before using the sprayer.

General Chemical Safety:

⚠ WARNING

- Heed the warnings below and follow all instructions carefully.
- Improper handling of chemicals can result in serious injury or illness, or cause damage to the environment.

- **Chemical label**. ALWAYS READ and FOLLOW all chemical label instructions.
- **Licensing/regulation**. Refer to any applicable licensing restrictions or state/federal regulations with regard to the application of the particular chemical you plan to use.
- **Emergency procedures**. Before handling chemicals, carefully review the Chemical Accident Procedures listed later in this section, as well as the Statement of Practical Treatment on the chemical label.
- **Inhalation/contact**. ALWAYS take precautions to avoid inhaling or coming into contact with the chemical.
- **Personal protective equipment**. ALWAYS wear protective clothing, eye protection, and chemical-resistant gloves when filling, using, and cleaning the sprayer. Wear additional protective gear (such as facemask or apron) as recommended on the chemical label.
- **Children/pets**. Some chemicals can be especially toxic to children and animals. ALWAYS exercise extra caution around children. Keep sprayer and all spray materials away from children and animals.
- **Ventilation**. ALWAYS ensure there is adequate ventilation when mixing, pouring, or spraying.
- **Flammables**. NEVER use any flammable chemicals in the sprayer.
- **Chemical interaction**. ALWAYS flush the sprayer before switching chemicals. Different chemicals may interact dangerously with each other.
- **Chemical storage**. ALWAYS store chemicals in a properly labeled container and in a secure location per the manufacturer's recommendations.
- **Health monitoring**. Monitor the health of operators who are frequently exposed to chemicals, as recommended by the chemical label or local/federal regulations.

Operation – Important Safety Information (continued)

Chemical Application Safety:

⚠ WARNING

- Caution must be used when spraying chemicals to avoid unsafe exposure to humans and the environment.
- Heed the warnings below and follow all instructions carefully.

Before Spraying

- **Soak**. ALWAYS soak vegetation in the area surrounding the work zone before spraying bleach. Bleach can kill vegetation if not soaked thoroughly.
- **Sprayer prep**. ALWAYS inspect and prepare the sprayer before use according to the directions provided in this manual.
- **Keep sprayer off**. Do not turn on power to the sprayer until ready to spray in order to avoid unintentional spray release.
- **Wind speed**. NEVER spray when wind speed exceeds 5 MPH in order to minimize spray drift.
- **Clear area/post**. ALWAYS keep the work area clear of people and pets. POST warning notices to restrict access by the public for the period recommended on chemical label.
- **Operator age**. You must be 16 years of age or older to operate this sprayer. Some chemicals are especially toxic to children.

During Spraying

- **Over application**. DO NOT over-apply chemicals. Apply at a rate recommended by chemical manufacturer. Excess chemical can be dangerous to humans, damage desirable plants, and contaminate soil and water sources.
- **Never point gun**. NEVER point the spray gun at people or animals.
- **Children/pets**. ALWAYS exercise extra caution when spraying near areas accessible to children and pets.
- **Eating/smoking**. DO NOT eat, drink, smoke, rub your eyes, or touch any part of your bare skin while handling chemicals and spraying.
- **Heat/flames**. DO NOT spray near open flames or sources of heat.
- **Spills**. ALWAYS clean up spills immediately per instructions on the chemical label.
- **Unattended**. ALWAYS turn off power to sprayer and relieve system pressure before leaving sprayer unattended.
- **Troubleshooting**. ALWAYS refer to the safety instructions in the Troubleshooting Section before attempting any repairs.

After Spraying

- **Soak.** ALWAYS soak vegetation in the area surrounding the work zone after spraying bleach. Bleach can kill vegetation if not soaked thoroughly.
- **Clean sprayer**. ALWAYS clean the sprayer immediately after use according to the directions provided in this manual.
- **Decontaminate**. ALWAYS decontaminate yourself immediately after you are finished spraying and handling chemicals. Wash all exposed areas of the body with soap and water and remove and launder clothing.
- **Chemical disposal/storage**. ALWAYS dispose of or store remaining chemicals properly as recommended on the chemical label.

Operation – Important Safety Information (continued)

Chemical accident procedures:

⚠ WARNING

Before you fill the sprayer, review the following information with regard to handling accidents. Chemical spills, sprayer leaks, personal contamination, and poisoning are accident situations which you may encounter. All require an immediate response – See instructions below**.**

Sprayer leak	**In the event that the sprayer develops a leak while spraying chemicals, you must *immediately stop spraying*.** Turn off power to the sprayer and follow the directions below, as applicable. **If the leak is internal in the pump cartridge, the pump will automatically shut off, and the indicator light will turn on.** The pump will not turn back on until the pump cartridge has been replaced and there is no leaking present.
Bodily chemical contact	**Personal contamination can occur when chemicals splash, spill, or spray directly onto a person.** 1. Follow the emergency first aid instructions on the chemical label listed in the First Aid or Statements of Practical Treatment sections. General procedures for contact with bleach or surfactant includes: a) Eyes – immediately rinse with water for 15 minutes. If irritation persists, contact a doctor. b) Skin – rinse all contaminated skin surfaces with water. If irritation persists, contact a doctor. c) Clothing – remove contaminated clothing. Dispose of heavily contaminated clothing per chemical label instructions. 2. Seek medical advice if instructed on the label, or if the victim experiences symptoms of harmful effects such as burning, swelling, nausea, chest pain, difficulty breathing, dizziness, or confusion. When seeking medical advice, be sure to bring the chemical product label.
Poisoning by ingestion or inhalation	**In case of poisoning from ingestion or inhalation**: IF THE VICTIM HAS COLLAPSED OR IS NOT BREATHING, ***CALL 911***. Otherwise: 1. If you are the victim, immediately seek assistance from nearby personnel because you may become incapacitated. 2. Follow the emergency first aid instructions on the chemical label in the First Aid or Statement of Practical Treatment sections. General procedures for ingestion or inhalation of bleach or surfactant includes: c) For ingestion: Drink a glass of water. Call a doctor or poison control center. DO NOT induce vomiting unless instructed to do so by a doctor or poison control center. d) For inhalation: Immediately move to fresh air. 3. Call a poison control center for further advice. **In the U.S., call 1-800-222-1222 to be automatically linked to the nearest certified poison control center.** Have the chemical label available for reference.

Operation – Important Safety Information (continued)

Chemical spills	**Chemical spills must be quickly contained and properly cleaned up.** Refer to the chemical label for any specific clean-up instructions with regard to the chemical spilled. General procedures include: 1. **Control** the spill by stopping the source of the spill. If the source of the spill is a container leak, place the leaking container in a larger, watertight container. Keep unprotected people away from the spill site. 2. **Contain** the spill so that it does not spread and get into water sources. Use a shovel or other tool to make a dike around the spill with soil, sod, or absorbent material. 3. **Clean up** the spill immediately. Absorbent materials like ground corncobs or pet litter should be spread on the spill area to soak up the chemical. The contaminated material should then be shoveled into a leak proof container. Do not flush the spill area with water until you receive advice as directed below. 4. **Seek additional advice** from the chemical manufacturer and your state's pesticide regulatory agency regarding decontamination of the spill site: - *Chemical manufacturer*. The chemical label provides contact information for the chemical manufacturer. - *State pesticide regulatory agency*. In the U.S., call the National Pesticide Information Center at 1-800-858-7378 for assistance in determining how to contact your state's pesticide regulatory agency.

Operation – Preparing the Sprayer for Each Use

If the sprayer has been used previously, it must be prepared BEFORE EACH SUBSEQUENT USE.

⚠ WARNING

- Read instructions below carefully for inspecting and preparing the sprayer.
- Damaged or clogged equipment could result in leaks or uncontrolled spray.
- Leaks could result in injury to the operator or bystanders from chemical exposure or cause damage to the environment.

Important safety rules:

- **Power off.** Make sure all power is OFF before cleaning, inspecting, or servicing the sprayer.
- **Guards / shields.** Make sure all guards and shields are replaced after servicing the sprayer.
- **Replacement parts.** If a part needs replacement, only use parts that meet the manufacturer's specifications. Replacement parts that do not meet specifications may result in a safety hazard or poor operation of the sprayer.

1. Ensure tank empty	**Ensure the sprayer has been thoroughly flushed and drained of all residual chemicals from prior use.**
2. Clean suction strainer	**Clean the suction strainer of any chemical residue.** It is important to clean the suction strainer before and after each use to ensure it is not clogged and to prevent residual chemicals from contaminating sprayer contents. a) USING RUBBER GLOVES, remove strainer bowl. b) Run the suction strainer under fresh water to remove debris. c) Replace the suction strainer bowl. 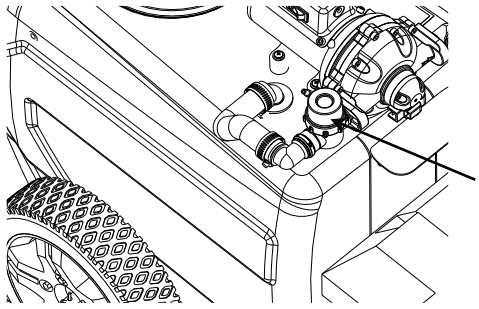 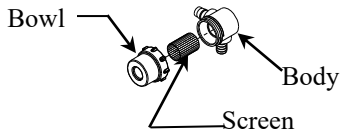 Suction strainer Exploded view
3. Inspect & repair	**Inspect and test the sprayer thoroughly**: a) Inspect hoses for exposed mesh and holes. Replace all worn or damaged hoses. b) Inspect tank and fittings for cracks and leaks. Replace all damaged fittings with original NorthStar parts. c) Check to be sure the retaining nut on the gun nozzle is tight. d) Check to be sure that all other nuts, bolts, and screws are tight. e) Partially fill tank with plain water and spray to test for leaks. Repair as needed. ***IMPORTANT: After any repair work has been done, ALWAYS test for leaks with water one final time before using.***

Operation – Using the Sprayer

Step 1: Assess wind conditions and clear work area.

Before you decide to spray, you must determine whether wind conditions are suitable. You must also restrict access to the work area to ensure the safety of bystanders.

⚠ WARNING

Do not spray if wind speeds are greater than 5 MPH or if there are bystanders in the intended spray area.

1. Assess wind speed	**Assess weather conditions to ensure that it is not too windy to spray.** **DO NOT SPRAY if wind speeds are greater than 5 MPH.** *Visible indication of wind speed*: If leaves are in constant motion or there is any branch movement, DO NOT spray because the wind is too strong.
2. Clear work area	**Clear the work area of all bystanders and pets.** Restrict access by the public for the period recommended on chemical labels.
3. Prep work area	**Complete the following before spraying:** a) Cover all electrical outlets and light fixtures on surfaces to be sprayed. b) Remove any decorations in proximity to spray area.

Operation - Using the Sprayer (continued)

Step 2: Fill the sprayer.

⚠ WARNING

- ALWAYS wear personal protective equipment as directed on the chemical labels when handling chemicals.

- Long pants and sleeves, chemical resistant gloves, and eye protection are strongly recommended. Additional protective gear may be required depending on the particular chemical.

Fill the sprayer using the following steps:

1. Review safety information	**Review the Operation – Important Safety Information** section related to General Chemical Safety and Chemical Accident Procedures provided in this manual.
2. Choose safe mixing/ loading area	**Choose a safe mixing and loading area.** - Choose an outdoor, well-ventilated area away from unprotected people, animals, food, and other items that might become contaminated.
3. Wear personal protective equipment	**Wear personal protective equipment as directed on the chemical label. Goggles, gloves, long sleeves, and pants are recommended while mixing chemicals.** NOTE: Clothes may be damaged by bleach. 
4. Turn off sprayer	**Turn OFF power to the sprayer before filling.**
5. Remove fill cap	**Remove the fill cap located on top of the sprayer.** 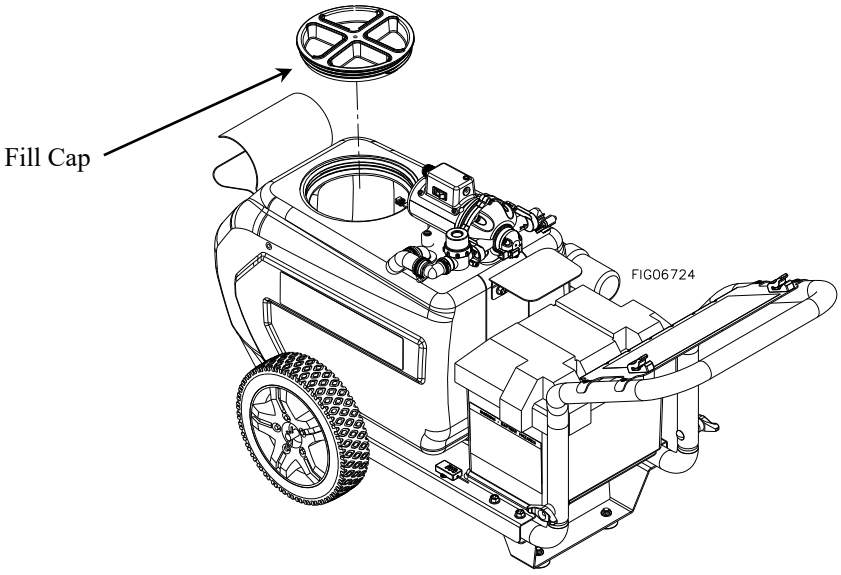
6. Ensure tank flushed	**Ensure tank is flushed of all chemicals from prior use**. - Chemicals can interact dangerously when mixed. Residue chemicals are also a health hazard.

Operation - Using the Sprayer (continued)

7. Check drain cap and battery charge

Before filling tank, ensure drain cap is securely tightened. Also check that the battery is fully charged by pressing the ON button on the battery monitor.

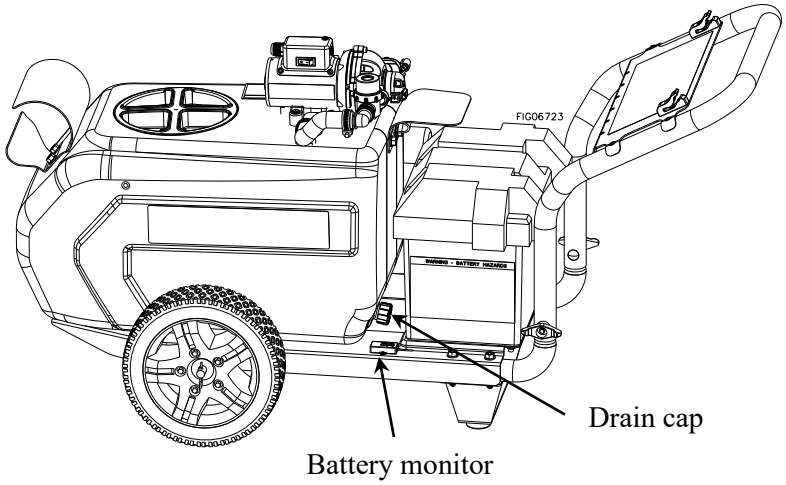

8. Fill tank

Add chemical to tank through fill cap:

a) Wear personal protective equipment while mixing. Goggles, gloves, long sleeves, and pants are recommended. NOTE: Clothes may be damaged by bleach.

b) Add to tank in this order:
   1. Household bleach (6% sodium hypochlorite concentration)
   2. NorthStar Max Cling Soft Wash Surfactant (NTE #81297 or #81298)
   3. Water

c) Recommended mix ratios

Soft Wash Mix	Surface to be Cleaned	Household Bleach	NorthStar Max Cling	Water
1%	Siding, screen enclosures	2 gallons	8 ounces	10 gallons
2%	Fences, decking	4 gallons	8 ounces	8 gallons
3%	Roofs, brick, stone, stucco, concrete, driveways	6 gallons	8 ounces	6 gallons

NOTICE: Never spray undiluted bleach. It must be mixed with water and NorthStar Max Cling Soft Wash Surfactant. Failure to do so could result in unforeseen damage to vegetation or the cleaning surface. Always test soft wash mix in an inconspicuous area to confirm compatibility.

NOTICE: Not for use on painted wood surfaces. Use only on hard, non-porous surfaces.

WARNING: Never exceed 3%, higher concentrations will increase the risk of damage to the sprayer. For difficult stains, repeat applications may be required.

9. Replace fill cap

Replace fill cap and tighten securely.

Operation - Using the Sprayer (continued)

Step 3: Operate the sprayer.

⚠ WARNING

- ALWAYS wear personal protective equipment as directed on the chemical label when spraying.
- Long pants and sleeves, chemical-resistant gloves, and eye protection are strongly recommended. Additional protective gear may be required depending on the particular chemical.

1. Review safety information	**Review the Operation – Important Safety Information** section related to Chemical Application Safety provided in this manual.
2. Wear personal protective equipment	**Wear personal protective equipment as directed on the chemical label. Goggles, gloves, long sleeves, and pants are recommended while mixing chemical.** NOTE: Clothes may be damaged by bleach. 
3. Turn on power	**Turn on the power to the sprayer.** 1. Verify the battery wire harness is connected to the pump power cord. 2. Turn the switch to the ON position. *Note: The pump will start automatically when power is turned on. The pump will cycle on and off as needed to retain pressure in the hose.*
4. Selecting nozzle	**The sprayer comes with two nozzles to select from: fan tip and long-throw.** The fan tip nozzle produces a large swath to cover large areas quickly. The long-throw nozzle is used to reach second story peaks and soffits. 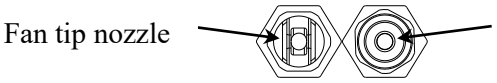
5. Attach nozzle to spray gun	**To attach spray nozzle to spray gun:** 1. Make sure the pump is off and the hose is depressurized. 2. To install the nozzle, pull the collar back and twist the nozzle firmly into the coupler on the end of the spray gun lance. 3. Release the collar, making sure it springs back and re-seats to its original (non-retracted) position. Check the connection by pulling on the nozzle to ensure a tight connection. If correctly inserted, nozzle will rotate but not pull out. 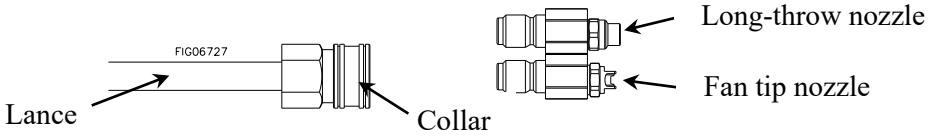
6. Before spraying	**Follow the steps below before spraying:** 1. Cover all electrical outlets and light fixtures and remove any decorations on surfaces to be sprayed. 2. Using fresh water from a garden hose, soak any vegetation that may come into contact with soft wash mix. If cleaning roof with gutters, soak area around downspouts with fresh water. NOTE: To eliminate the need for a ladder for difficult to reach places, such as tall roofs, use the NorthStar telescoping wand (NTE #81140). To reduce fatigue, improve spray precision, and improve productivity while using a telescoping wand, use with NorthStar tripod (NTE #157143).

Operation - Using the Sprayer (continued)

7a. Spraying roofs with soft wash mix

Follow the steps below for spraying a roof:

1. Using a 3% mix (see table), spray roofs from top to bottom.

Soft Wash Mix	Household Bleach	NorthStar Max Cling	Water
3%	6 gallons	8 ounces	6 gallons

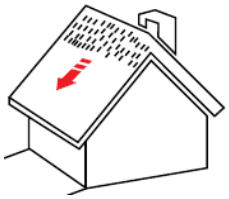

2. Spray in 10-foot-wide sections, only applying enough to get the surface wet.
3. Let the chemical dwell for approx. 10 minutes, but do not let the chemical dry on the surface. While the chemical is dwelling, the previous section can be rinsed.

7b. Spraying siding with soft wash mix

Follow the steps below for spraying siding:

1. Using a 1% mix (see table), spray siding from bottom to top.

Soft Wash Mix	Household Bleach	NorthStar Max Cling	Water
1%	2 gallons	8 ounces	10 gallons



2. Spray in 10-foot-wide sections, only applying enough to get the surface wet.
3. Let the chemical dwell for approx. 10 minutes, but do not let the chemical dry on the surface. While the chemical is dwelling, the previous section can be rinsed.

7c. Spraying fences and decking with soft wash mix

Follow the steps below for spraying fences or decking:

1. Using a 2% mix (see table), spray fences from bottom to top; spray flat surfaces (decking floor) starting on the far side and working back towards the sprayer.

Soft Wash Mix	Household Bleach	NorthStar Max Cling	Water
2%	4 gallons	8 ounces	8 gallons

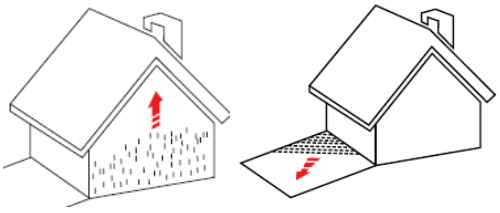

2. Spray in 10-foot-wide sections, only applying enough to get the surface wet.
3. Let the chemical dwell for approx. 10 minutes, but do not let the chemical dry on the surface. While the chemical is dwelling, the previous section can be rinsed.

Operation - Using the Sprayer (continued)

8. Rinsing	**After spraying rinse all surfaces and vegetation** 1. Using fresh water from a garden hose, rinse any vegetation that may have come into contact with soft wash mix. 2. Rinse surfaces from top to bottom. Rinse until there are no visible suds on the cleaned surface.  **To extend the life of the bleach pump system's replaceable pump cartridge:** 1. Fill tank with fresh water. 2. Remove spray nozzle from gun and pump fresh water through the system, discharging spray onto a hard surface such as a driveway. 3. Do not let the pump/sprayer freeze. **NOTE:** The pump cartridge is a wear item and will fail in time. There are two failure modes: 1.) Decreased performance or 2.) An internal leak (red LED light on motor illuminates). See instructions in the **Maintenance** section for replacing the pump cartridge.
9. Leaving sprayer unattended	**If the sprayer must be left unattended at any time**: a) Disconnect power to the sprayer. b) Relieve system pressure by depressing the gun trigger.
10. Discontinue use if clogged or inoperative	**If the sprayer becomes clogged or inoperative during use, *discontinue use immediately*.** - DO NOT attempt to service while chemicals are in the sprayer and power is connected. - Return to service area to review instructions for troubleshooting before attempting to service.

Operation - Using the Sprayer (continued)

Step 4: Clean sprayer and decontaminate after use.

When finished using the sprayer, it is important to clean the sprayer and decontaminate yourself. Do not store the sprayer with chemicals in the tank, as it is unsafe and could also result in damage to the equipment.

⚠ WARNING

- Clean-up and decontamination procedures must be followed after each use.
- Improper equipment clean-up and disposal of chemicals can result in dangerous chemical exposure to humans and the environment, as well as equipment damage.
- Personal decontamination is required after spraying to minimize unsafe exposure to chemicals and potential illness.

1. Drain tank	**If there is excess chemical left in the tank, drain the tank:** a) Disconnect power to the sprayer and relieve system pressure by depressing the gun trigger. b) Find a suitable container in which to drain the unused chemical. Place it under the tank drain hole. c) While wearing rubber gloves, eye protection, and all other required personal protective equipment, remove the drain cap and allow chemical to drain into container. d) When tank stops draining, replace drain cap. Tighten securely.
2. Chemical disposal	**Properly store or dispose of unused chemical:** a) If the unused chemical is to be stored for future use: Store all unused chemical in its original, or a suitably marked, container in a secure location out of the reach of children and animals. b) If remaining chemical is to be disposed: Properly dispose of the remaining chemical and its container per the chemical manufacturer's recommendation and according to local hazardous waste disposal regulations.
3. Flush sprayer	A general procedure is as follows: a) Add 10 gallons of fresh water to the tank. b) Reconnect power to the sprayer. c) Remove nozzle and operate the spray gun. Discharge all rinse water onto a hard surface such as a driveway. d) After flushing, disconnect power to the sprayer and be sure all system pressure is relieved by squeezing the gun trigger. e) Remove inlet strainer screen from pump inlet and thoroughly rinse with fresh water.

Storage

When not in use, store the sprayer indoors. For long term or winter storage, prepare the sprayer by running **RV antifreeze** (DO NOT USE automotive antifreeze) through the system. This will keep internal parts lubricated, protect against corrosion, and keep the unit from freezing.

CAUTION

- The sprayer will be damaged if it freezes.
- Protect the sprayer from freezing during storage by following the instructions below.

Preparing for storage:

1. Flush with water	Fill the tank with fresh water and run through the system. Operate the spray gun until the system is completely flushed. **DO NOT add antifreeze before flushing the system as bleach can react with antifreeze.**
2. Add antifreeze	Pour 1 gallon of **RV antifreeze** (DO NOT USE automotive antifreeze) into the tank. *Note: RV antifreeze is non-toxic and biodegradable and generally safer for the environment than automotive antifreeze.*
3. Spray briefly	Turn on the pump motor and squeeze the gun trigger briefly until fluid sprays.
4. Rotate handle for compact storage	The handle can be rotated by removing the t-handle knobs, lifting the handle up and rotating 180°, sliding handle back down, and reinstalling the t-handle knobs. The storage position is shown in the image below. 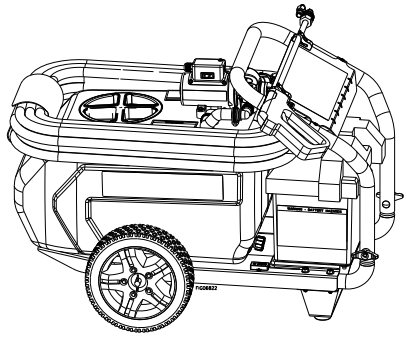

Removing from storage:

1. Drain	Drain the antifreeze left in the tank through the tank drain hole into a suitable container.
2. Flush with water	Fill the tank with fresh water and run through the system. Operate the spray gun until the system is completely flushed. Be sure to set up containers to capture the antifreeze flush water. **DO NOT add bleach back into the sprayer before flushing the system as bleach can react with antifreeze.**
3. Disposal	Dispose of the antifreeze and flush water properly.

Troubleshooting

⚠ WARNING

Before troubleshooting or attempting to service, read the following safety rules to avoid accidental exposure to chemical and also risk of electric shock.

Note: *A reserve, clean container capable of holding at least 13 gallons should be kept for use when the sprayer tank needs to be emptied temporarily for repairs. It is advisable to purchase a reserve tank from Northern Tool and Equipment for use in these circumstances. The container should be properly labeled as to its contents if it is used. In addition, it may be advisable to empty the tank contents using a transfer pump if the tank drain hole is inaccessible.*

Before attempting to service the sprayer:

1. Personal protective equipment	**Wear personal protective equipment as directed on the chemical label while servicing your sprayer.**
2. Review troubleshooting table	**Review the troubleshooting table below for the type of problem you are experiencing.** However, DO NOT attempt to repair until the steps listed below are followed.
3. Empty and flush	**If the cause listed for your problem is clogged intake tube, clogged suction strainer, or worn spray gun nozzle:** empty the tank and flush the sprayer with water as directed in the section, **Operation – Step 4**. *- In order to avoid accidental exposure to chemicals, never attempt to unclog the intake tube or suction strainer, or service the spray gun nozzle, until the tank has been emptied and the sprayer flushed with water.*
4. Disconnect power/relieve pressure	**Disconnect power to the sprayer and be sure all system pressure is relieved by squeezing the gun trigger.**
5. Perform repairs	**Follow the directions provided in the troubleshooting table to repair the sprayer.** See the **Maintenance** section for instructions to replace pump cartridge. *NOTE: Never try to unclog the sprayer nozzle by blowing through it.*
6. Test after servicing	**After servicing, ALWAYS test the sprayer for leaks with plain water before using.**

PROBLEM	CAUSE	SOLUTION
Pump will not turn on	Pressure switch failure	Replace pressure switch
	Bad electrical connection	Check battery connections are clean, tight, and installed with correct polarity (red positive to red positive and black negative to black negative)
	Fuse blown	Replace fuse
	Short in wires	Check condition of wires
	Low voltage	Check voltage with battery monitor
Pump will not turn on and LED light is on	Leak inside pump cartridge	Replace pump cartridge
Low pressure	Worn spray gun nozzle	Replace spray gun
	Worn pump cartridge	Replace pump cartridge
Low flow	Clogged intake tube	Remove obstruction
	Clogged suction strainer	Clean suction strainer
	Low voltage	Check voltage with battery monitor
	Worn pump cartridge	Replace pump cartridge
Poor spray distribution	Clogged intake tube	Remove obstruction
	Suction strainer clogged	Clean suction strainer
	Worn spray gun nozzle	Replace spray gun
	Worn pump cartridge	Replace pump cartridge
Pump cycles while not spraying	Leak in the system	Tighten leaking hose clamps or fittings, replace spray gun

Maintenance

In the event of an internal pump cartridge leak, the pump will shut off to protect the motor and the LED light will turn on to indicate the problem.

To repair the pump, use 4.0 GPM replacement pump cartridge A157147.

To remove the old pump cartridge from the motor:

1. Disconnect power to the pump and be sure all system pressure is relieved.
2. Disconnect quick connect fittings from pump ports.
3. Disconnect both red wires from the pressure switch.
4. Disconnect black plug from the pump motor.
5. Using the supplied hex wrench, unthread the **silver** mounting screws (black screws can remain installed).
6. Slide the pump cartridge off the shaft of the motor. Discard the pump cartridge.
7. Dry any wet areas of the motor before installing new pump cartridge.

To install the new pump cartridge:

1. Line up the holes in the pump cartridge to the holes in the motor face.
2. Slide the pump cartridge onto the shaft of the motor.
3. Using the supplied hex wrench, secure the pump cartridge using the new mounting screws supplied with the pump cartridge.
4. Attach the red wire from the back of the motor to the back spade of the pressure switch.
5. Attach the red wire from the 2-pin connector to the front spade of the pressure switch.
6. Attach the black plug from the pump cartridge to the pump motor.
7. Reconnect power to the pump and reconnect quick connect fittings.
8. Test system for leaks with water.

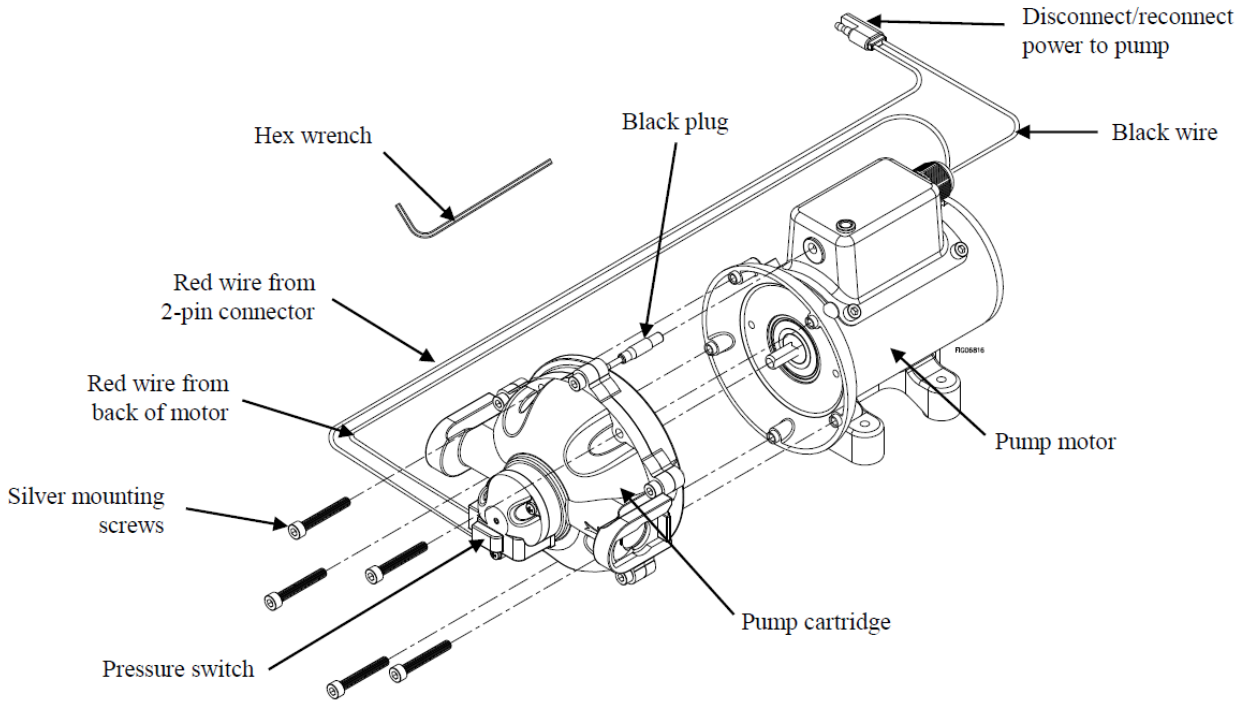

Specifications

Electrical System Requirements	
Electrical connection	12 VDC
Amp draw from pump	13.0 Amps
Sprayer Specifications	
Maximum GPM	4.0 GPM (15.1 Liters/min.)
Maximum Pressure	60 PSI (4.1 Bar)
Tank Maximum Capacity	13 Gallons (49.2 Liters)
Overall Dimensions – Operating position	47.3" x 19.9" x 25" (120cm x 50.5cm x 63.5cm)
Overall Dimensions – Storage position	34.8" x 19.9" x 25" (88.5cm x 50.5cm x 63.5cm)
Dry Weight/Full Weight (filled with water) *Weights do not include battery	67 lbs./171 lbs. (30.4kg /77.6kg)

The noise emissions from this product do not exceed 70dB(A).

Note: Pumping any petroleum-based fluid (gasoline, diesel, kerosene, or oil) will severely damage the pump.

The manufacturer reserves the right to make improvements in design and/or changes in specifications at any time without incurring any obligation to install them on units previously sold.

Any Questions, Comments, Problems, or Parts Orders
Call NorthStar Product Support at 1-800-270-0810

Exploded View and Parts Breakdown – 157140 – Rev E.1

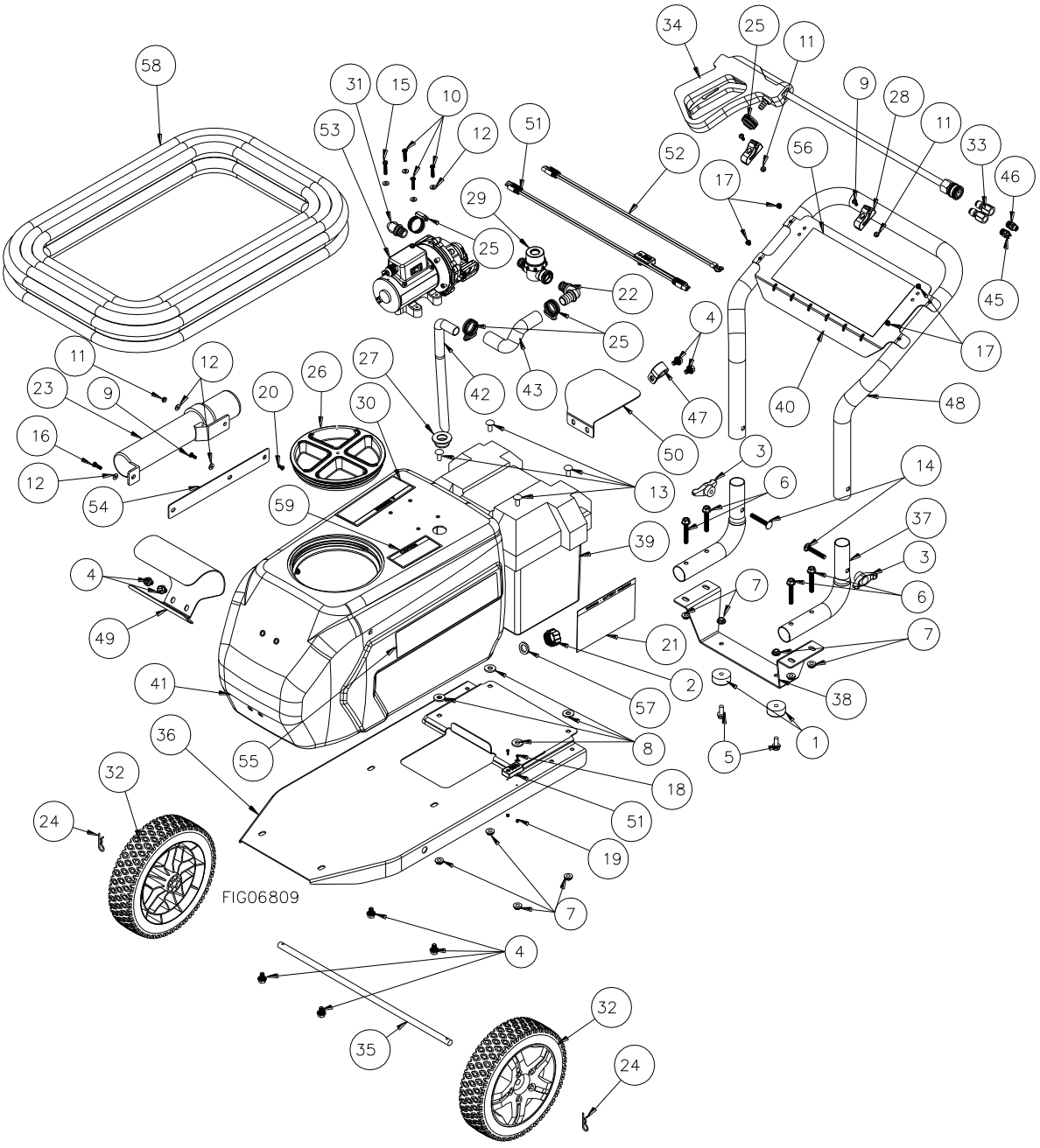

Exploded View and Parts Breakdown – 157140 – Rev E.1

Ref #	Part #	Description	Qty
1	2215	Rubber foot	2
2	37680	Drain cap	1
3	38578	T-handle knob	2
4	82014	Bolt, 5/16" -18 x 1/2"	8
5	82015	Bolt, 5/16" -18 x 3/4"	2
6	82018	Bolt, 5/16" -18 x 2"	4
7	82019	Nut, 5/16" -18 serr. flange	10
8	82021	5/16" USS Flat washer	4
9	82059	Screw, #10-24 x 1/2"	3
10	82061	Screw, #10-24 x 28mm	3
11	82065	Nut, #10-24 nyloc	3
12	82068	#10 Flat washer	7
13	82088	Bolt, 5/16" -18 x 3/4" carriage	4
14	82233	Bolt, 5/16" -18 x 2" carriage	2
15	82617	Screw, #10-24 X 32mm	1
16	82616	Screw, #10-24 X 15mm	1
17	82649	Rivet	4
18	801035	Screw, M2.5 x 10mm	2
19	801036	Nut, M2.5 nyloc	2
20	801037	Screw, #10-24 X 1/2" flat head	1
21	782397	Decal, battery warning	1
22	787198	Fitting, QC x 3/4" HB	1
23	790471	Manual tube, mini	1
24	800438	Hairpin clip	2
25	793231	Hose clamp	4
26	794111	Sprayer cap w/ tether	1
27	798335	Grommet	1
28	52034	Gun clip	2
29	798855	Inlet strainer	1
30	777499	Decal, sprayer warning	1
31	799878	Fitting, QC x 5/8" HB	1
32	799882	Wheel, 10" flat free	2
33	799883	2-nozzle quick connect holder	1
34	799884	Spray gun	1
35	799900	Axle	1
36	799921	Base	1
37	799923	Handle receiver tube	2
38	799924	Leg	1
39	799925	Battery box	1
40	799929	Billboard	1
41	799933	Tank, 13-gallon	1
42	799935	Suction tube	1
43	799936	Hose, 3/4" inlet	1
44	-	-	-
45	799939	Nozzle, 25° fan, #40, 1/4" NPT	1
46	799940	Nozzle, straight stream, #40, 1/4" NPT	1
47	799947	Hose guide	1
48	799950	Handle	1
49	800006	Hose wrap, front	1
50	800016	Hose wrap, back	1
51	800037	Wire harness w/ battery monitor	1
52	800036	Pump power cord	1
53	157147	NorthStar 4062 Pump w/ Motor Armor	1
54	800244	Manual tube bracket	1
55	800465	Decal, NorthStar	1
56	800466	Decal, NorthStar billboard	1
57	800617	Drain cap washer	1
58	799885	Gun hose, 5/8" x 75' PVC	1
59	800763	Vegetation caution decal	1
N/A	800443	Soft wash system quick-start guide	1
N/A	800751	Hang tag	1

Pump Breakdown - Exploded View

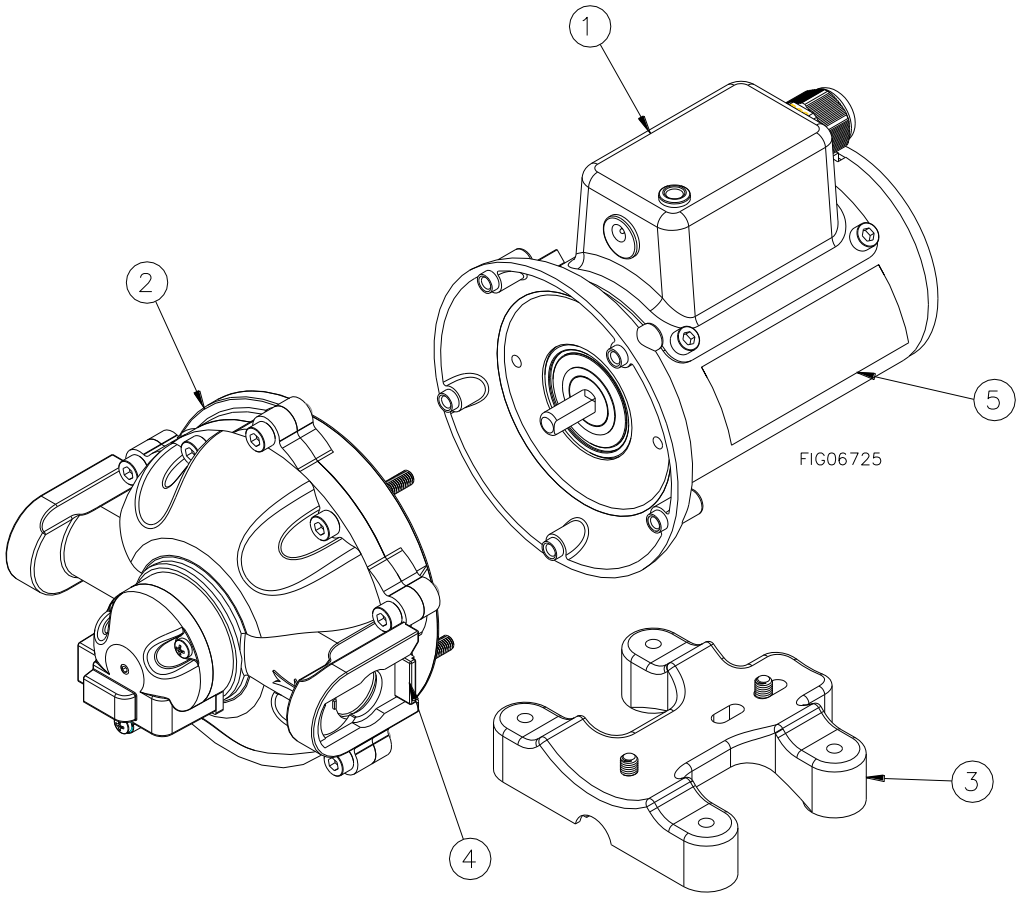

Ref #	Part #	Description	Qty
1	799641	Motor assembly	1
2	A157147	Pump cartridge	1
3	800428	Base plate assembly	1
4	784449	Quick connect clip, black	1
5	800090	Decal, pump branding	1
N/A	787381	Replacement fuse, 15A	1

Limited Warranty

Dear Valued Customer:

The NorthStar product you just purchased is built with the finest material and craftsmanship. Use this product properly and enjoy the benefits from its high performance. By purchasing a NorthStar product, you show a desire for quality and durability. Like all mechanical equipment this unit requires a due amount of care. Treat this unit like the high-quality piece of machinery it is. Neglect and improper handling may impair its performance. Please thoroughly read the instructions and understand the operation before using your product.

Limited Warranty

NorthStar shall warranty any piece of equipment manufactured, or parts of equipment manufactured, to be free from defects in material or workmanship for a period of 2 years for noncommercial/nonrental use and a period of 90 days for commercial/rental use from the date of purchase by user.

NorthStar shall warranty any wear item to be free from defects in material or workmanship for a period of 90 days from the date of purchase by user. This warranty applies to the original purchaser of the equipment and is non-transferable. Verification of purchase is the responsibility of the buyer. Parts will be replaced or repaired at no charge, except when the equipment has failed due to lack of proper maintenance, such as flushing the system after each use. Any misuse, abuse, alteration or improper installation or operations will void warranty. Determining whether a part is to be replaced or repaired is the sole decision of NorthStar.

NOTE: Some services performed by parties other than NorthStar may void warranty.

This warranty covers parts only. It will not provide for replacement of complete products due to defective parts. Components not manufactured by NorthStar are guaranteed by their manufacturer and can be serviced at factory-authorized locations near you. Any costs incurred due to replacement or repair of items outside of a NorthStar approved facility is the responsibility of the buyer and not covered under warranty. NorthStar can supply you with the service center location in your area.

This warranty specifically excludes the following; failure of parts due to damage caused by accident, fire, flood, windstorm, acts of God, applications not approved by NorthStar in writing, corrosion caused by chemicals, use of replacement parts which do not conform to manufacturer's specifications, and damage caused by vandalism. Additional exclusions: loss of running time, inconvenience, loss of income, or loss of use, including any implied warranty of merchantability of fitness for a specific use.

Warranty does not cover items subject to normal wear such as pump cartridges, hoses, spray guns, nozzles, filter elements, tires, receptacles or any part subject to direct physical contact by the public. This warranty does not cover any personal injury or damage to surrounding property caused by failure of any part.

This warranty is in lieu of any other warranty expressed or implied and NorthStar assumes no other responsibility or liability outside that expressed within this warranty.

Please fill in the following information and have it on hand when you call in on a warranty claim.

Customer Number: _____

Date of Purchase: _____

NorthStar Serial Number: _____

Item Number: _____

This page has intentionally been left blank.



Manufactured by
Northern Tool & Equipment Company, Inc.
Burnsville, Minnesota 55306
www.northerntool.com
Assembled in Mexico with foreign components