ANNOVI REVERBERI
The Power of Experience

K-PRO 2015 RLW

Version:
Serial number:
Code: **25177**

12/10/2015

400 V - 50 Hz

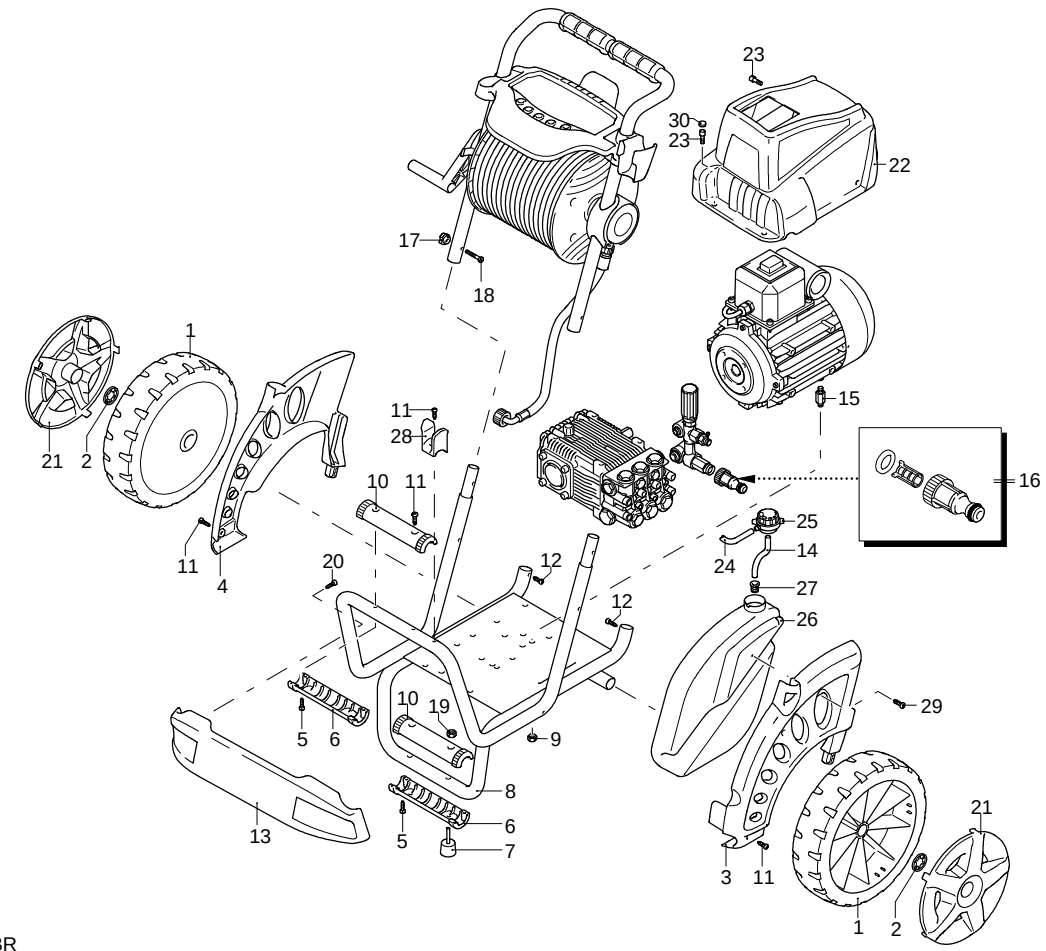

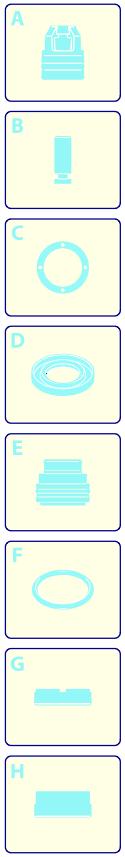

Validity	Pos.	Code	Description	Q
	1	3600140	Wheel	2
	2	3600180	Washer	2
	3	3600010	Guard	1
	4	3600020	Guard	1
	5	2000110	Screw	8
	6	3600040	Guard	2
	7	3600190	Vibration damper	2
	8	3600121	Frame	1
	9	380240	Nut	4
	10	3600200	Guard	2
	11	2060200	Screw	5
	12	2100300	Screw	2
	13	3600321	Guard	1
	14	2500330	Detergent hose	1
	15	2360580	Stud bolt	4
	16	3082130	Water coupling kit	1
	17	50019	Knob	2
	18	50037	Screw	2
	19	1060120	Nut	2
	20	2021780	Screw	2
	21	3600031	Guard	2
	22	3600301	Casing	1
	23	850250	Screw	3
	24	2500330	Detergent hose	1
	25	42113	Plug assembly	1
	26	3600250	Tank	1
	27	2000230	Filter	1
	28	3600070	Accessories carrier	1
	29	2360360	Screw	1
	30	1270910	Plug	2

UN_CE_0767-BR

ANNOVI REVERBERI
The Power of Experience

K-PRO 2015 RLW

Version:
Serial number:
Code: **25177**

12/10/2015

400 V - 50 Hz

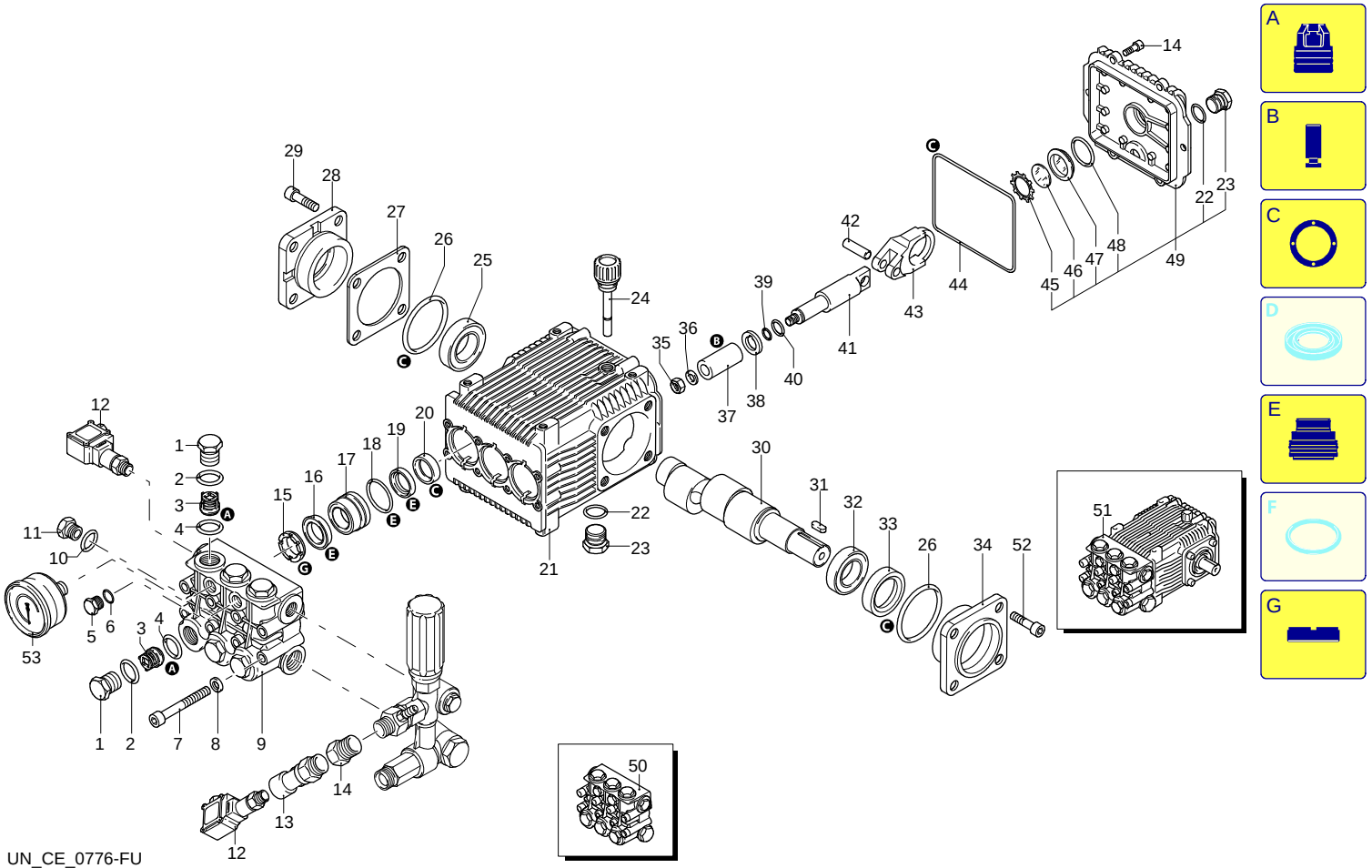

Validity	Pos.	Code	Description	Q
	1	960090	Plug	6
	2	960160	O-ring	6
	3	1389051	Complete valve	6
	4	880830	O-ring	6
	5	880581	Plug	1
	6	820510	O-ring	1
	7	820150	Screw	8
	8	1381850	Washer	8
	9	1381071	Head	1
	10	180101	O-ring	1
	11	820361	Plug	1
	12	51219	Pressure switch	2
	13	3160510	Fitting	1
	14	1123960	Fitting	1
	15	960110	Ring	3
	16	1382740	Water seal	3
	17	1380090	Piston guide	3
	18	961240	O-ring	3
	19	880330	Water seal	3
	20	1383130	Ring	3
	21	1382770	Pump body	1
	22	740290	O-ring	2
	23	1980740	Plug	2
	24	880130	Plug	1
	25	2280340	Bearing	1
	26	640030	O-ring	2
	27	1380120	Shim 0.10 mm	1
	27	1380130	Shim 0.20 mm	1
	27	1380530	Shim 0.25 mm	1
	27	1382810	Shim 0.05 mm	1
	28	1380050	Support	1
	29	850370	Screw	4
	30	2280060	Shaft	1
	31	1380520	Key	1
	32	1383140	Bearing	1
	33	180340	Ring	1
	34	1380040	Support	1
	35	962010	Nut	3
	36	962000	Washer	3
	37	1380940	Piston	3
	38	1380950	Plate	3
	39	600180	O-ring	3
	40	1080401	Ring	3
	41	1380920	Piston	3
	42	1380060	Pin	3
	43	1383050	Connecting-rod	3
	44	1780510	O-ring	1
	45	1260430	Ring	1
	46	1780690	Plate	1
	47	1260250	Level gauge	1
	48	1140450	O-ring	1
	49	1789010	Cover	1
	50	1389270	Head assembly	1
	51	20897	Pump assembly	1
	52	620610	Screw	4
	53	1381580	Pressure gauge	1
	A	2864	Valve kit	1
	B	2757	Piston kit	1
	C	1855	Oil seal kit	1
	E	1857	Water seal kit	1
	G	1829	Support ring kit	1

ANNOVI REVERBERI
The Power of Experience

K-PRO 2015 RLW

Version:
Serial number:
Code: **25177**

12/10/2015

400 V - 50 Hz

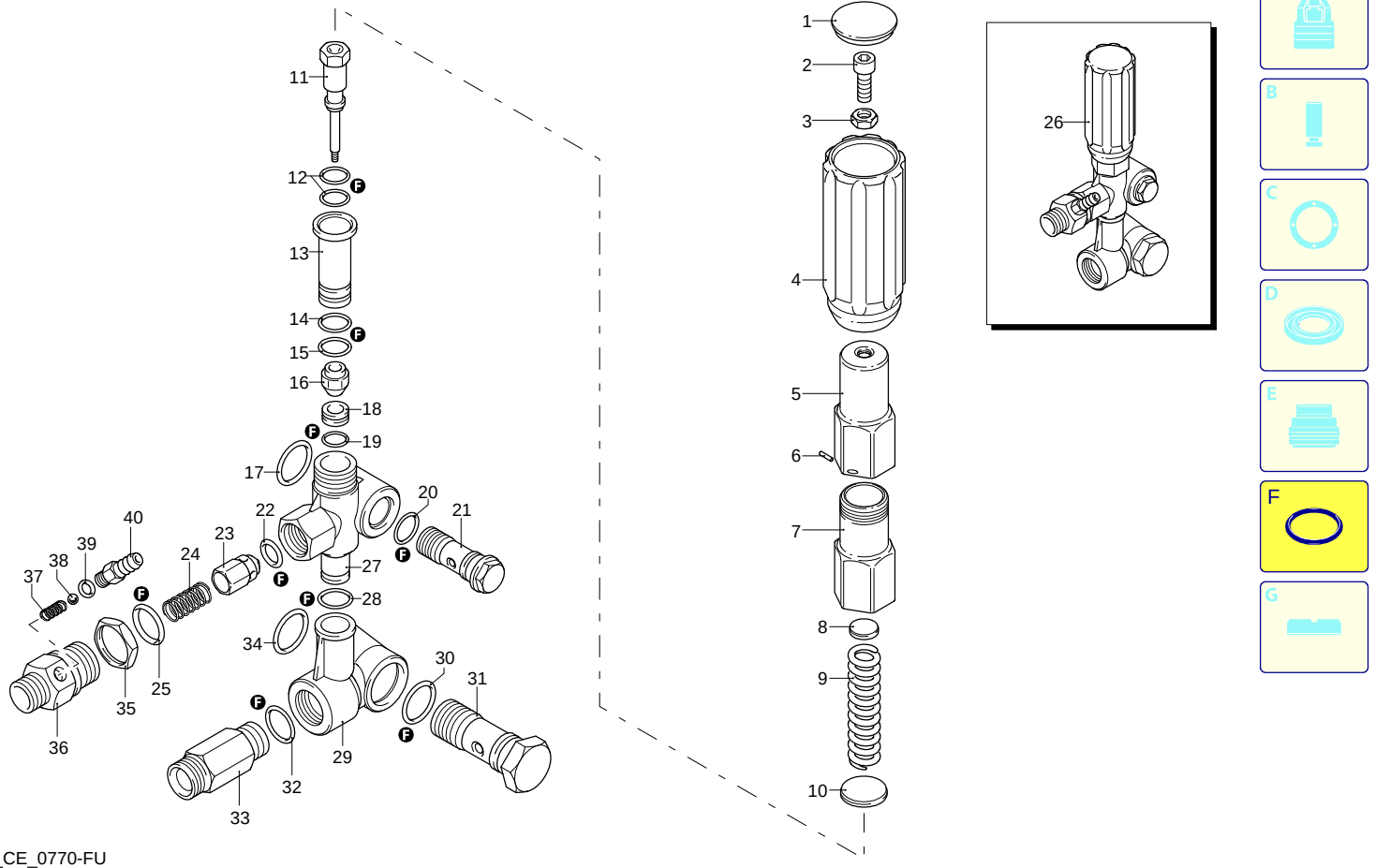

Validity	Pos.	Code	Description	Q
	1	1560580	Plug	1
	2	540290	Screw	1
	3	1660210	Nut	1
	4	1560400	Knob	1
	5	1560420	Screw	1
	6	1080070	Pin	1
	7	2260330	Guide	1
	8	2260140	Wobble plate	1
	9	1560350	Spring	1
	10	2260340	Wobble plate	1
	11	2260060	Piston	1
	12	2260100	O-ring	2
	13	2260040	Piston guide	1
	14	740290	O-ring	1
	15	394280	O-ring	1
	16	2260450	Shutter	1
	17	2260190	O-ring	1
	18	2260080	Seat	1
	19	1260740	O-ring	1
	20	390080	O-ring	1
	21	1540272	Screw	1
	22	1560150	O-ring	1
	23	1560100	Shutter	1
	24	1560140	Spring	1
	25	180101	O-ring	1
	26	24617	Valve	1
	27	2260170	Valve body	1
	28	390080	O-ring	1
	29	1540470	Suction fitting	1
	30	880270	O-ring	1
	31	2260420	Screw	1
	32	480440	O-ring	1
	33	1560900	Fitting	1
	34	1540630	O-ring	1
	35	1560510	Nut	1
	36	1560500	Fitting	1
	37	1560520	Spring	1
	38	1250280	Ball	1
	39	480480	O-ring	1
	40	1560490	Hose tail	1
	F	42598	Gasket kit	1

UN_CE_0770-FU

ANNOVI REVERBERI
The Power of Experience

K-PRO 2015 RLW

Version:
Serial number:
Code: **25177**

12/10/2015

400 V - 50 Hz

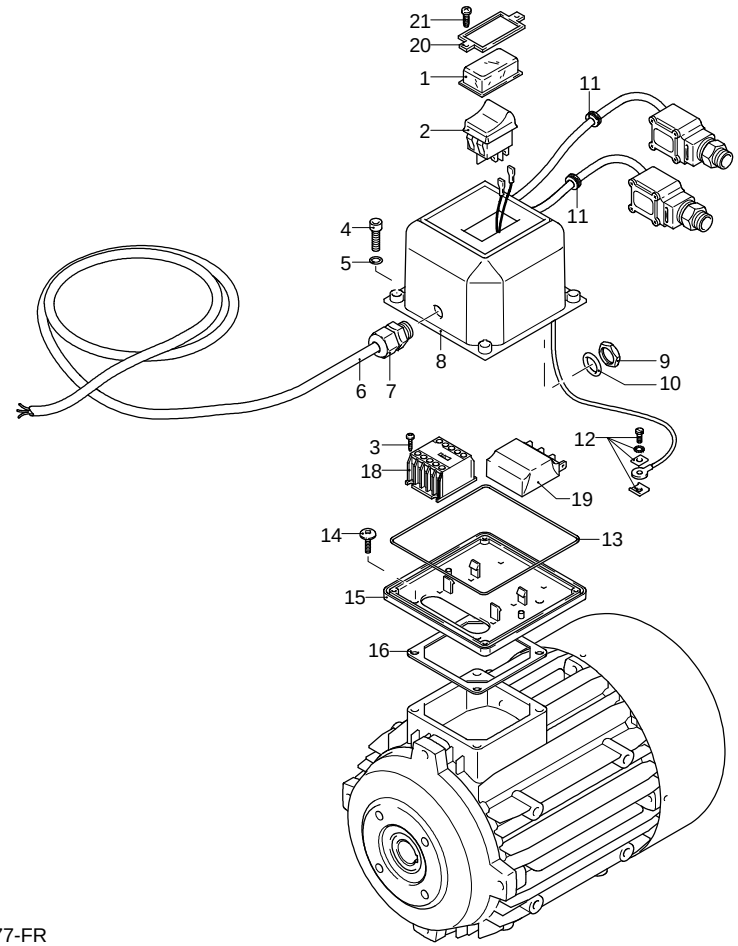

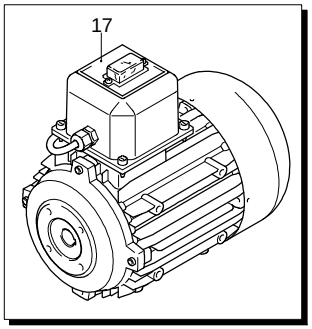

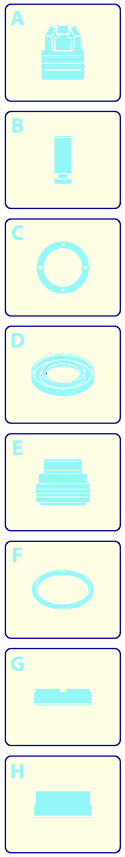

Validity	Pos.	Code	Description	Q
	1	1381980	Guard	1
	2	1682270	Switch	1
	3	1261570	Screw	4
	4	1261560	Screw	4
	5	1080190	O-ring	4
	6	1760640	Cable	1
	7	1382380	Cable gland	1
	8	1701070	Box	1
	9	1700590	Nut	1
	10	880270	O-ring	1
	11	2021480	Gland	2
	12	1269100	Clamp	1
	13	1940410	O-ring	1
	14	1470130	Screw	4
	15	1700080	Plate	1
	16	50068	Gasket	1
	17	44519	Motor	1
	18	2360950	Mini-contactor	1
	19	2360590	Board	1
	20	1381940	Frame	1
	21	1261551	Screw	2

UN_CE_0777-FR

ANNOVI REVERBERI
The Power of Experience

K-PRO 2015 RLW

Version:
Serial number:
Code: **25177**

12/10/2015

400 V - 50 Hz

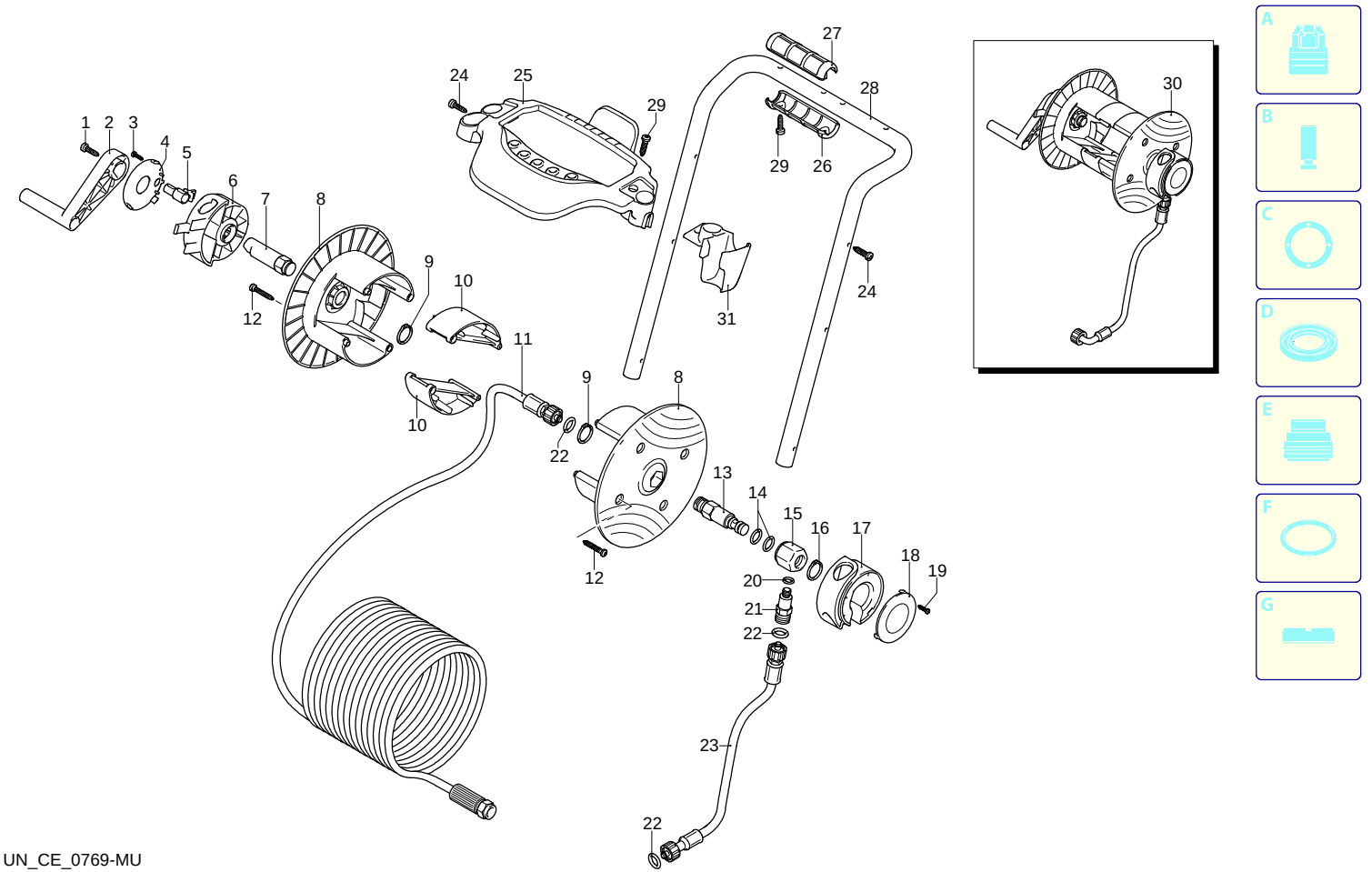

UN_CE_0769-MU

Validity	Pos.	Code	Description	Q
	1	2360360	Screw	1
	2	2360150	Lever	1
	3	2060200	Screw	1
	4	3600210	Cover	1
	5	3600100	Hook	1
	6	3600090	Bracket	1
	7	3600160	Hub pin	1
	8	2360230	Plate	2
	9	380420	Ring	2
	10	3580120	Spacer	2
	11	2360260	High pressure hose	1
	12	2021780	Screw	8
	13	3600240	Hub pin	1
	14	390080	O-ring	2
	15	3600220	Fitting	1
	16	480890	Ring	1
	17	3600080	Bracket	1
	18	3600110	Cover	1
	19	2060200	Screw	1
	20	820510	O-ring	1
	21	3600560	Fitting	1
	22	2000770	O-ring	3
	23	3600570	High pressure hose	1
	24	2060200	Screw	2
	25	3600050	Accessories carrier	1
	26	3580090	Knob	2
	27	3580180	Knob	2
	28	3600130	Frame	1
	29	2100300	Screw	5
	30	42659	Hose reel assembly	1
	31	3600060	Accessories carrier	1

ANNOVI REVERBERI
The Power of Experience

K-PRO 2015 RLW

Version:
Serial number:
Code: **25177**

12/10/2015

400 V - 50 Hz

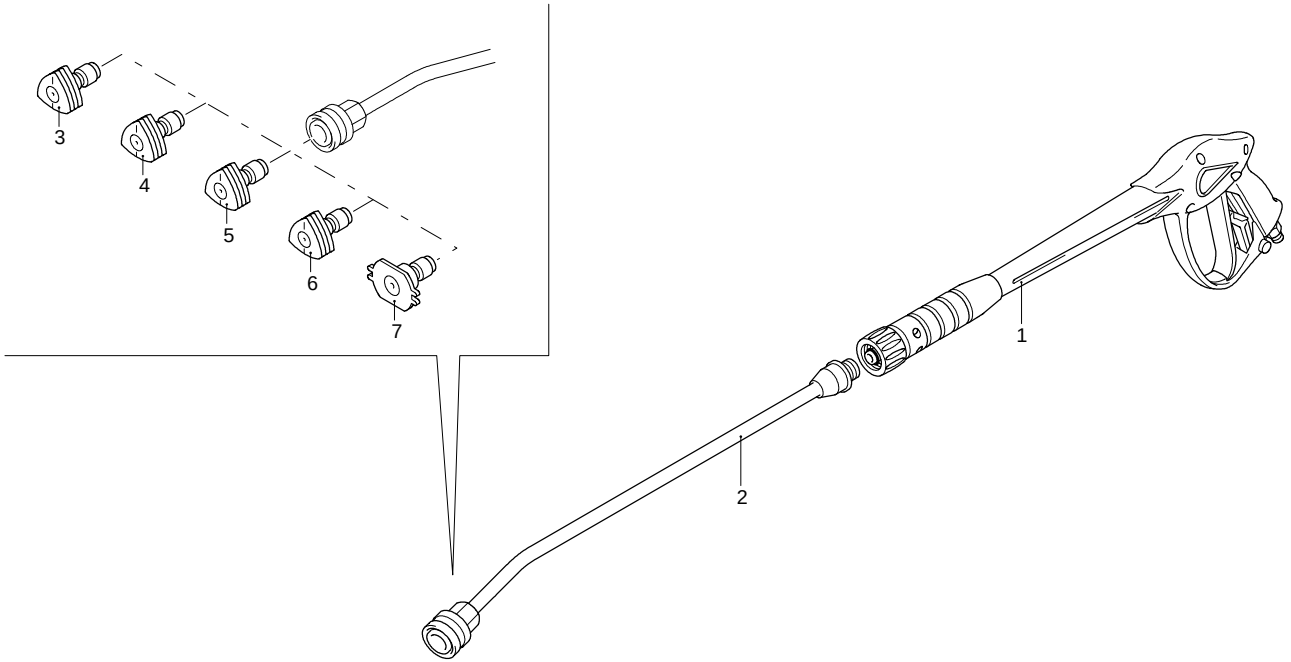

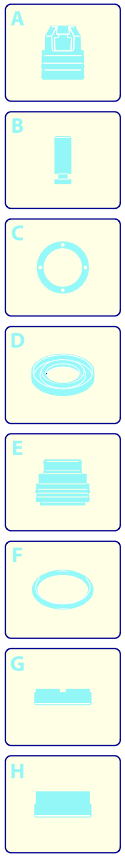

Validity	Pos.	Code	Description	Q
	1	41045	Gun	1
	2	3600650	Lance	1
	3	3600480	Nozzle (0°)	1
	4	3600490	Nozzle (15°)	1
	5	3600500	Nozzle (25°)	1
	6	3600510	Nozzle (40°)	1
	7	3600400	Nozzle (low pressure)	1

UN_CE_1451-CR