ANNOVI REVERBERI
The Power of Experience

HOT 2015N

Version:
Serial number:
Code: **24401**

29/03/2018

400 V - 50 Hz - 3 ~

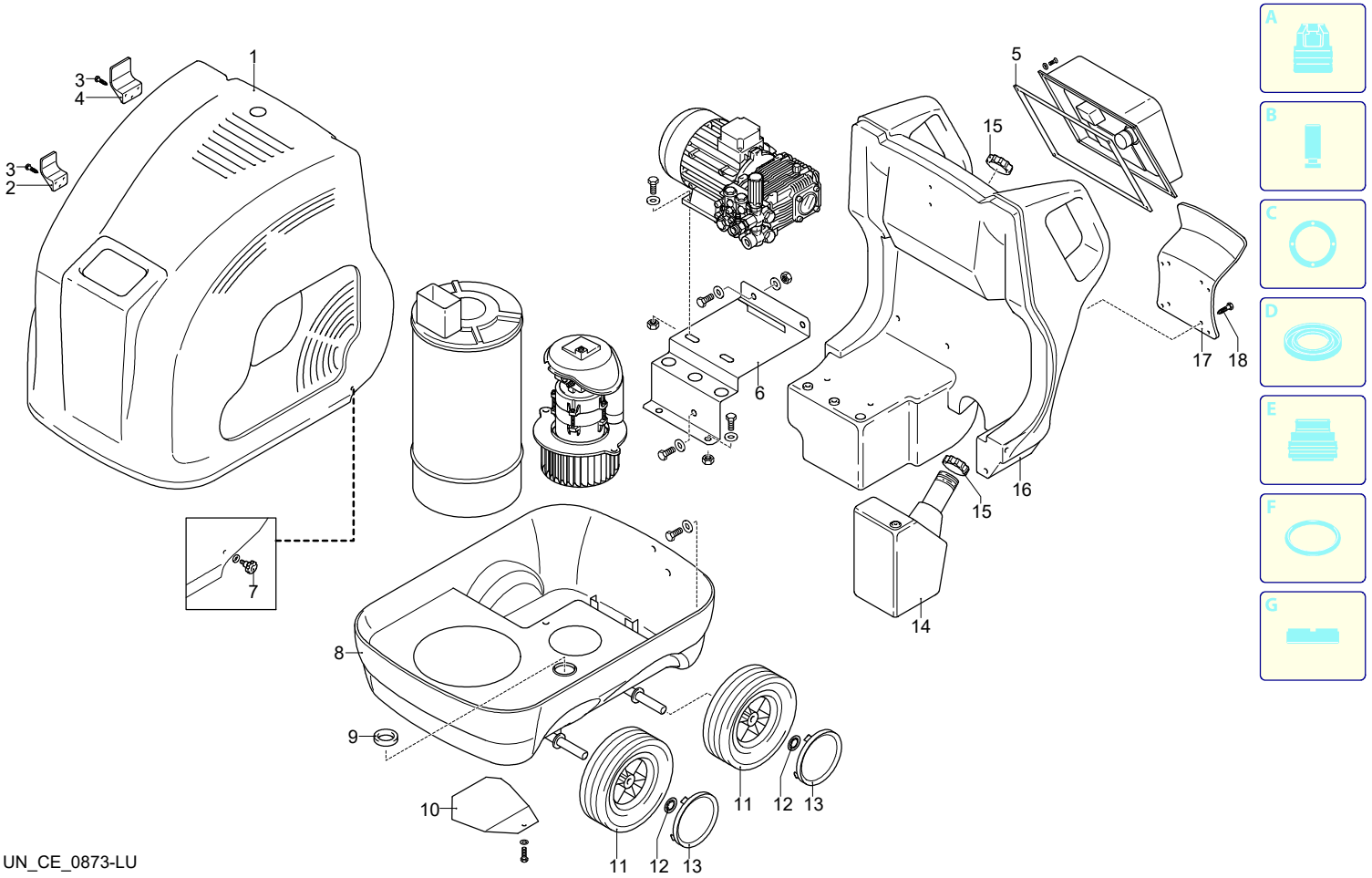

UN_CE_0873-LU

Validity	Pos.	Code	Description	Q
	1	3160740	Yellow casing	1
	2	3160100	Accessories carrier	1
	3	2100300	Screw	6
	4	3160110	Accessories carrier	1
	5	3163630	Gasket	1
	6	3160660	Support	1
	7	3163990	Knob	2
	8	3160700	Frame	1
	9	3161070	Gland	1
	10	3161900	Plate	1
	11	3164380	Wheel	4
	12	3162010	Ring	4
	13	3161940	Guard	4
	14	3161740	Tank	1
	15	3161920	Plug	2
	16	3161730	Tank	1
	17	3160090	Accessories carrier	1
	18	2360360	Screw	4

ANNOVI REVERBERI
The Power of Experience

HOT 2015N

Version:
Serial number:
Code: **24401**

29/03/2018

400 V - 50 Hz - 3 ~

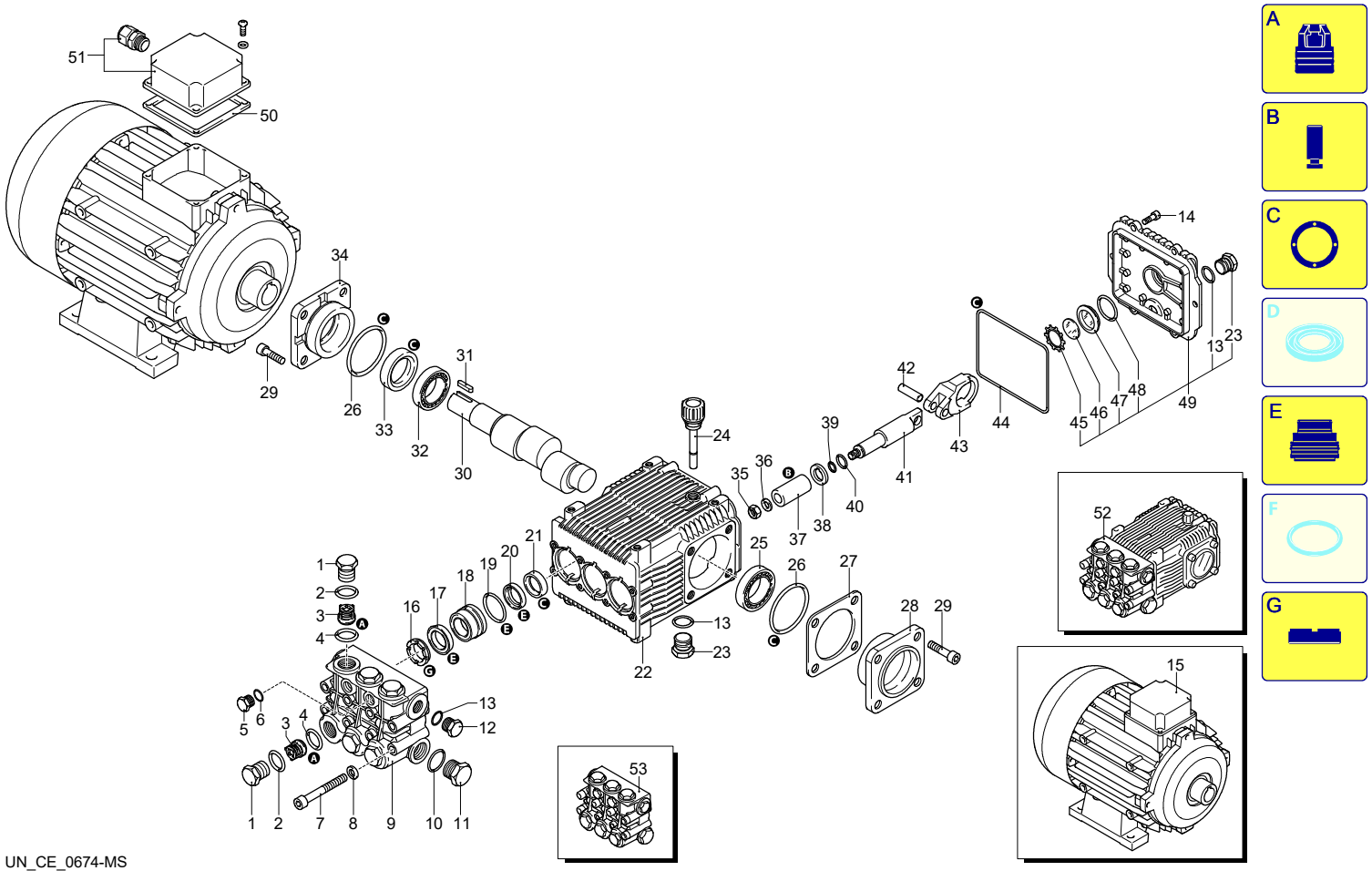

UN_CE_0674-MS

Validity	Pos.	Code	Description	Q
	1	960090	Plug	6
	2	960160	O-ring	6
	3	1389051	Complete valve	6
	4	880830	O-ring	6
	5	880581	Plug	2
	6	820510	O-ring	2
	7	820150	Screw	8
	8	1381850	Washer	8
	9	1381071	Head	1
	10	180101	O-ring	1
	11	820361	Plug	1
	12	1980740	Plug	1
	13	740290	O-ring	3
	14	1343510	Screw	6
	15	44807	Motor	1
	16	960110	Ring	3
	17	1382740	Water seal	3
	18	1380090	Piston guide	3
	19	961240	O-ring	3
	20	880330	Water seal	3
	21	1383130	Ring	3
	22	1382770	Pump body	1
	23	1980740	Plug	2
	24	880130	Plug	1
	25	2280340	Bearing	1
	26	640030	O-ring	2
	27	1380120	Shim 0.10 mm	1
	27	1380130	Shim 0.19 mm	1
	27	1380530	Shim 0.25 mm	1
	27	1382810	Shim 0.05 mm	1
	28	1380050	Support	1
	29	850370	Screw	8
	30	2280060	Shaft	1
	31	1380520	Key	1
	32	1383140	Bearing	1
	33	180340	Ring	1
	34	1380040	Support	1
	35	962010	Nut	3
	36	962000	Washer	3
	37	1380940	Piston	3
	38	1380950	Plate	3
	39	600180	O-ring	1
	40	1080401	Ring	3
	41	1380920	Piston	3
	42	1380060	Pin	3
	43	1383050	Connecting-rod	3
	44	1780510	O-ring	1
	45	1260430	Ring	1
	46	1780690	Plate	1
	47	1260250	Level gauge	1
	48	1140450	O-ring	1
	49	1789010	Cover	1
	50	50068	Gasket	1
	51	50069	Box	1
	52	22953	Pump assembly	1
	53	1389115	Head assembly	1
	A	2864	Valve kit	1
	B	2757	Piston kit	1
	C	1855	Oil seal kit	1
	E	1857	Water seal kit	1
	G	1829	Support ring kit	1

ANNOVI REVERBERI
The Power of Experience

HOT 2015N

Version:
Serial number:
Code: **24401**

29/03/2018

400 V - 50 Hz - 3 ~

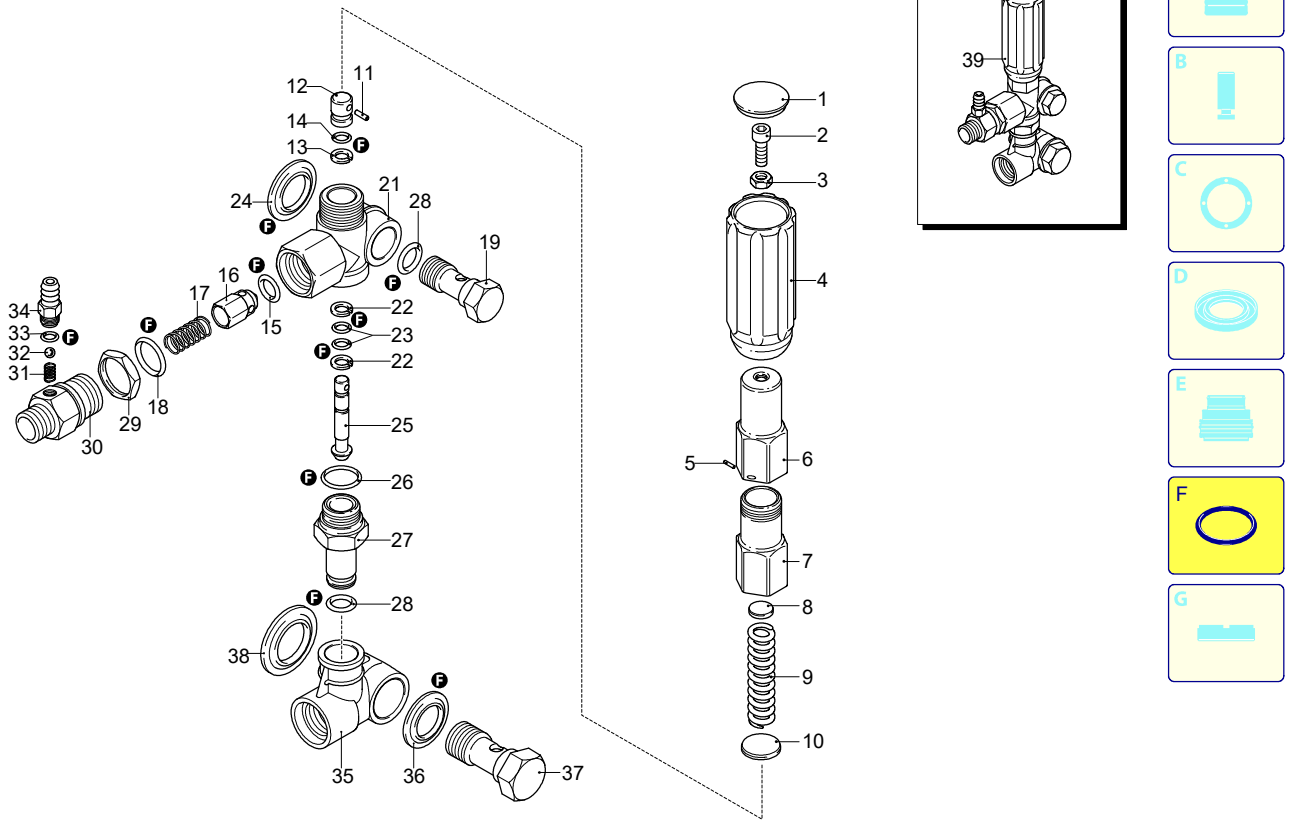

Validity	Pos.	Code	Description	Q
	1	1560580	Plug	1
	2	540290	Screw	1
	3	1660210	Nut	1
	4	1560400	Knob	1
	5	1080070	Pin	1
	6	1560420	Screw	1
	7	1560410	Guide	1
	8	1560440	Wobble plate	1
	9	1560350	Spring	1
	10	1080610	Wobble plate	1
	11	1080660	Pin	1
	12	1080540	Piston	1
	13	391000	O-ring	1
	14	1080640	Ring	1
	15	1560150	O-ring	1
	16	1560100	Shutter	1
	17	1560140	Spring	1
	18	180101	O-ring	1
	19	1540272	Screw	1
	21	1560010	Valve body	1
	22	1080550	Ring	2
	23	480480	O-ring	2
	24	1560280	Washer	1
	25	1560320	Piston	1
	26	880270	O-ring	1
	27	1560051	Fitting	1
	28	390080	O-ring	2
	29	1560510	Nut	1
	30	1560530	Fitting	1
	31	1560520	Spring	1
	32	1250280	Ball	1
	33	480480	O-ring	1
	34	1560490	Hose tail	1
	35	1540020	Suction fitting	1
	36	1540120	Washer	1
	37	1540090	Fitting	1
	38	1560290	Washer	1
	39	20082	Complete valve	1
	F	2611	Gasket kit	1

UN_CE_0737-ET

ANNOVI REVERBERI
The Power of Experience

HOT 2015N

Version:
Serial number:
Code: **24401**

29/03/2018

400 V - 50 Hz - 3 ~

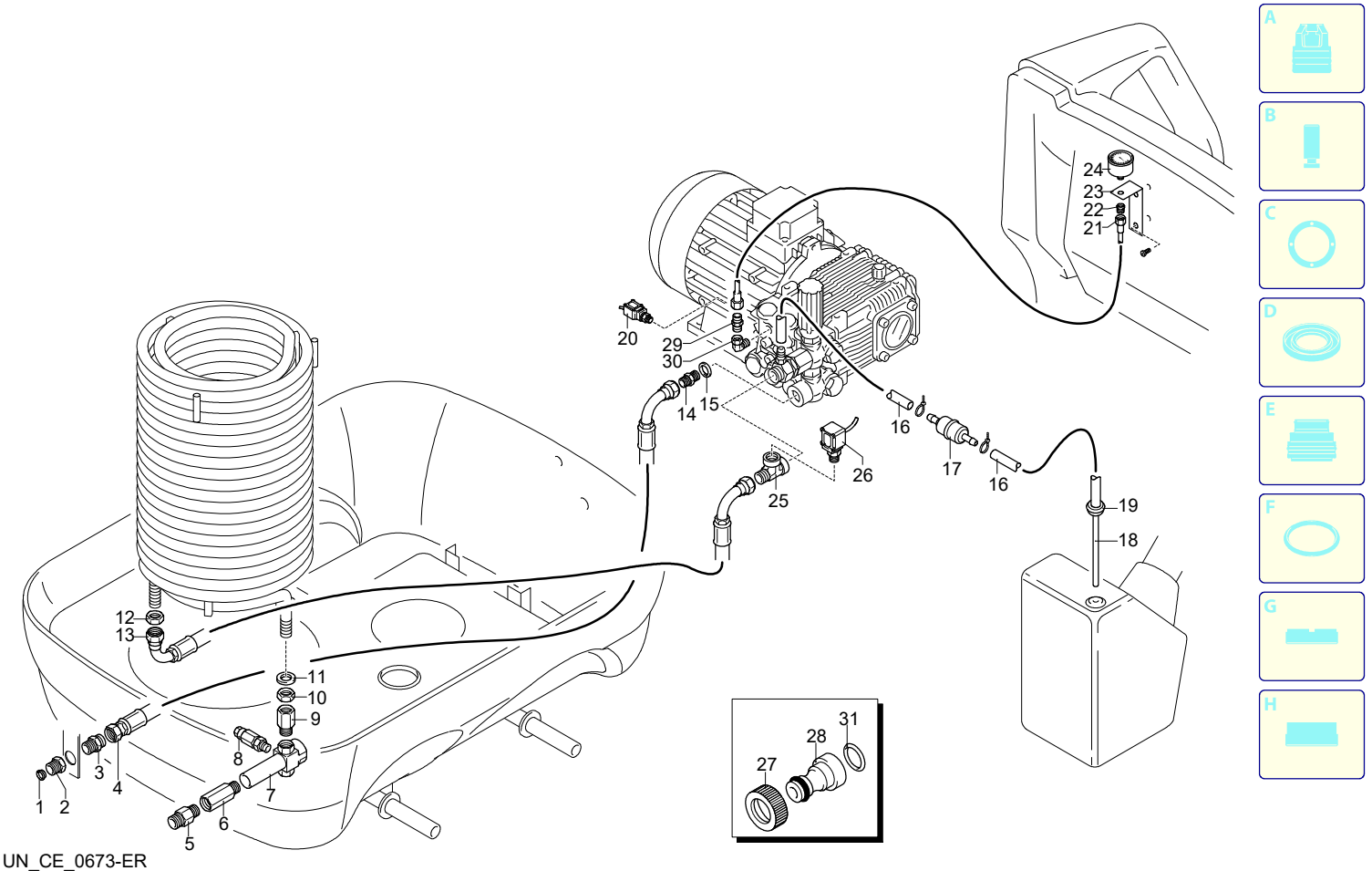

UN_CE_0673-ER

Validity	Pos.	Code	Description	Q
	1	50713	Filter	1
	2	3161130	Fitting	1
	3	3161180	Fitting	1
	4	3161300	Pipe	1
	5	3161150	Fitting	1
	6	3160470	Fitting	1
	7	3161160	Fitting	1
	8	3161400	Safety valve	1
	9	3160430	Fitting	1
	10	3161490	Nut	1
	11	3162040	Washer	1
	12	3161490	Nut	1
	13	3161340	Pipe	1
	14	3160210	Fitting	1
	15	740290	O-ring	1
	16	3161570	Pipe	1
	17	3163560	Filter	1
	18	3163810	Pipe	1
	19	3161050	Gland	1
	20	3161080	Pressure switch	1
	21	3161670	Pipe	1
	22	3163640	Fitting	1
	23	3163650	Bracket	1
	24	3161040	Pressure gauge	1
	25	3160510	Fitting	1
	26	3161090	Pressure switch	1
	27	3161010	Ring nut	1
	28	3161140	Fitting	1
	29	3162610	Fitting	1
	30	3164350	Fitting	1
	31	3162300	Gasket	1

ANNOVI REVERBERI
The Power of Experience

HOT 2015N

Version:
Serial number:
Code: **24401**

29/03/2018

400 V - 50 Hz - 3 ~

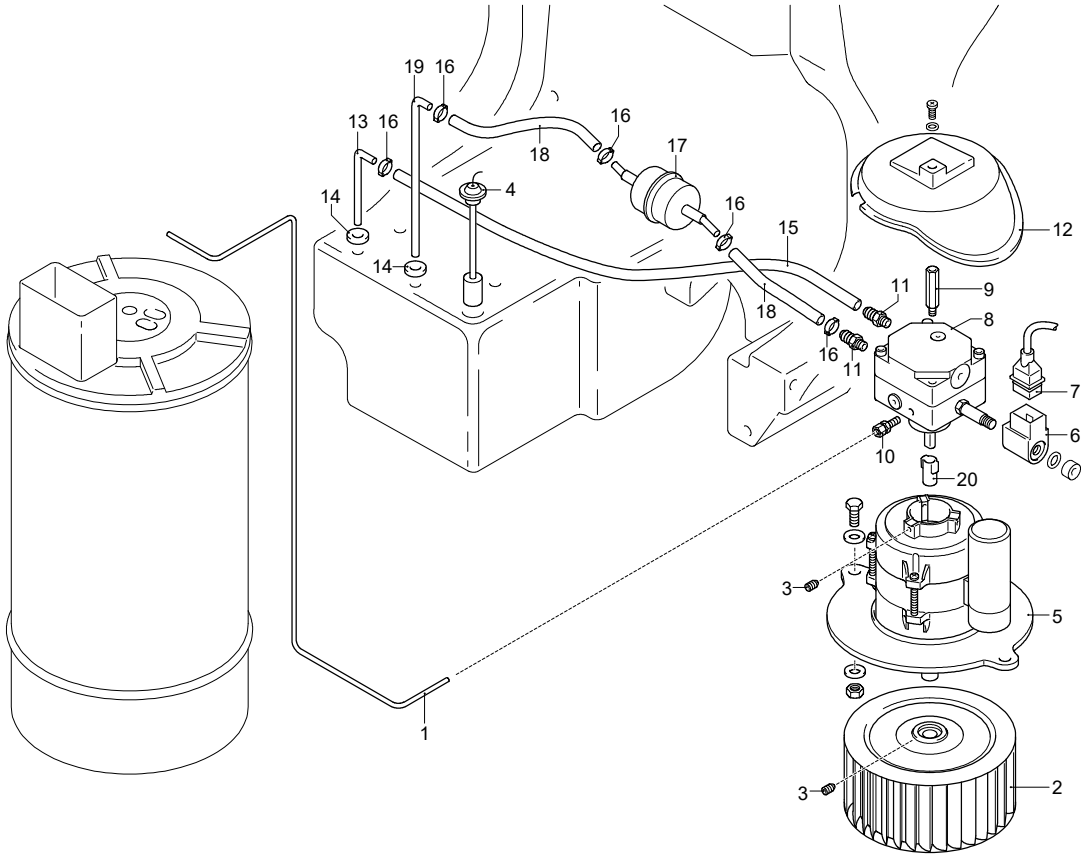

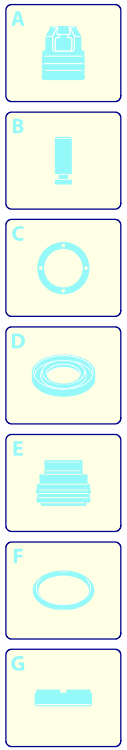

Validity	Pos.	Code	Description	Q
	1	3161650	Pipe	1
	2	3161820	Fan	1
	3	3163540	Screw	2
	4	3162580	Float	1
	5	3163490	Motor	1
	6	3160320	Solenoid	1
	7	3161440	Cable	1
	8	3160310	Pump	1
	9	3163770	Stud bolt	1
	10	3160330	Fitting	1
	11	3160340	Hose tail	2
	12	3162000	Guard	1
	13	3161660	Pipe	1
	14	3161050	Gland	2
	15	3161580	Pipe	1
	16	3162060	Clamp	5
	17	3161510	Filter	1
	18	3161600	Pipe	1
	19	3163780	Pipe	1
	20	3160300	Coupling	1

ANNOVI REVERBERI
The Power of Experience

HOT 2015N

Version:
Serial number:
Code: **24401**

29/03/2018

400 V - 50 Hz - 3 ~

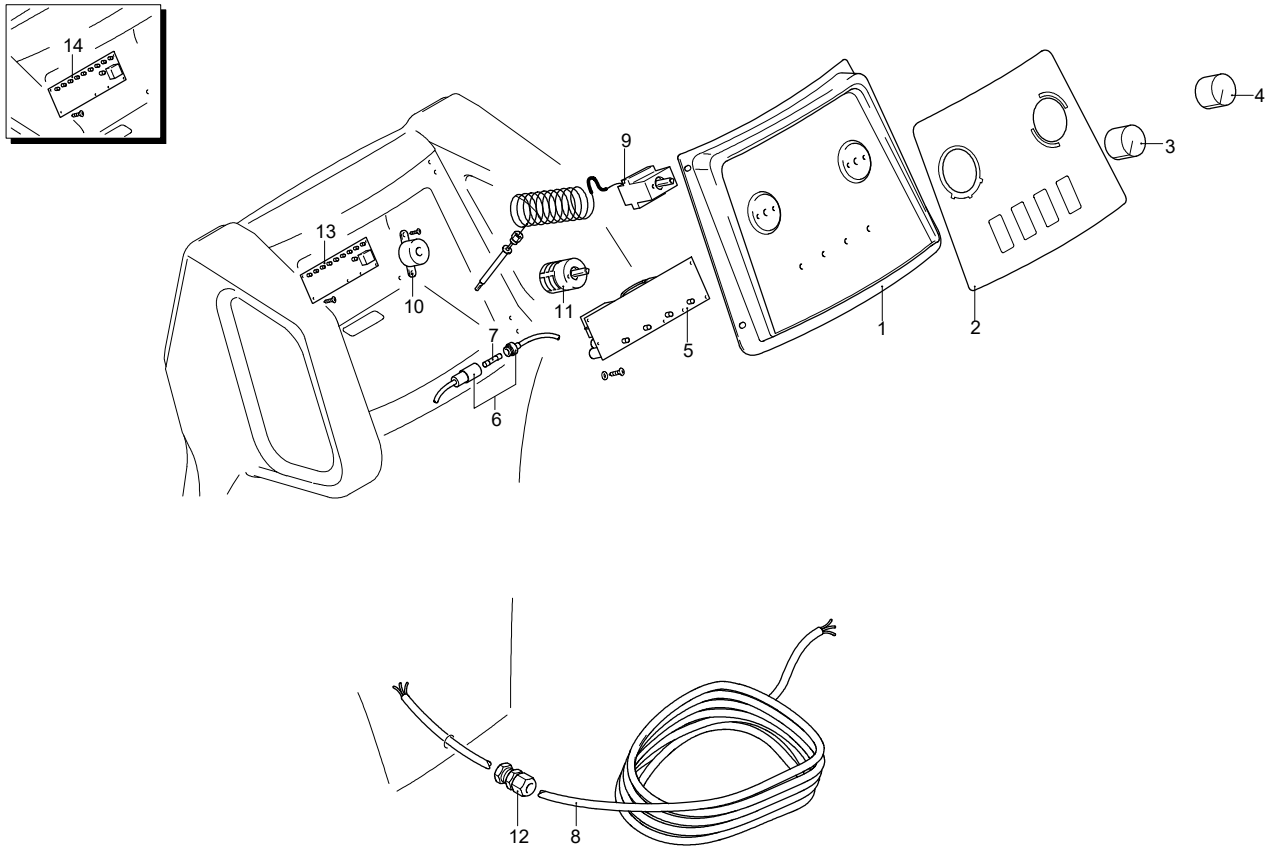

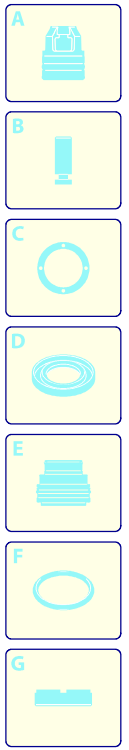

Validity	Pos.	Code	Description	Q
	1	3160950	Support	1
	2	3162070	Plate	1
	3	3161970	Knob	1
	4	3161980	Knob	1
	5	3160880	Board	1
	6	3163720	Fuse holder	1
	7	3160920	Fuse	1
	8	3160810	Cable	1
	9	3161800	Thermostat	1
	10	3163450	Horn	1
	11	3160840	Switch	1
	12	3160870	Gland	1
I---» 03-11	13	3164150	Board - ALB 531	1
---»I 02-11	14	3160890	Board - ALB 014	1

UN_CE_0642-DU

ANNOVI REVERBERI
The Power of Experience

HOT 2015N

Version:
Serial number:
Code: **24401**

29/03/2018

400 V - 50 Hz - 3 ~

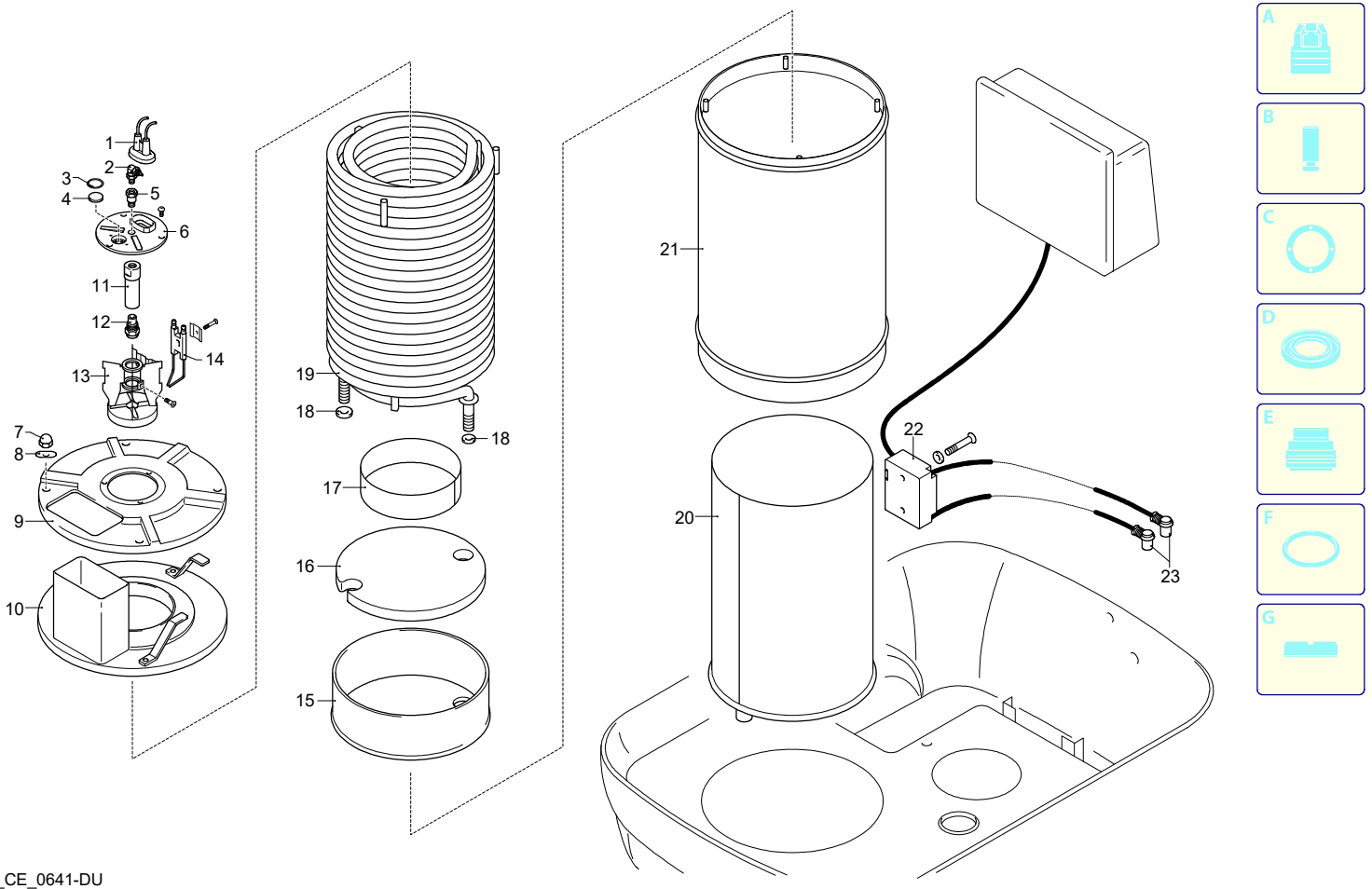

UN_CE_0641-DU

Validity	Pos.	Code	Description	Q
	1	3162370	Guard	1
	2	3161100	Fitting	1
	3	3162030	Ring	1
	4	3161860	Glass	1
	5	3161230	Fitting	1
	6	3161840	Plate	1
	7	3163960	Nut	4
	8	3163940	Washer	4
	9	3161790	Cover	1
	10	3161780	Cover	1
	11	3161870	Nozzle holder	1
	12	3162830	Nozzle	1
	13	3161560	Support	1
	14	3161890	Electrode	1
	15	3161770	Cover	1
	16	3161830	Plate	1
	17	3161430	Ring	1
	18	3162040	Washer	2
	19	3161760	Pipe coil	1
	20	3161480	Boiler	1
	21	3161470	Boiler	1
	22	50717	Danfoss/Fida transformer	1
	23	3160820	Cable	2

ANNOVI REVERBERI
The Power of Experience

HOT 2015N

Version:
Serial number:
Code: **24401**

29/03/2018

400 V - 50 Hz - 3 ~

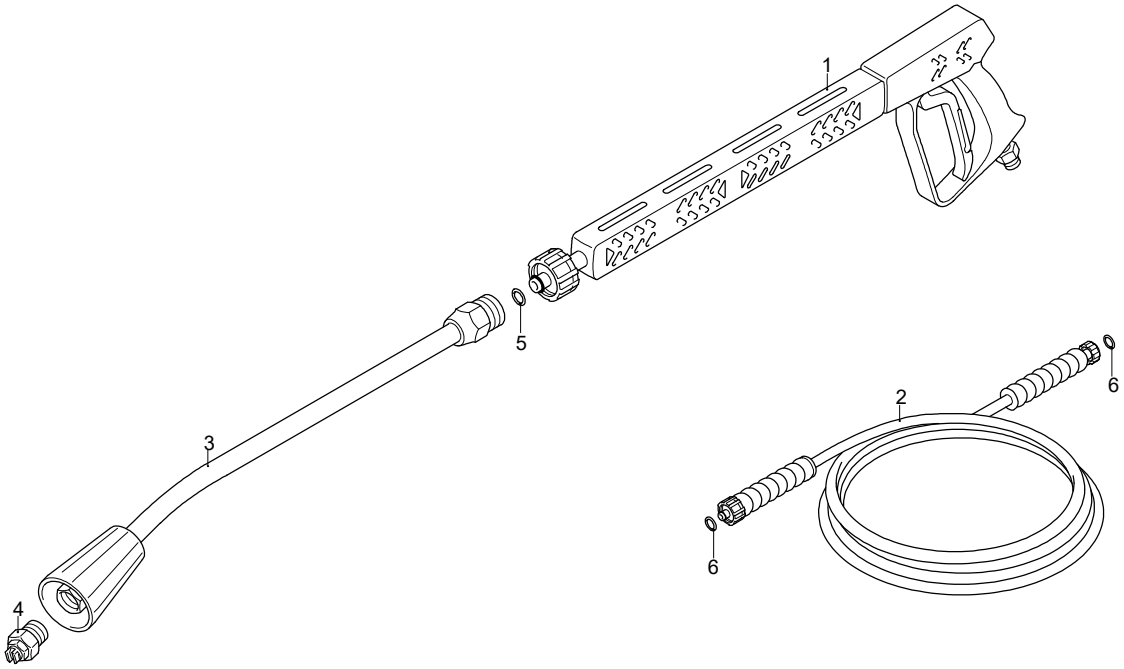

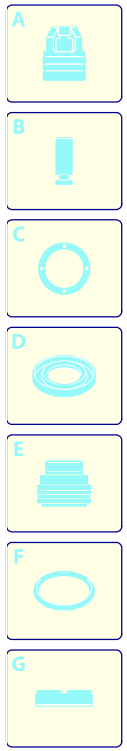

Validity	Pos.	Code	Description	Q
	1	41847	Gun	1
	2	3160160	High pressure hose	1
	3	40826	Lance	1
	4	3086	Nozzle	1
	5	391000	O-ring	1
	6	2000570	O-ring	2

UN_CE_0482-CP