ANNOVI REVERBERI
The Power of Experience

# HOT 1713

Version:
Serial number:
Code: **24399**

**29/03/2018**

**400 V - 50 Hz - 3 ~**

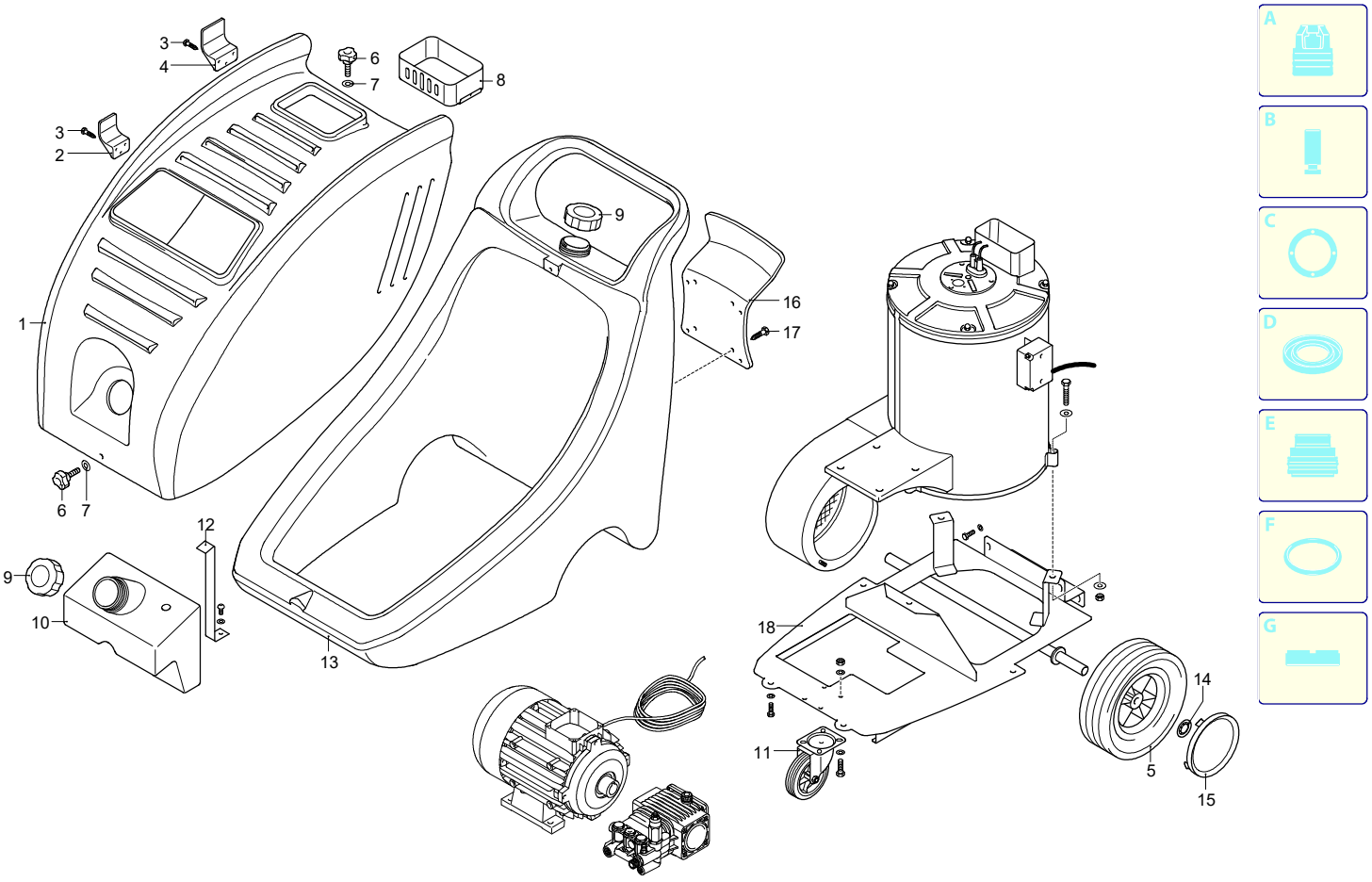


| Validity | Pos. | Code | Description | Q |
|---|---|---|---|---|
| | 1 | 3160720 | Yellow casing | 1 |
| | 2 | 3160100 | Accessories carrier | 1 |
| | 3 | 2100300 | Screw | 6 |
| | 4 | 3160110 | Accessories carrier | 1 |
| | 5 | 3164380 | Wheel | 2 |
| | 6 | 3163890 | Knob | 2 |
| | 7 | 3163290 | Washer | 2 |
| | 8 | 3163880 | Guard | 1 |
| | 9 | 3161920 | Plug | 2 |
| | 10 | 3163900 | Tank | 1 |
| | 11 | 3160760 | Wheel | 1 |
| | 12 | 3163910 | Bracket | 1 |
| | 13 | 3161550 | Tank | 1 |
| | 14 | 3162010 | Ring | 2 |
| | 15 | 3161940 | Guard | 2 |
| | 16 | 3160090 | Accessories carrier | 1 |
| | 17 | 2360360 | Screw | 4 |
| | 18 | 3160710 | Frame | 1 |

UN_CE_0488-DU

ANNOVI REVERBERI
The Power of Experience

# HOT 1713

Version:
Serial number:
Code: **24399**

**29/03/2018**

**400 V - 50 Hz - 3 ~**

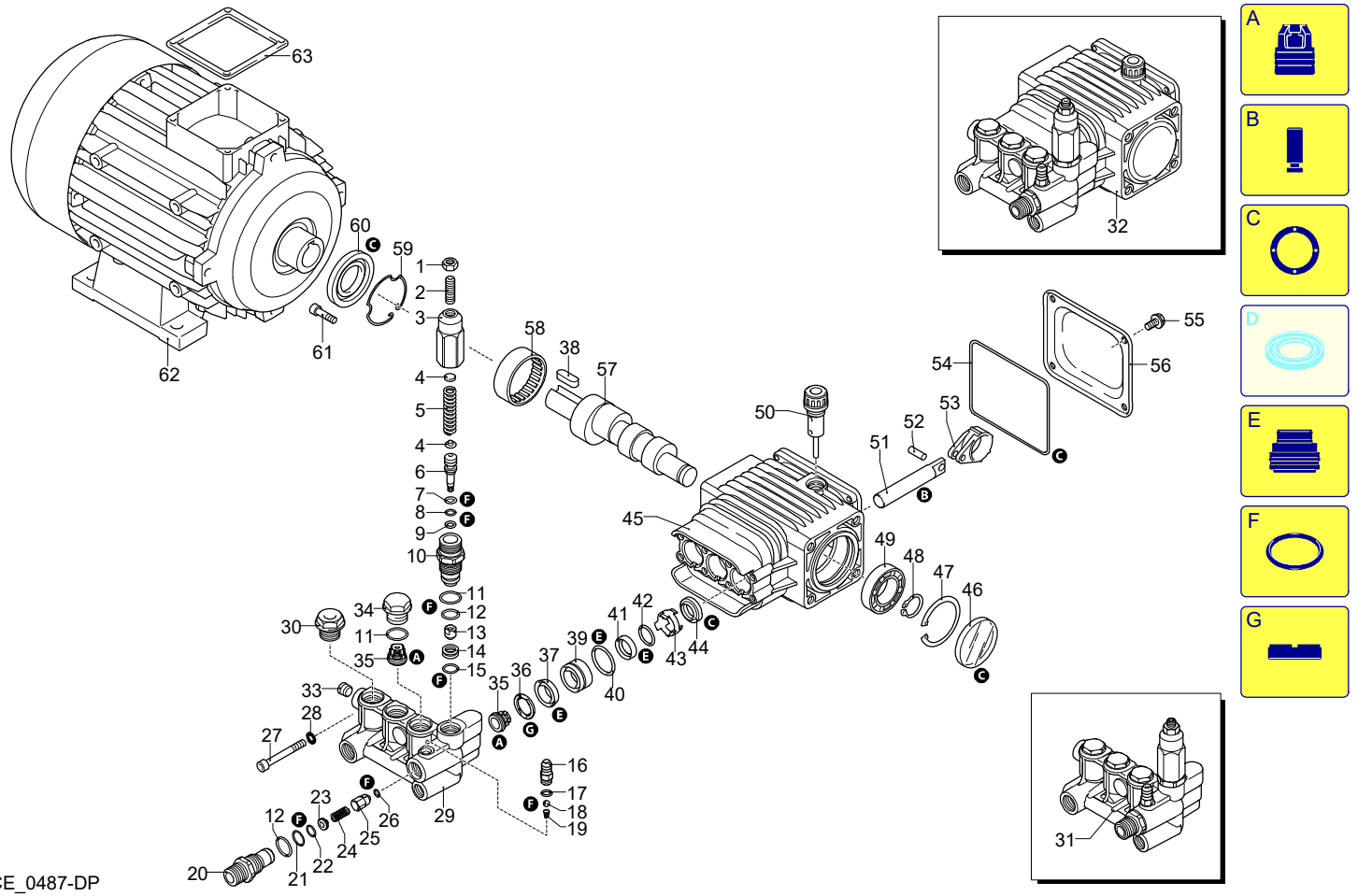


A
B
C
D
E
F
G

UN_CE_0487-DP

| Validity | Pos. | Code | Description | Q |
|---|---|---|---|---|
| | 1 | 1980300 | Nut | 1 |
| | 2 | 392840 | Screw | 1 |
| | 3 | 2760480 | Insert | 1 |
| | 4 | 1980220 | Wobble plate | 2 |
| | 5 | 2760410 | Spring | 1 |
| | 6 | 2760400 | Piston | 1 |
| | 7 | 2260100 | O-ring | 1 |
| | 8 | 660190 | O-ring | 1 |
| | 9 | 2760210 | Ring | 1 |
| | 10 | 2760050 | Piston guide | 1 |
| | 11 | 1200690 | O-ring | 4 |
| | 12 | 394280 | O-ring | 2 |
| | 13 | 2260070 | Shutter | 1 |
| | 14 | 2760090 | Seat | 1 |
| | 15 | 770140 | O-ring | 1 |
| | 16 | 1982520 | Hose tail | 1 |
| | 17 | 480480 | O-ring | 1 |
| | 18 | 1250280 | Ball | 1 |
| | 19 | 1560520 | Spring | 1 |
| | 20 | 2760230 | Fitting | 1 |
| | 21 | 2760270 | O-ring | 1 |
| | 22 | 1470210 | O-ring | 1 |
| | 23 | 2760120 | Injector | 1 |
| | 24 | 2760200 | Spring | 1 |
| | 25 | 2760130 | Shutter | 1 |
| | 26 | 1460430 | O-ring | 1 |
| | 27 | 801080 | Screw | 8 |
| | 28 | 1381550 | Washer | 8 |
| | 29 | 2760510 | Head | 1 |
| | 30 | 2760590 | Plug | 2 |
| | 31 | 2769228 | Head assembly | 1 |
| | 32 | 23860 | Pump assembly | 1 |
| | 33 | 2760260 | Plug | 2 |
| | 34 | 2760180 | Plug | 3 |
| | 35 | 2769050 | Complete valve | 6 |
| | 36 | 1780140 | Ring | 3 |
| | 37 | 1260220 | Water seal | 3 |
| | 38 | 650250 | Key | 3 |
| | 39 | 1320351 | Piston guide | 3 |
| | 40 | 1260420 | O-ring | 3 |
| | 41 | 1260450 | Water seal | 3 |
| | 42 | 480440 | O-ring | 3 |
| | 43 | 2760600 | Spacer | 3 |
| | 44 | 2460170 | Oil seal | 3 |
| | 45 | 2760460 | Pump body | 1 |
| | 46 | 1266740 | Oil seal | 1 |
| | 47 | 1260790 | Ring | 1 |
| | 48 | 1780550 | Ring | 1 |
| | 49 | 1780490 | Bearing | 1 |
| | 50 | 880130 | Plug | 1 |
| | 51 | 2760450 | Piston | 3 |
| | 52 | 1780050 | Pin | 3 |
| | 53 | 1780040 | Connecting-rod | 3 |
| | 54 | 2760280 | O-ring | 1 |
| | 55 | 802190 | Screw | 4 |
| | 56 | 2760110 | Cover | 1 |
| | 57 | 2760540 | Shaft | 1 |
| | 58 | 1321190 | Bearing | 1 |
| | 59 | 1321080 | Ring | 1 |
| | 60 | 1260750 | Ring | 1 |
| | 61 | 1200430 | Screw | 4 |
| | 62 | 44273 | Motor | 1 |

ANNOVI REVERBERI
The Power of Experience

# HOT 1713

Version:
Serial number:
Code: **24399**

**29/03/2018**

**400 V - 50 Hz - 3 ~**

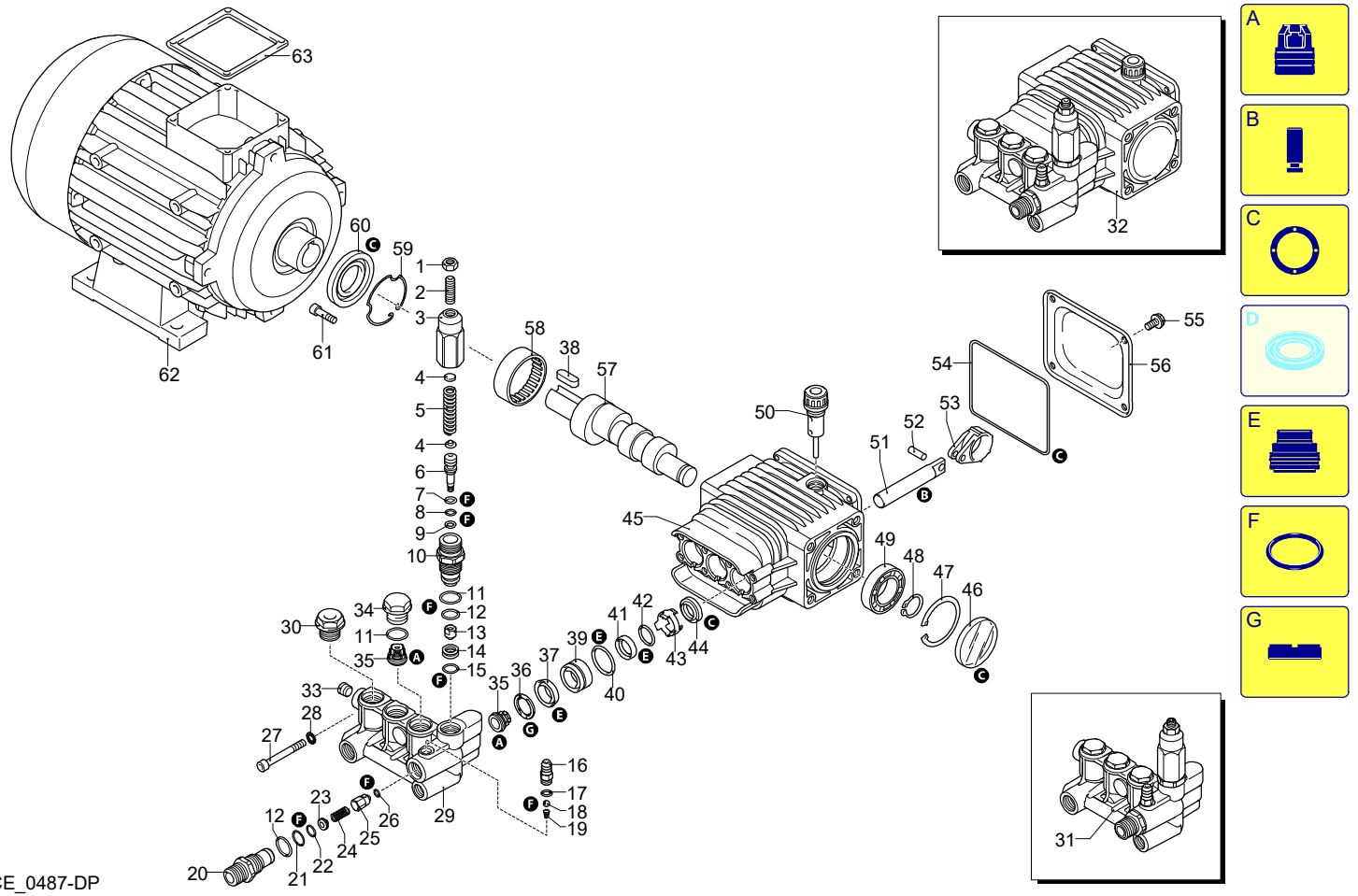


UN_CE_0487-DP

| Validity | Pos. | Code | Description | Q |
|---|---|---|---|---|
| | 63 | 50068 | Gasket | 1 |
| | A | 2186 | Valve kit | 1 |
| | B | 42154 | Piston kit | 1 |
| | C | 42194 | Oil seal kit | 1 |
| | E | 42155 | Water seal kit | 1 |
| | F | 2190 | Gasket kit | 1 |
| | G | 2745 | Support ring kit | 1 |

ANNOVI REVERBERI
The Power of Experience

# HOT 1713

Version:
Serial number:
Code: **24399**

**29/03/2018**

**400 V - 50 Hz - 3 ~**

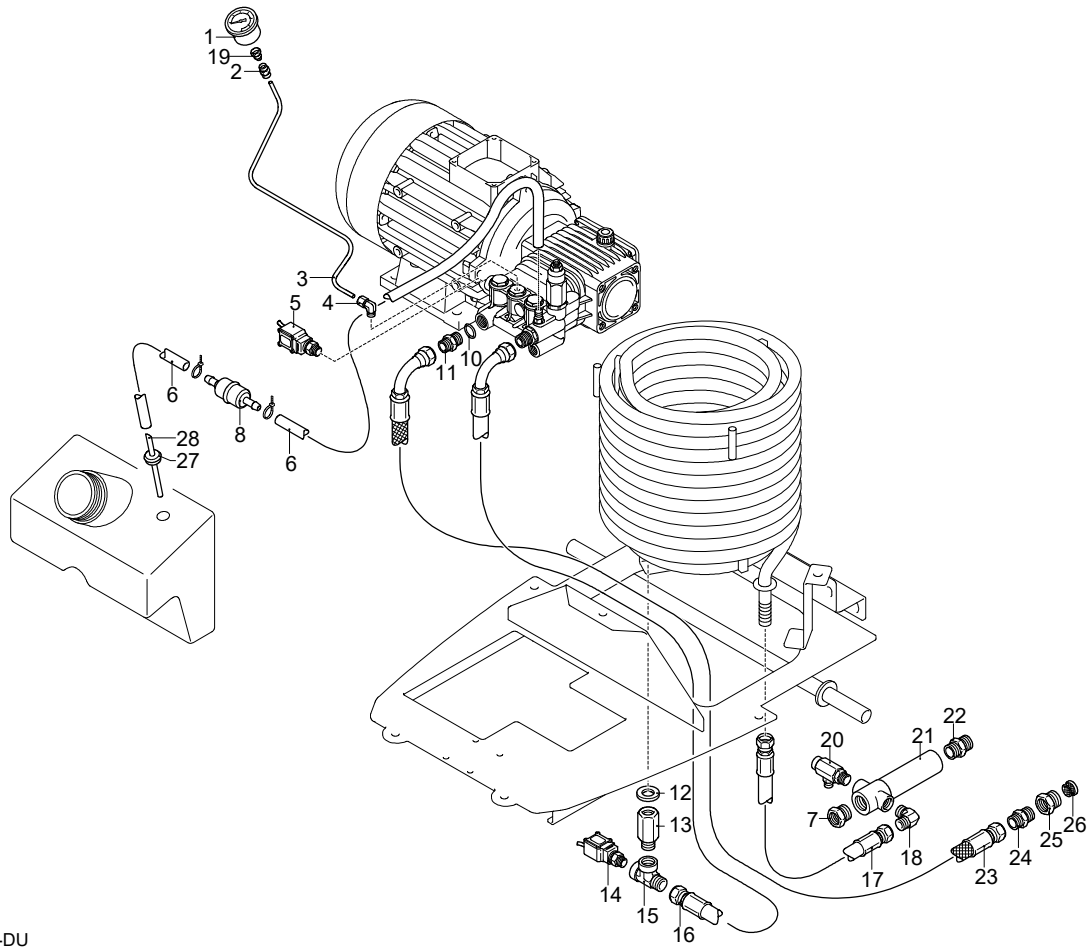


A B C D E F G

| Validity | Pos. | Code | Description | Q |
|---|---|---|---|---|
| | 1 | 3161040 | Pressure gauge | 1 |
| | 2 | 3164070 | Fitting | 1 |
| | 3 | 3163510 | Pipe | 1 |
| | 4 | 3161110 | Fitting | 1 |
| | 5 | 3162890 | Pressure switch | 1 |
| | 6 | 3163850 | Detergent hose | 1 |
| | 7 | 3161210 | Fitting | 1 |
| | 8 | 3163560 | Filter | 1 |
| | 9 | 1461470 | Fitting | 1 |
| | 10 | 740290 | O-ring | 1 |
| | 11 | 3160210 | Fitting | 1 |
| | 12 | 3162040 | Washer | 1 |
| | 13 | 3160430 | Fitting | 1 |
| | 14 | 3161080 | Pressure switch | 1 |
| | 15 | 3160510 | Fitting | 1 |
| | 16 | 3164400 | Pipe | 1 |
| | 17 | 3161310 | Pipe | 1 |
| | 18 | 3161190 | Fitting | 1 |
| | 19 | 3161260 | Fitting | 1 |
| | 20 | 3161400 | Safety valve | 1 |
| | 21 | 3161170 | Fitting | 1 |
| | 22 | 3161150 | Fitting | 1 |
| | 23 | 3161290 | Pipe | 1 |
| | 24 | 3161180 | Fitting | 1 |
| | 25 | 3160480 | Fitting | 1 |
| | 26 | 50713 | Filter | 1 |
| | 27 | 3161050 | Gland | 1 |
| | 28 | 3163840 | Pipe | 1 |

UN_CE_0489-DU

ANNOVI REVERBERI
The Power of Experience

# HOT 1713

Version:
Serial number:
Code: **24399**

**29/03/2018**

**400 V - 50 Hz - 3 ~**

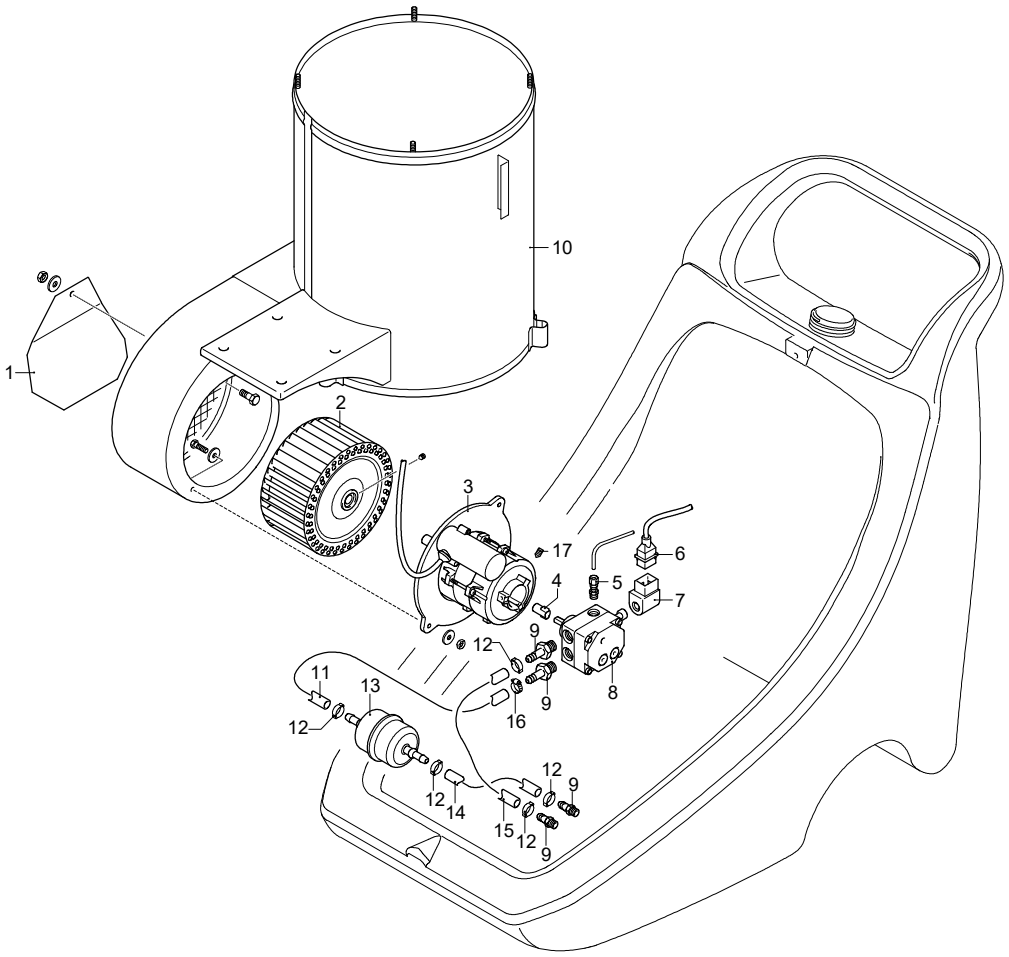


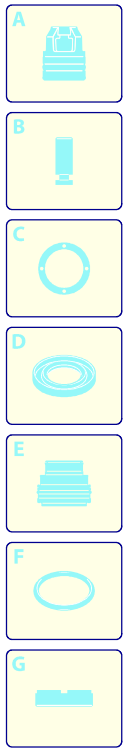


| Validity | Pos. | Code | Description | Q |
|---|---|---|---|---|
| | 1 | 3161900 | Plate | 1 |
| | 2 | 3161810 | Fan | 1 |
| | 3 | 3161530 | Motor | 1 |
| | 4 | 3160300 | Coupling | 1 |
| | 5 | 3160330 | Fitting | 1 |
| | 6 | 3161440 | Cable | 1 |
| | 7 | 3160320 | Solenoid | 1 |
| | 8 | 3162910 | Pump | 1 |
| | 9 | 3160340 | Hose tail | 4 |
| | 10 | 3161460 | Boiler | 1 |
| | 11 | 3161620 | Pipe | 5 |
| | 12 | 3162060 | Clamp | 5 |
| | 13 | 3161520 | Filter | 1 |
| | 14 | 3161610 | Pipe | 1 |
| | 15 | 3161580 | Pipe | 1 |
| | 16 | 3163920 | Clamp | 1 |
| | 17 | 3163540 | Screw | 1 |

UN_CE_0481-FW

ANNOVI REVERBERI
The Power of Experience

# HOT 1713

Version:
Serial number:
Code: **24399**

**29/03/2018**

**400 V - 50 Hz - 3 ~**

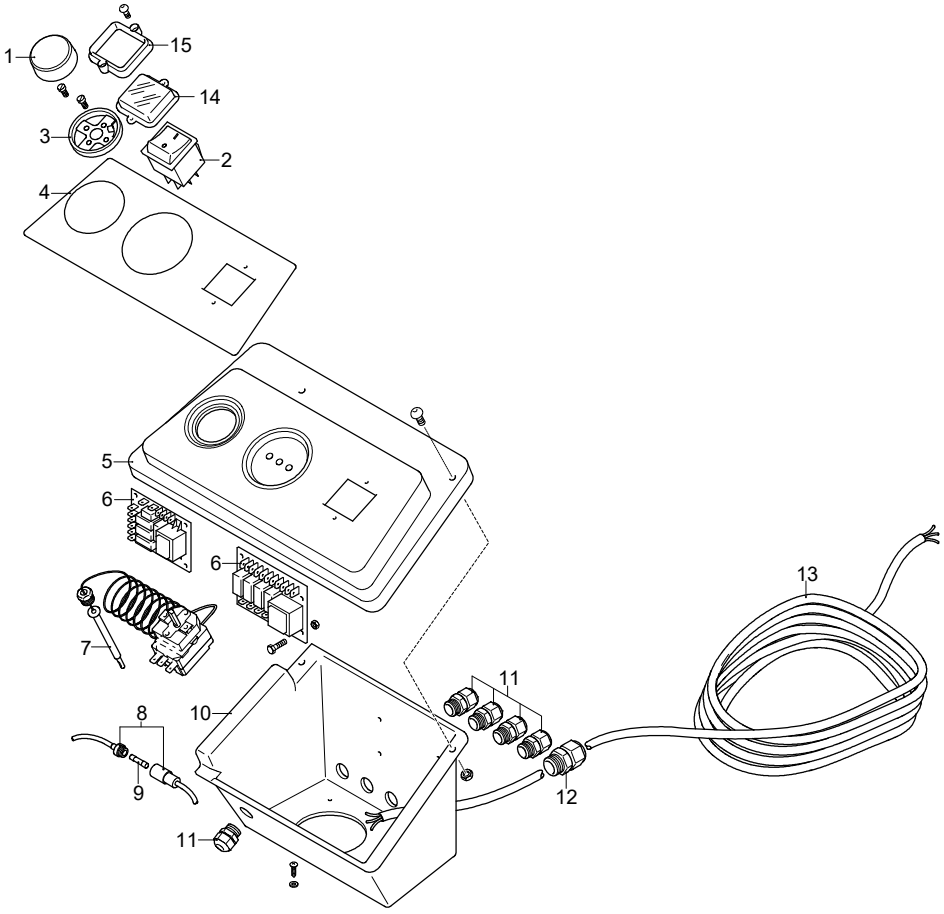


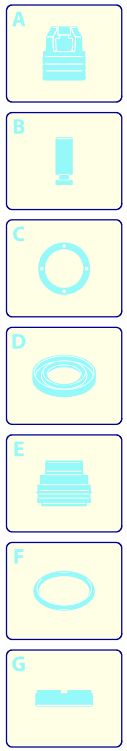


| Validity | Pos. | Code | Description | Q |
|---|---|---|---|---|
| | 1 | 3161960 | Knob | 1 |
| | 2 | 3162810 | Switch | 1 |
| | 3 | 3161990 | Support | 1 |
| | 4 | 3163120 | Plate | 1 |
| | 5 | 3160940 | Support | 1 |
| | 6 | 3160900 | Board - ALB 012 | 1 |
| | 6 | 3163660 | Board - TSP 16 | 1 |
| | 7 | 50720 | Thermostat | 1 |
| | 8 | 3163720 | Fuse holder | 1 |
| | 9 | 3160920 | Fuse | 1 |
| | 10 | 3160930 | Box | 1 |
| | 11 | 3160860 | Gland | 5 |
| | 12 | 3160870 | Gland | 1 |
| | 13 | 3160810 | Cable | 1 |
| | 14 | 3162860 | Guard | 1 |
| | 15 | 3162870 | Guard | 1 |

UN_CE_0490-FW

ANNOVI REVERBERI
The Power of Experience

# HOT 1713

Version:
Serial number:
Code: **24399**

**29/03/2018**

**400 V - 50 Hz - 3 ~**

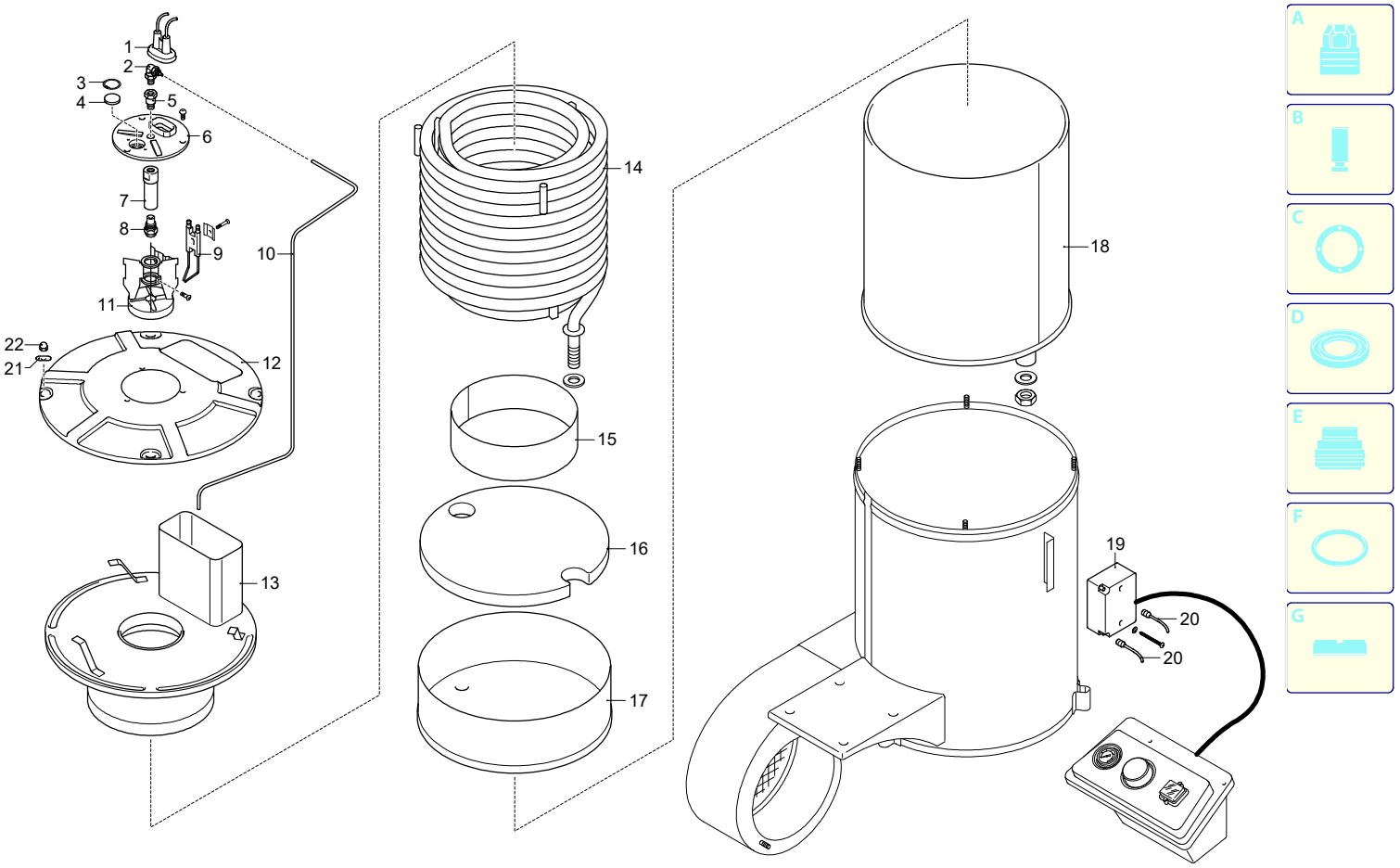


UN_CE_0491-DU

| Validity | Pos. | Code | Description | Q |
|---|---|---|---|---|
| | 1 | 3162370 | Guard | 1 |
| | 2 | 3161100 | Fitting | 1 |
| | 3 | 3162030 | Ring | 1 |
| | 4 | 3161860 | Glass | 1 |
| | 5 | 3161230 | Fitting | 1 |
| | 6 | 3161840 | Plate | 1 |
| | 7 | 3161870 | Nozzle holder | 1 |
| | 8 | 3162830 | Nozzle | 1 |
| | 9 | 3161890 | Electrode | 1 |
| | 10 | 3161680 | Pipe | 1 |
| | 11 | 3161560 | Support | 1 |
| | 12 | 3161790 | Cover | 1 |
| | 13 | 3161780 | Cover | 1 |
| | 14 | 3161750 | Pipe coil | 1 |
| | 15 | 3161430 | Ring | 1 |
| | 16 | 3161830 | Plate | 1 |
| | 17 | 3161770 | Cover | 1 |
| | 18 | 3161450 | Boiler | 1 |
| | 19 | 50717 | Danfoss/Fida transformer | 1 |
| | 20 | 3160830 | Danfoss/Fida cable | 2 |
| | 21 | 3163940 | Washer | 4 |
| | 22 | 3163960 | Nut | 4 |

ANNOVI REVERBERI
The Power of Experience

# HOT 1713

Version:
Serial number:
Code: **24399**

29/03/2018

400 V - 50 Hz - 3 ~

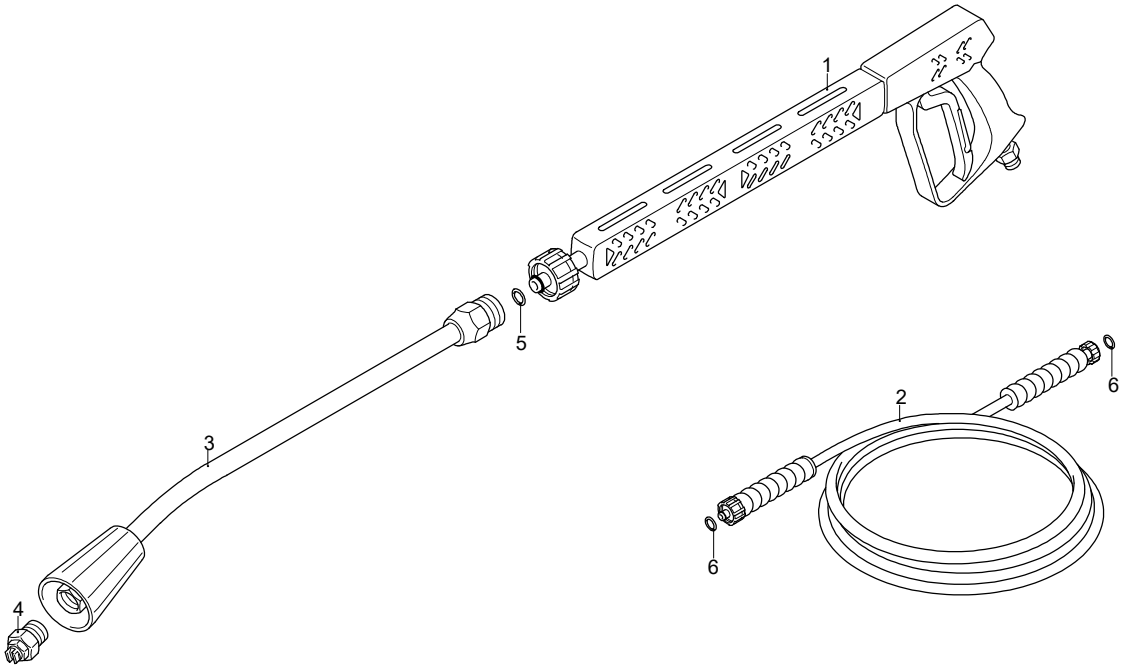


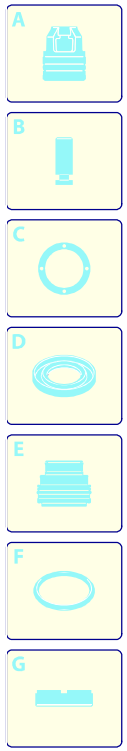


| Validity | Pos. | Code | Description | Q |
|---|---|---|---|---|
| | 1 | 41847 | Gun | 1 |
| | 2 | 3160160 | High pressure hose | 1 |
| | 3 | 40826 | Lance | 1 |
| | 4 | 3086 | Nozzle | 1 |
| | 5 | 391000 | O-ring | 1 |
| | 6 | 2000570 | O-ring | 2 |

UN_CE_0482-CP