ANNOVI REVERBERI
The Power of Experience

HOT 1509

Version:
Serial number:
Code: **26413**

29/03/2018

230 V - 50 Hz | **schuko**

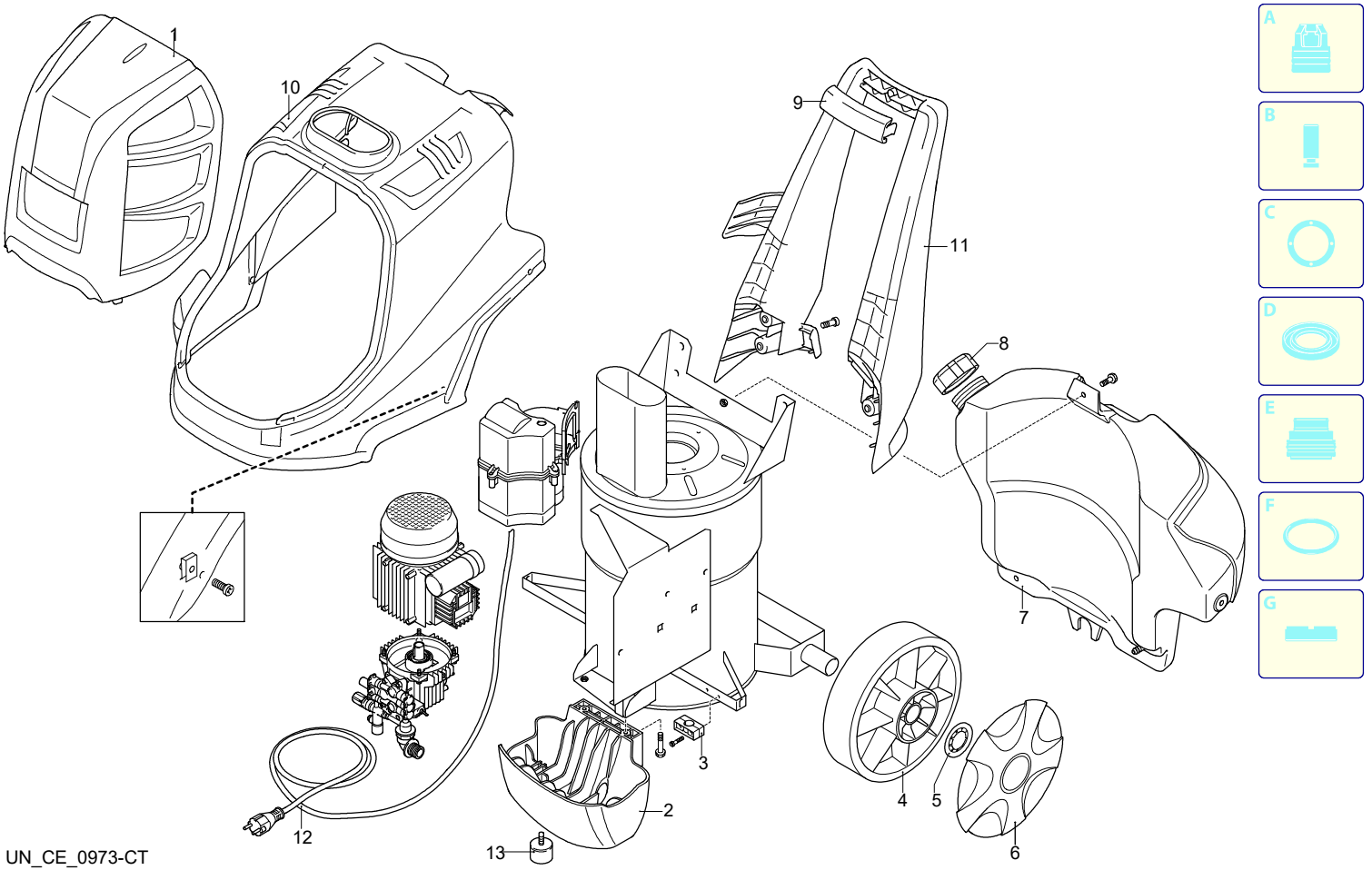

UN_CE_0973-CT

Validity	Pos.	Code	Description	Q
	1	3520093	Casing	1
	2	3523550	Foot	1
	3	3520260	Gland	1
	4	3520230	Wheel	2
	5	3520240	Washer	2
	6	3520254	Guard	2
	7	3520170	Tank	1
	8	3520180	Plug	1
	9	3520072	Knob	1
	10	3520082	Casing	1
	11	3520060	Handle	1
	12	3520870	Cable	1
	13	3523560	Vibration damper	1

ANNOVI REVERBERI
The Power of Experience

HOT 1509

Version:
Serial number:
Code: **26413**

29/03/2018

230 V - 50 Hz | **schuko**

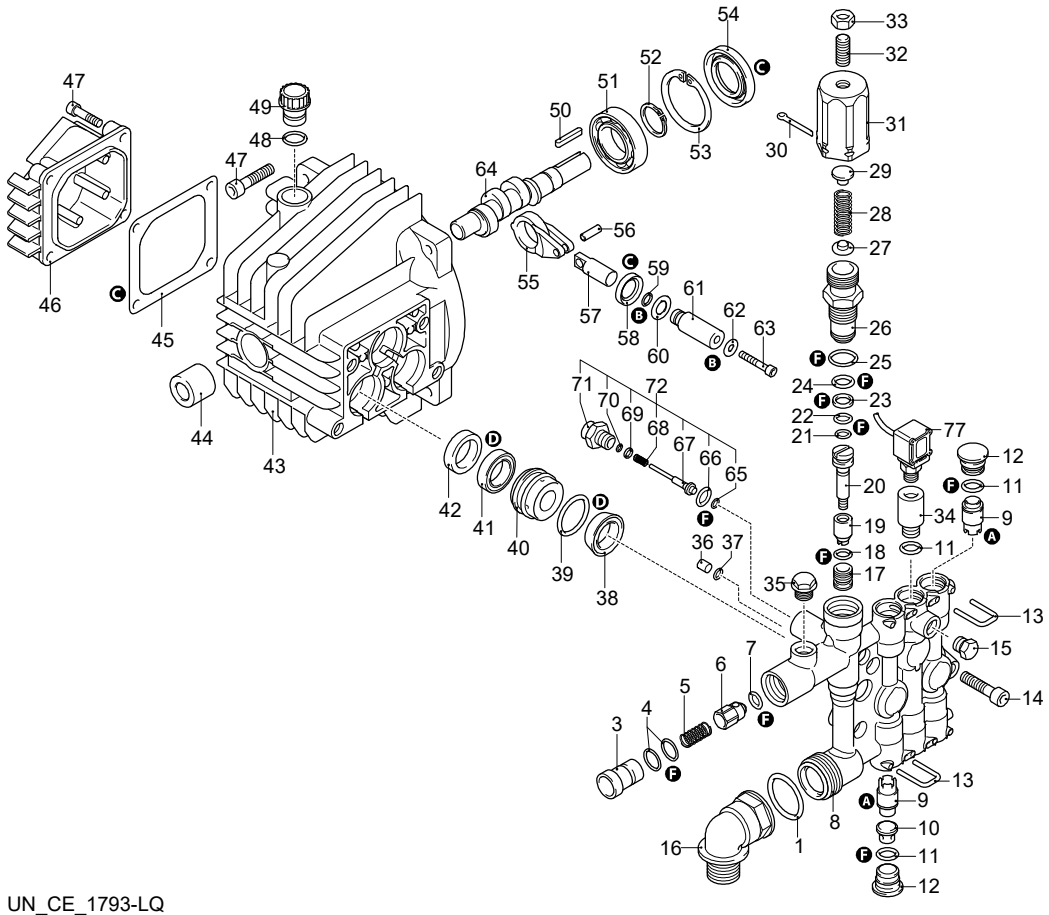

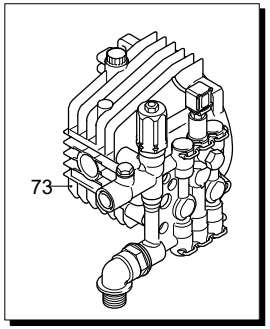

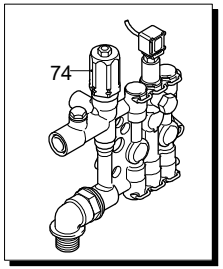

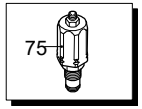

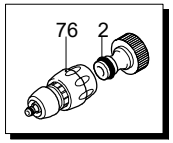

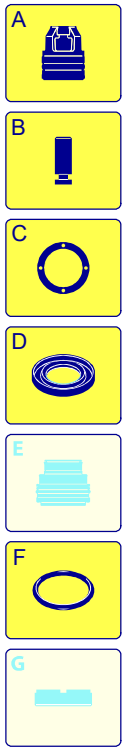

UN_CE_1793-LQ

Validity	Pos.	Code	Description	Q
	1	1344970	O-ring	1
	2	3520370	Fitting	1
	3	2901060	Injector	1
	4	800560	O-ring	2
	5	1080091	Spring	1
	6	2901070	Shutter	1
	7	1460430	O-ring	1
	8	1344850	Head	1
	9	1349055	Valve	6
	10	1344770	Spacer	3
	11	1465720	O-ring	6
	12	1344800	Plug	5
	13	1344790	Fork	6
	14	850850	Screw	4
	15	620301	Plug	1
	16	2500280	Elbow	1
	17	1342701	Seat	1
	18	600180	O-ring	1
	19	1460151	Piston	1
	20	2021900	Piston	1
	21	1080190	O-ring	1
	22	600180	O-ring	1
	23	1080401	Ring	1
	24	820510	O-ring	1
	25	740290	O-ring	1
	26	1344870	Piston guide	1
	27	1343450	Wobble plate	1
	28	1460190	Spring	1
	29	1980220	Wobble plate	1
	30	2500550	Split pin	1
	31	1344881	Insert	1
	32	1980740	Plug	1
	33	1060120	Nut	1
	34	1345020	Plug	1
	35	620301	Plug	1
	36	1344890	Plug	1
	37	2560870	O-ring	1
	38	2460180	O-ring	3
	39	770260	O-ring	3
	40	1344750	Piston guide	3
	41	1260440	Water seal	3
	42	1344760	Ring	3
	43	1344050	Pump body	1
	44	1260050	Bushing	1
	45	1040710	O-ring	1
	46	1344060	Cover	1
	47	1260780	Screw	1
	48	880840	O-ring	1
	49	1343900	Plug	1
	50	880111	Key	1
	51	1341070	Bearing	1
	52	480890	Ring	1
	53	111120	Ring	1
	54	1341080	Ring	1
	55	1340060	Connecting-rod	3
	56	1340080	Pin	3
	57	1340070	Piston	3
	58	1260460	Oil seal	3
	59	600180	O-ring	3
	60	1341010	Plate	3
	61	1342740	Piston	3
	62	1341020	Washer	3

ANNOVI REVERBERI
The Power of Experience

HOT 1509

Version:
Serial number:
Code: **26413**

29/03/2018

230 V - 50 Hz | **schuko**

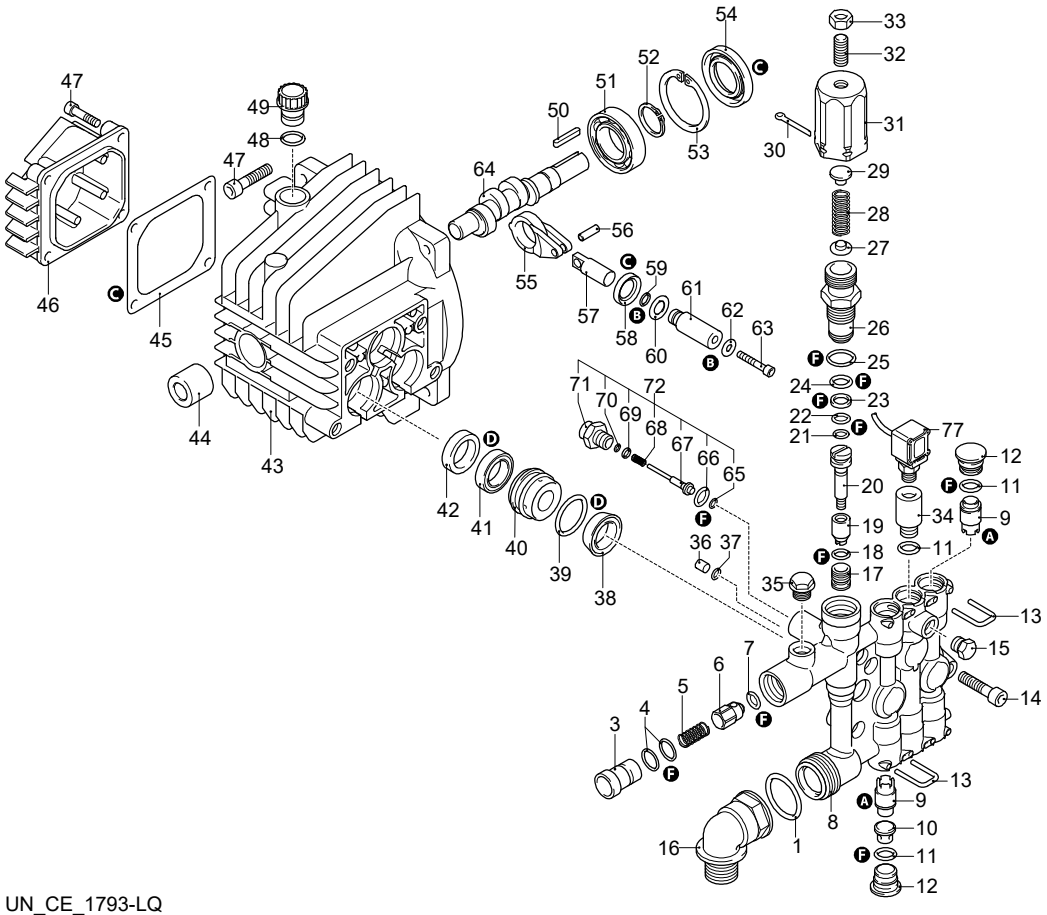

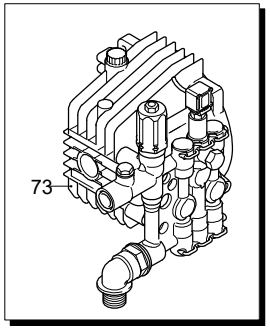

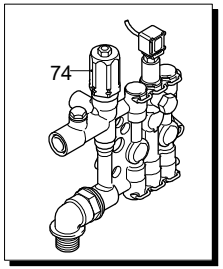

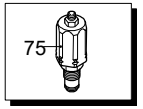

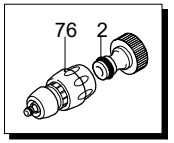

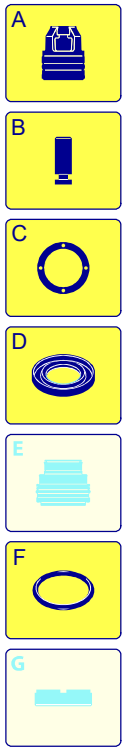

Validity	Pos.	Code	Description	Q
	63	850670	Screw	3
	64	1340170	Shaft	1
	65	1120680	O-ring	1
	66	600180	O-ring	1
	67	2022040	Pin	1
	68	2021630	Spring	1
	69	2021650	Washer	1
	70	1260820	O-ring	1
	71	1344830	Fitting	1
	72	42580	TSS Retrofit kit	1
	73	1349297	Pump assembly	1
	74	1349114	Head assembly	1
	75	42579	Valve kit adjustment	1
	76	3520360	Fitting	1
	77	3520050	Pressure switch	1
	A	42566	Valve kit	1
	B	2623	Piston kit	1
	C	1876	Oil seal kit	1
	D	42567	Water seal kit	1
	F	42568	Gasket kit	1

UN_CE_1793-LQ

ANNOVI REVERBERI
The Power of Experience

HOT 1509

Version:
Serial number:
Code: **26413**

29/03/2018

230 V - 50 Hz | **schuko**

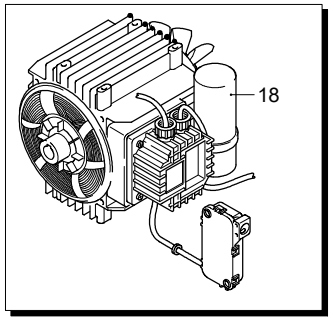

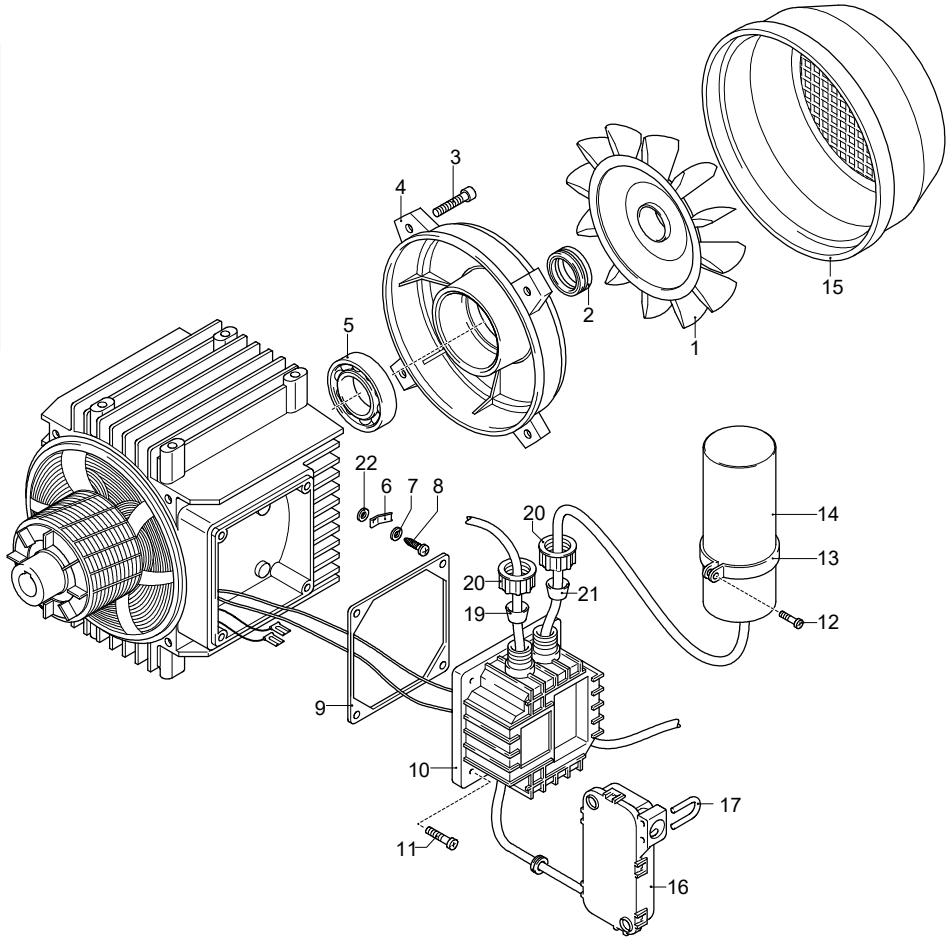

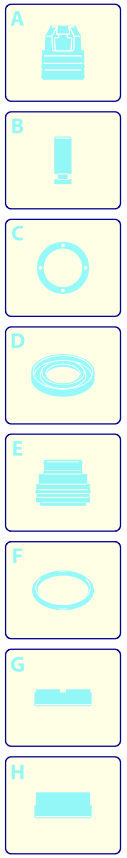

Validity	Pos.	Code	Description	Q
	1	1260300	Fan	1
	2	1340350	Seal	1
	3	1260760	Screw	1
	4	1340320	Shield	1
	5	1340340	Bearing	1
	6	3523500	Connector	1
	7	1260490	Washer	1
	8	2020570	Screw	1
	9	1340780	Gasket	1
	10	1341831	Box	1
	11	1261560	Screw	4
	12	1261560	Screw	1
	13	1340280	Clamp	1
	14	1263520	Capacitor	1
	15	1342040	Fan cowling	1
	16	2029752	TSS box assembly	1
	17	2022201	Fork	1
	18	44534	Motor	1
	19	1340660	Gland	1
	20	1340640	Ring nut	2
	21	1340650	Gland	1
	22	1262400	Washer	1

UN_CE_0976-ER

ANNOVI REVERBERI
The Power of Experience

HOT 1509

Version:
Serial number:
Code: **26413**

29/03/2018

230 V - 50 Hz | **schuko**

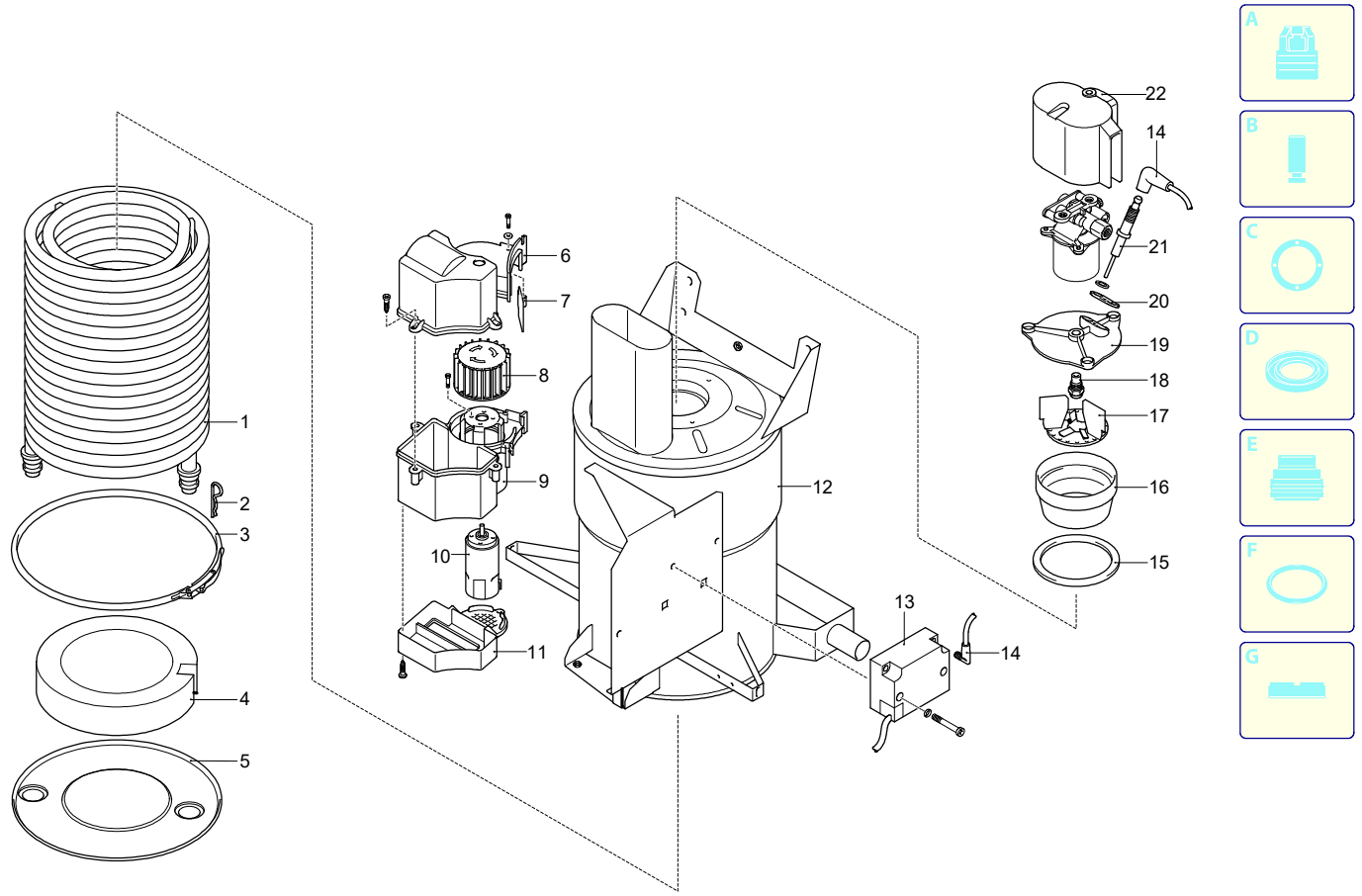

Validity	Pos.	Code	Description	Q
	1	3520630	Pipe coil	1
	2	3520620	Pin	1
	3	3520610	Clamp	1
	4	3520600	Plate	1
	5	3520590	Plate	1
	6	3520330	Cover	1
	7	3520790	Valve	1
	8	3520800	Fan	1
	9	3520320	Box	1
	10	3520810	Motor	1
	11	3520310	Cover	1
	12	3523570	Boiler	1
	13	3520860	Transformer	1
	14	3520770	Cable	2
	15	3520650	Gasket	1
	16	3520660	Element	1
	17	3520670	Support	1
	18	3520680	Nozzle	1
	19	3520690	Flange	1
	20	3520710	Plate	1
	21	3520700	Electrode	2
	22	3520820	Cover	1

UN_CE_0945-CT

ANNOVI REVERBERI
The Power of Experience

HOT 1509

Version:
Serial number:
Code: **26413**

29/03/2018

230 V - 50 Hz | **schuko**

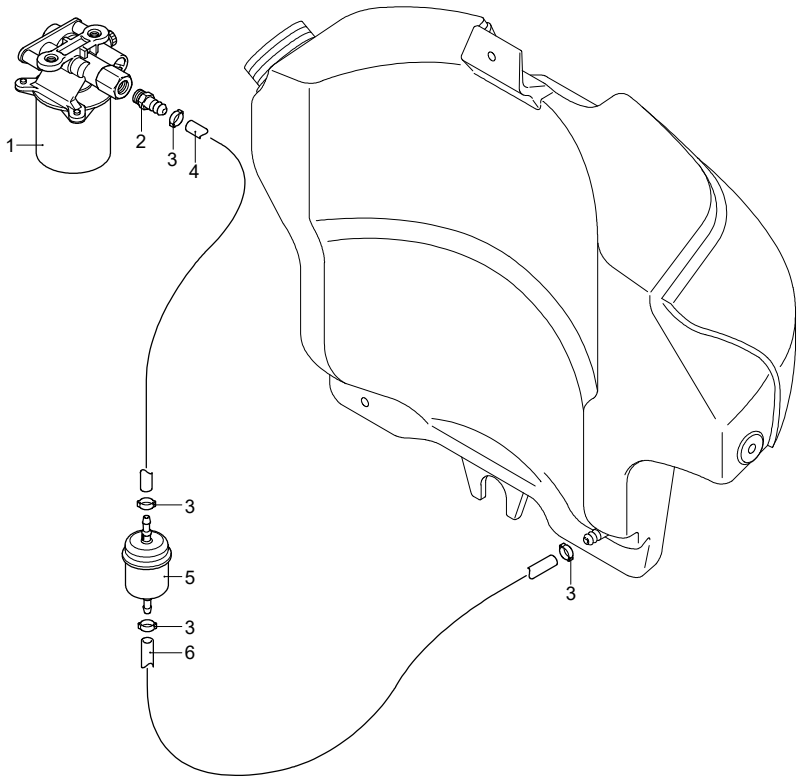

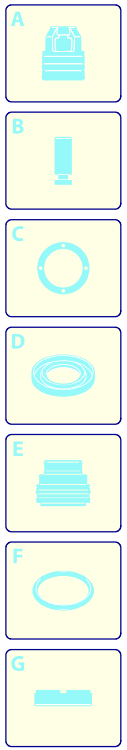

Validity	Pos.	Code	Description	Q
	1	3522760	Pump	1
	2	3520730	Hose tail	1
	3	3520740	Clamp	1
	4	3520750	Pipe	1
	5	3520760	Filter	1
	6	3520750	Pipe	1

UN_CE_0947-CT

ANNOVI REVERBERI
The Power of Experience

HOT 1509

Version:
Serial number:
Code: **26413**

29/03/2018

230 V - 50 Hz | **schuko**

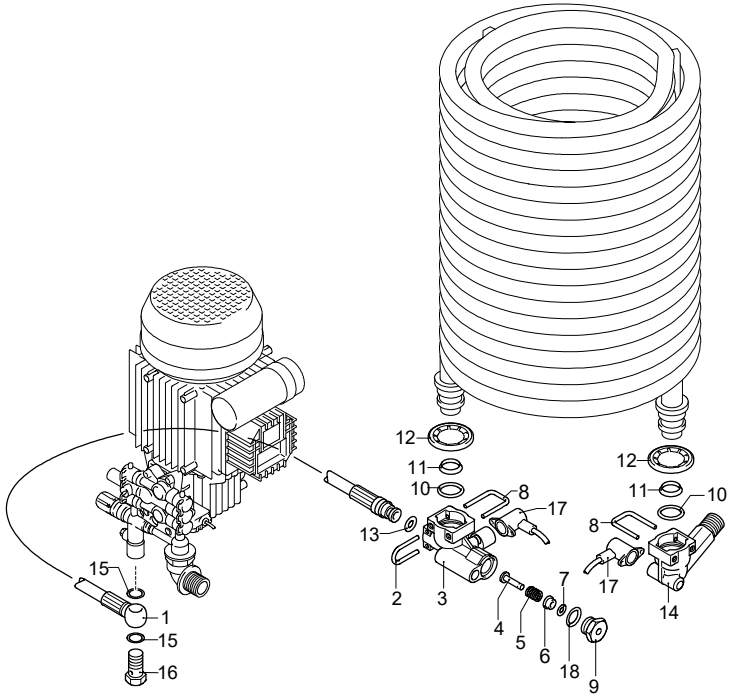

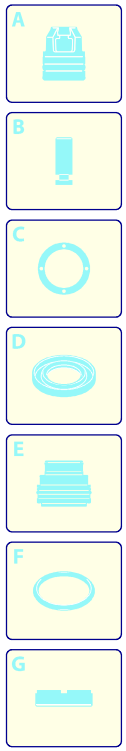

Validity	Pos.	Code	Description	Q
	1	3521470	Pipe	1
	2	3520490	Fork	1
	3	3520420	Fitting	1
	4	3520430	Piston	1
	5	3520440	Spring	1
	6	3520450	Bushing	1
	7	3520460	O-ring	1
	8	3520510	Fork	2
	9	3520480	Plug	1
	10	3520500	O-ring	2
	11	3520540	Ring	2
	12	3520240	Washer	2
	13	3520410	O-ring	1
	14	3520530	Fitting	1
	15	3520580	Washer	1
	16	3520570	Screw	1
	17	3520930	Thermostat	2
	18	3520470	O-ring	1

UN_CE_0975-ET

ANNOVI REVERBERI
The Power of Experience

HOT 1509

Version:
Serial number:
Code: **26413**

29/03/2018

230 V - 50 Hz | schuko

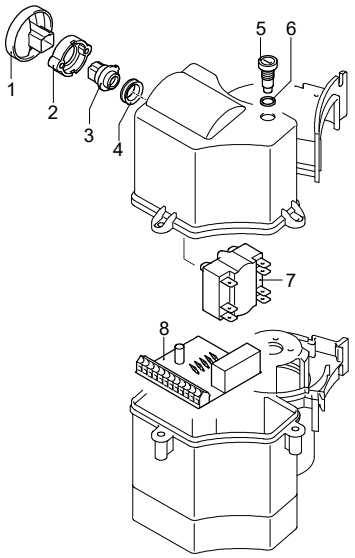

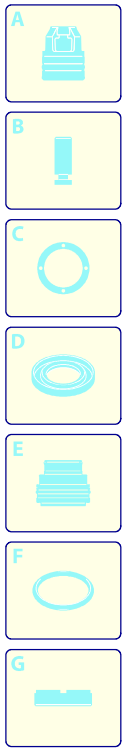

Validity	Pos.	Code	Description	Q
	1	3520270	Knob	1
	2	3520280	Shim	1
	3	3520300	Element	1
	4	3520290	O-ring	1
	5	3520340	O-ring	1
	6	3520350	Fuse holder	1
	7	3520850	Switch	1
	8	3520840	Board	1

ANNOVI REVERBERI
The Power of Experience

HOT 1509

Version:
Serial number:
Code: **26413**

29/03/2018

230 V - 50 Hz | schuko

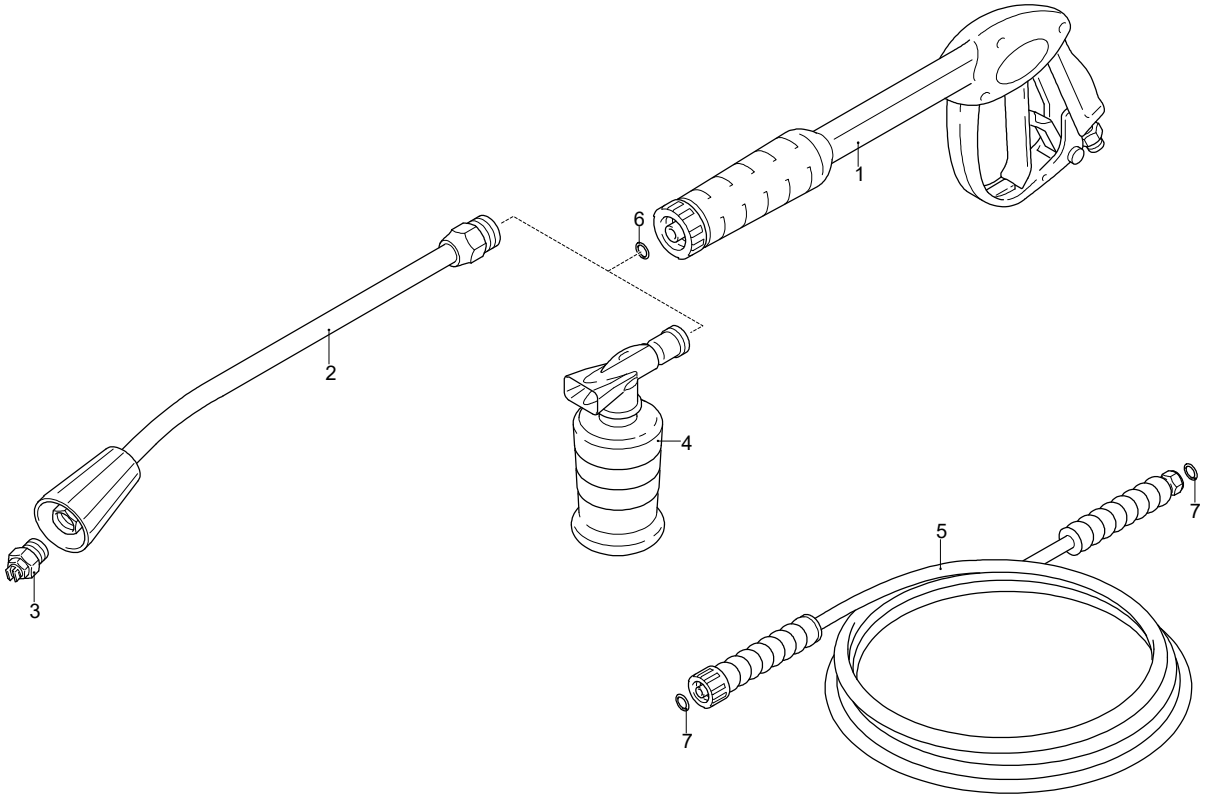

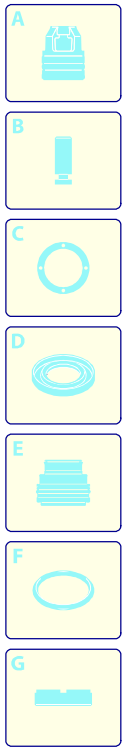

Validity	Pos.	Code	Description	Q
	1	41047	Gun	1
	2	50690	Lance	1
	3	3104	Nozzle	1
	4	40320	Tank	1
	5	3520550	High pressure hose	1
	6	391000	O-ring	1
	7	2000570	O-ring	2

UN_CE_0951-FP