ANNOVI REVERBERI
The Power of Experience

H4S LINE 508

Version:
Serial number:
Code: **23151**

10/11/2015

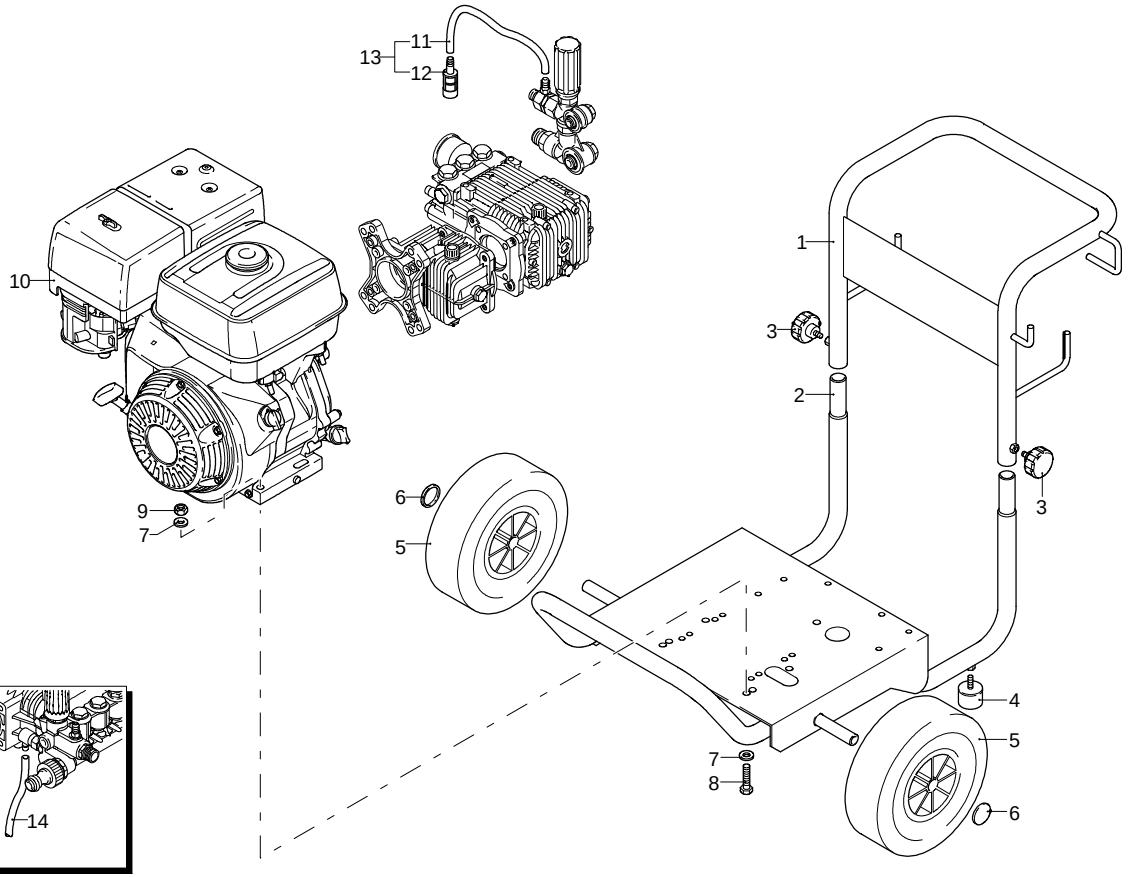

UN_CE_0134-JQ

Validity	Pos.	Code	Description	Q
	1	2281641	Handle	1
	2	2281631	Frame	1
	3	2281700	Knob	2
	4	2281690	Vibration damper	2
	5	380561	Wheel	2
	6	50016	Plug	2
	7	320620	Washer	8
	8	200230	Screw	4
	9	2240110	Nut	4
	10	4554	Motor	1
	11	1262790	Detergent hose	1
	12	1341030	Filter	1
	13	1269115	Hose assembly	1
	14	2180150	Detergent hose	1

ANNOVI REVERBERI
The Power of Experience

H4S LINE 508

Version:

Serial number:

Code: **23151**

10/11/2015

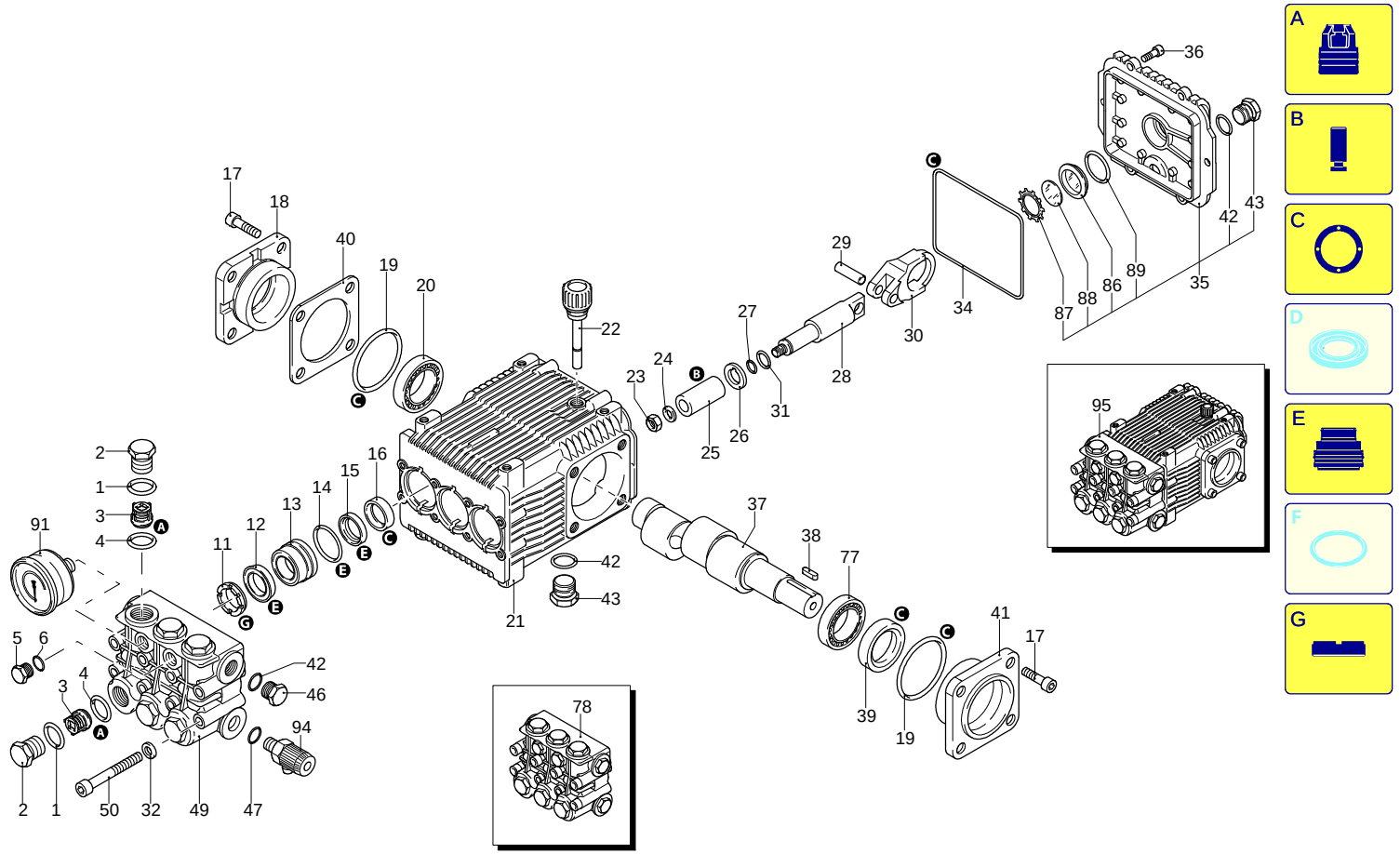

UN_CE_0137-HW

Validity	Pos.	Code	Description	Q
	1	960160	O-ring	6
	2	960850	Plug	6
	3	1389051	Complete valve	6
	4	880830	O-ring	6
	5	880581	Plug	1
	6	820510	O-ring	1
	11	960110	Ring	3
	12	1382740	Water seal	3
	13	1380090	Piston guide	3
	14	961240	O-ring	3
	15	880330	Water seal	3
	16	1383130	Ring	3
	17	850370	Screw	8
	18	1380050	Support	1
	19	640030	O-ring	2
	20	2280340	Bearing	1
	21	1382770	Pump body	1
	22	880130	Plug	1
	23	962010	Nut	3
	24	962000	Washer	3
	25	1380940	Piston	3
	26	1380950	Plate	3
	27	600180	O-ring	3
	28	1380920	Piston	3
	29	1380060	Pin	3
	30	1383020	Connecting-rod	3
	31	1080401	Ring	3
	32	1381850	Washer	8
	34	1780510	O-ring	1
	35	1789010	Cover	1
	36	1343510	Screw	6
	37	2280090	Shaft	1
	38	1380520	Key	1
	39	180340	Ring	1
	40	1380120	Shim 0.10 mm	1
	40	1380130	Shim 0.20 mm	1
	40	1380530	Shim 0.25 mm	1
	40	1382810	Shim 0.05 mm	1
	41	1380040	Support	1
	42	740290	O-ring	3
	43	1980740	Plug	2
	46	1980740	Plug	1
	47	180101	O-ring	1
	49	1381071	Head	1
	50	820150	Screw	8
	77	1383140	Bearing	1
	78	1389297	Head assembly	1
	86	1260250	Level gauge	1
	87	1260430	Ring	1
	88	1780690	Plate	1
	89	1140450	O-ring	1
	91	1381580	Pressure gauge	1
	94	50129	Valve	1
	95	20666	Pump assembly	1
	A	2864	Valve kit	1
	B	2757	Piston kit	1
	C	1855	Oil seal kit	1
	E	1857	Water seal kit	1
	G	1829	Support ring kit	1

ANNOVI REVERBERI
The Power of Experience

H4S LINE 508

Version:

Serial number:

Code: **23151**

10/11/2015

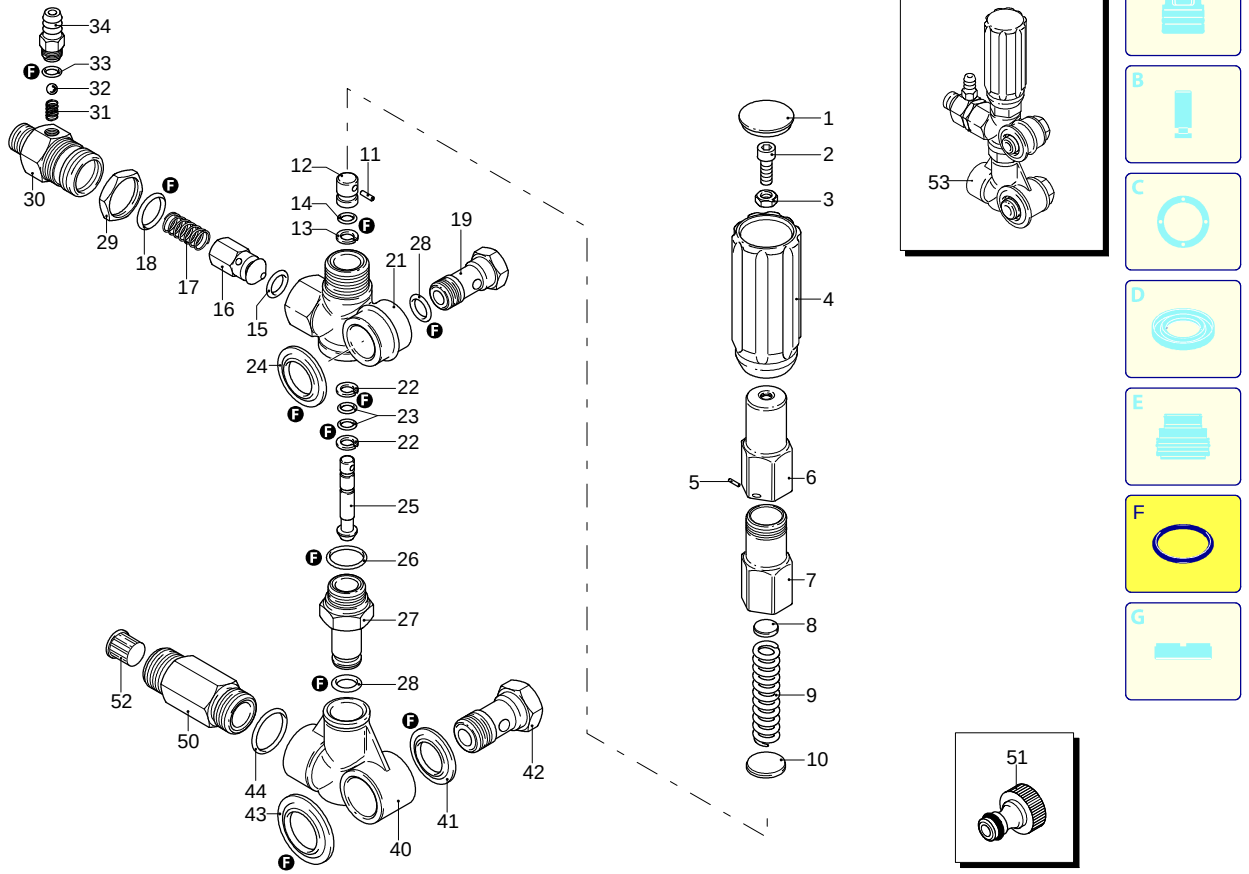

Validity	Pos.	Code	Description	Q
	1	1560580	Plug	1
	2	540290	Screw	1
	3	1660210	Nut	1
	4	1560400	Knob	1
	5	1080070	Pin	1
	6	1560420	Screw	1
	7	1560410	Guide	1
	8	1560440	Wobble plate	1
	9	1560350	Spring	1
	10	1080610	Wobble plate	1
	11	1080660	Pin	1
	12	1080540	Piston	1
	13	391000	O-ring	1
	14	1080640	Ring	1
	15	1560150	O-ring	1
	16	1560100	Shutter	1
	17	1560140	Spring	1
	18	180101	O-ring	1
	19	1540272	Screw	1
	21	1560010	Valve body	1
	22	1080550	Ring	2
	23	480480	O-ring	2
	24	1560280	Washer	1
	25	1560320	Piston	1
	26	880270	O-ring	1
	27	1560051	Fitting	1
	28	390080	O-ring	2
	29	1560510	Nut	1
	30	1560530	Fitting	1
	31	1560520	Spring	1
	32	1250280	Ball	1
	33	480480	O-ring	1
	34	1560490	Hose tail	1
	40	1540020	Suction fitting	1
	41	1540120	Washer	1
	42	1540090	Fitting	1
	43	1560290	Washer	1
	44	480440	O-ring	1
	50	1560880	Fitting	1
	51	40393	Fitting	1
	52	1340260	Filter	1
	53	22454	Complete valve	1
	F	2611	Gasket kit	1

UN_CE_0131-ET

ANNOVI REVERBERI
The Power of Experience

H4S LINE 508

Version:
Serial number:
Code: **23151**

10/11/2015

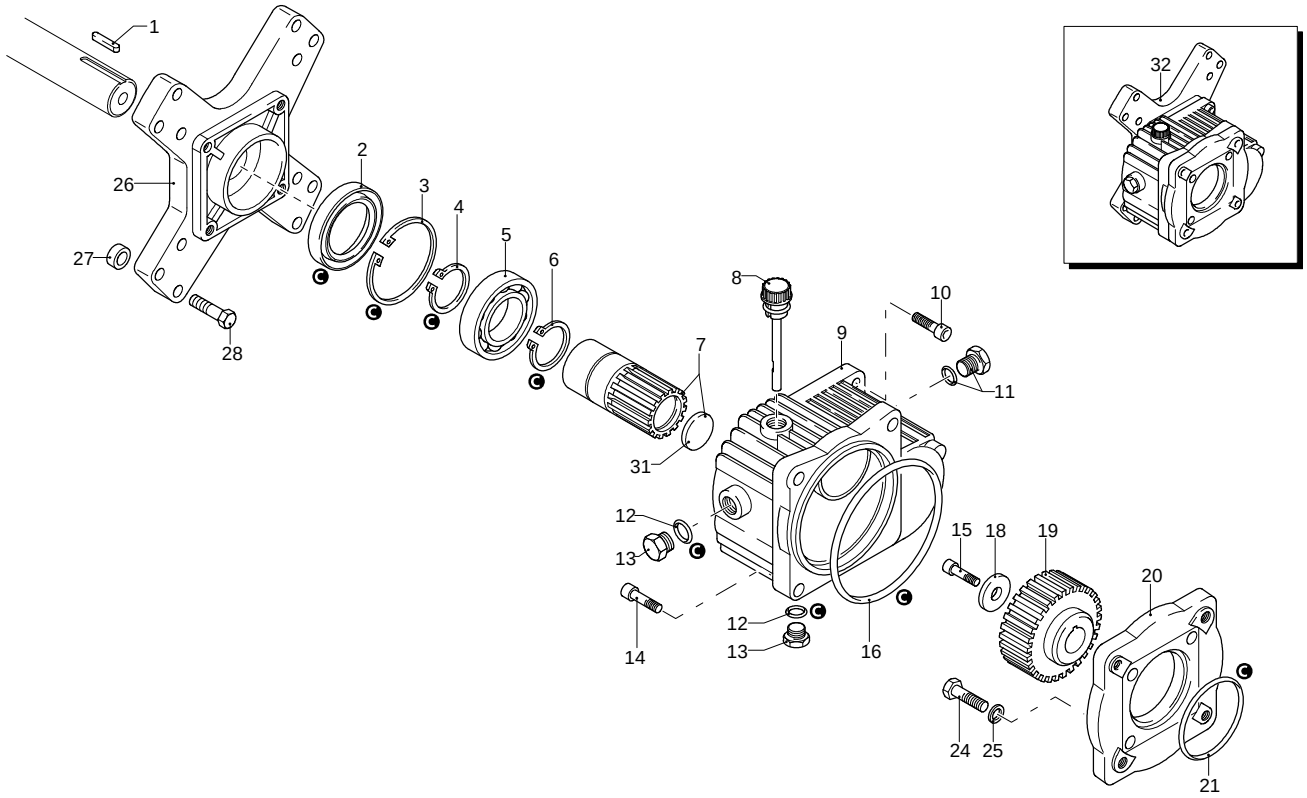

Validity	Pos.	Code	Description	Q
	1	960770	Key	1
	2	961800	Ring	1
	3	961790	Ring	1
	4	320240	Ring	1
	5	961781	Bearing	1
	6	320240	Ring	1
	7	1382420	Pinion	1
	8	1140370	Plug	1
	9	1320910	Box	1
	10	881940	Screw	4
	11	1980290	Level gauge	1
	12	740290	O-ring	2
	13	1980740	Plug	2
	14	160671	Screw	4
	15	880280	Screw	1
	16	1520590	O-ring	1
	18	780230	Washer	1
	19	1321230	Gear	1
	20	1320930	Flange	1
	21	640030	O-ring	1
	24	390450	Screw	4
	25	1260100	Washer	4
	26	1320940	Flange	1
	27	961770	Spacer	4
	28	961900	Screw	4
	31	1382530	Oil seal	1
	32	1690	Complete reduction gear	1
	C	2525	Oil seal kit	1

H4S LINE 508

Version:

Serial number:

Code: **23151**

10/11/2015

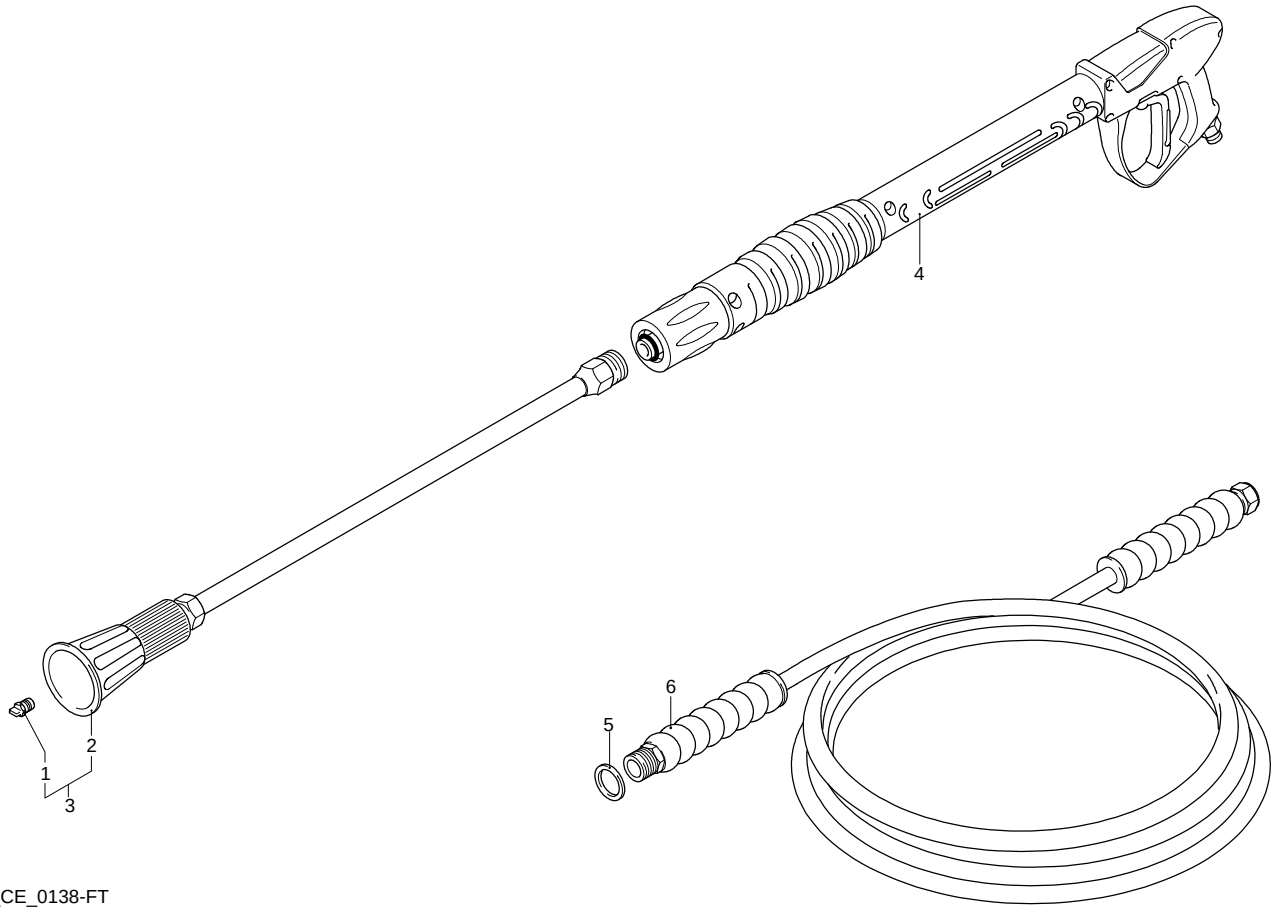

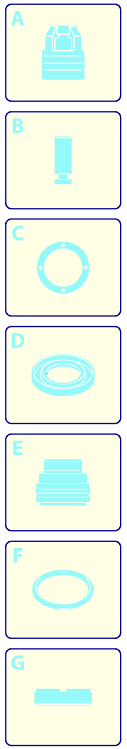

Validity	Pos.	Code	Description	Q
	1	3082	Nozzle	1
	2	40541	Lance+lance head without nozzle	1
	3	40650	Lance+lance head	1
	4	41322	Gun	1
	5	1540110	Washer	1
	6	3119	High pressure hose	1

UN_CE_0138-FT

20m Extension hose kit

Version:

Serial number:

Code:

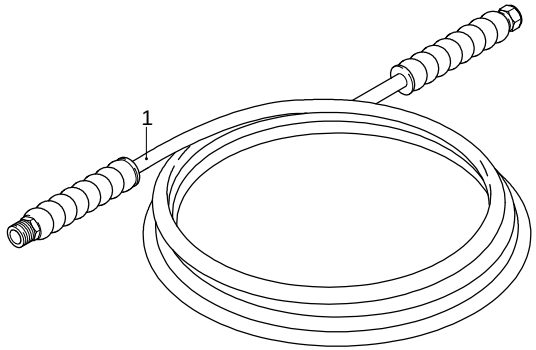

Validity	Pos.	Code	Description	Q
	1	40643	High pressure hose	1

UN_CE_0730-EU

ANNOVI REVERBERI
The Power of Experience

Sandblast Pro

Version:

Serial number:

Code:

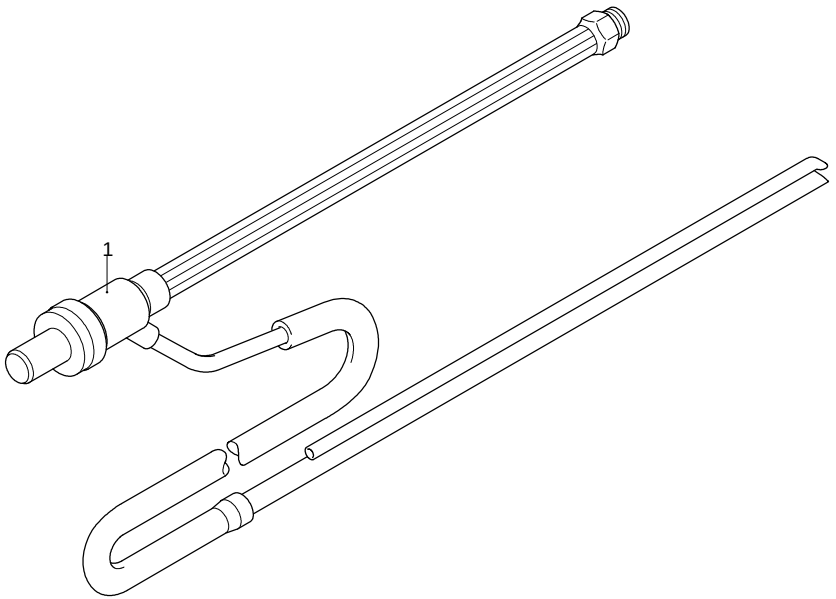

Validity	Pos.	Code	Description	Q
	1	40628	Sanding lance	1

UN_CE_0016-BX

ANNOVI REVERBERI
The Power of Experience

DRS

Version:

Serial number:

Code:

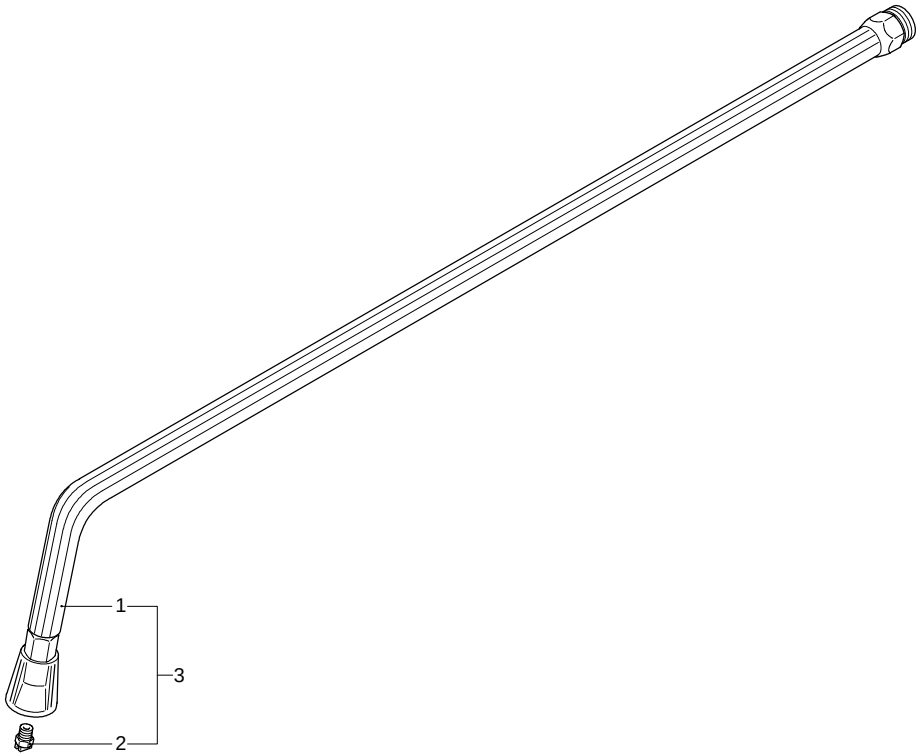

UN_CE_0020-EU

Validity	Pos.	Code	Description	Q
	1	3393	Underbody lance without nozzle	1
	2	3082	Nozzle	1
	3	40634	Underbody lance	1

ANNOVI REVERBERI
The Power of Experience

Rotopower Pro

Version:

Serial number:

Code:

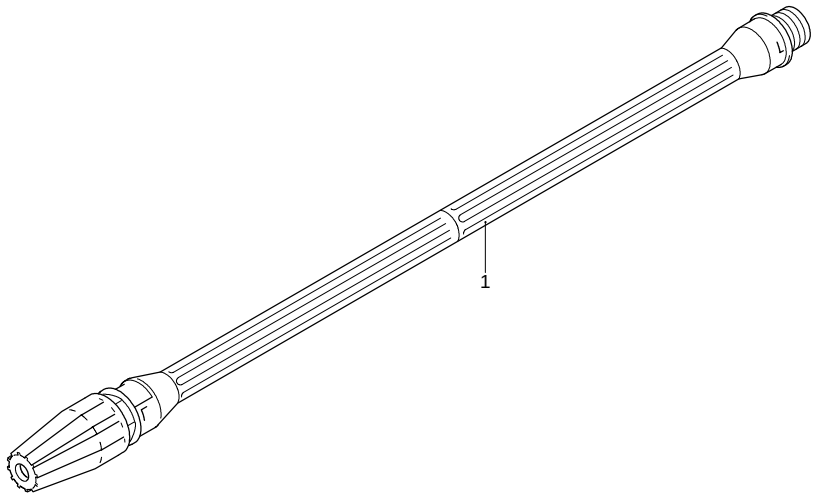

Validity	Pos.	Code	Description	Q
	1	40803	Lance+rotopower	1

UN_CE_0064-EU

Rotating Brush Pro

Version:

Serial number:

Code:

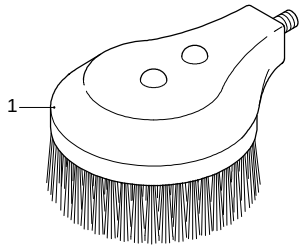

Validity	Pos.	Code	Description	Q
	1	3027	Roller brush	1

UN_CE_0132-BX

ANNOVI REVERBERI
The Power of Experience

DRE

Version:

Serial number:

Code:

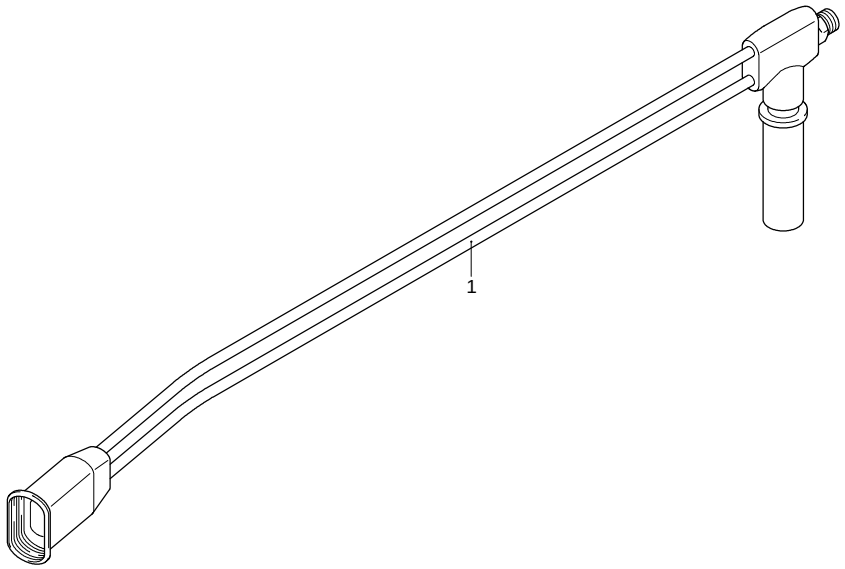

Validity	Pos.	Code	Description	Q
	1	3160620	Lance	1

UN_CE_0135-BX

RE90 - RE120 - RE150

Version:

Serial number:

Code:

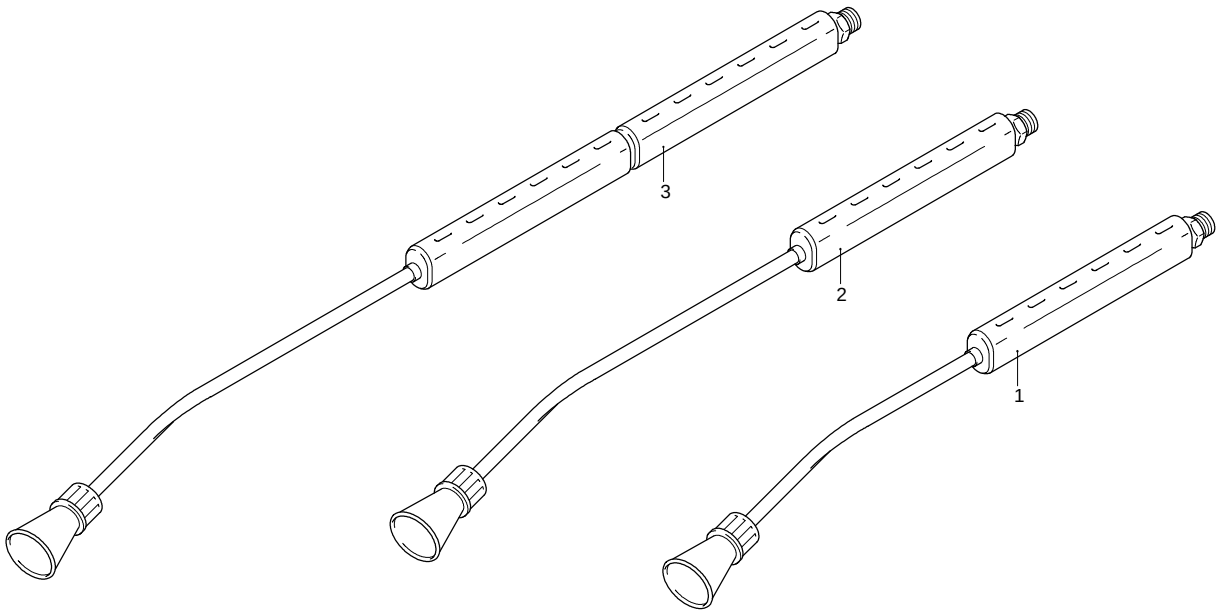

Validity	Pos.	Code	Description	Q
	2	40653	Lance	1
	1	40652	Lance	1
	3	40654	Lance	1

UN_CE_0133-BX

ANNOVI REVERBERI
The Power of Experience

Pipe Jet 8m - 16m

Version:

Serial number:

Code:

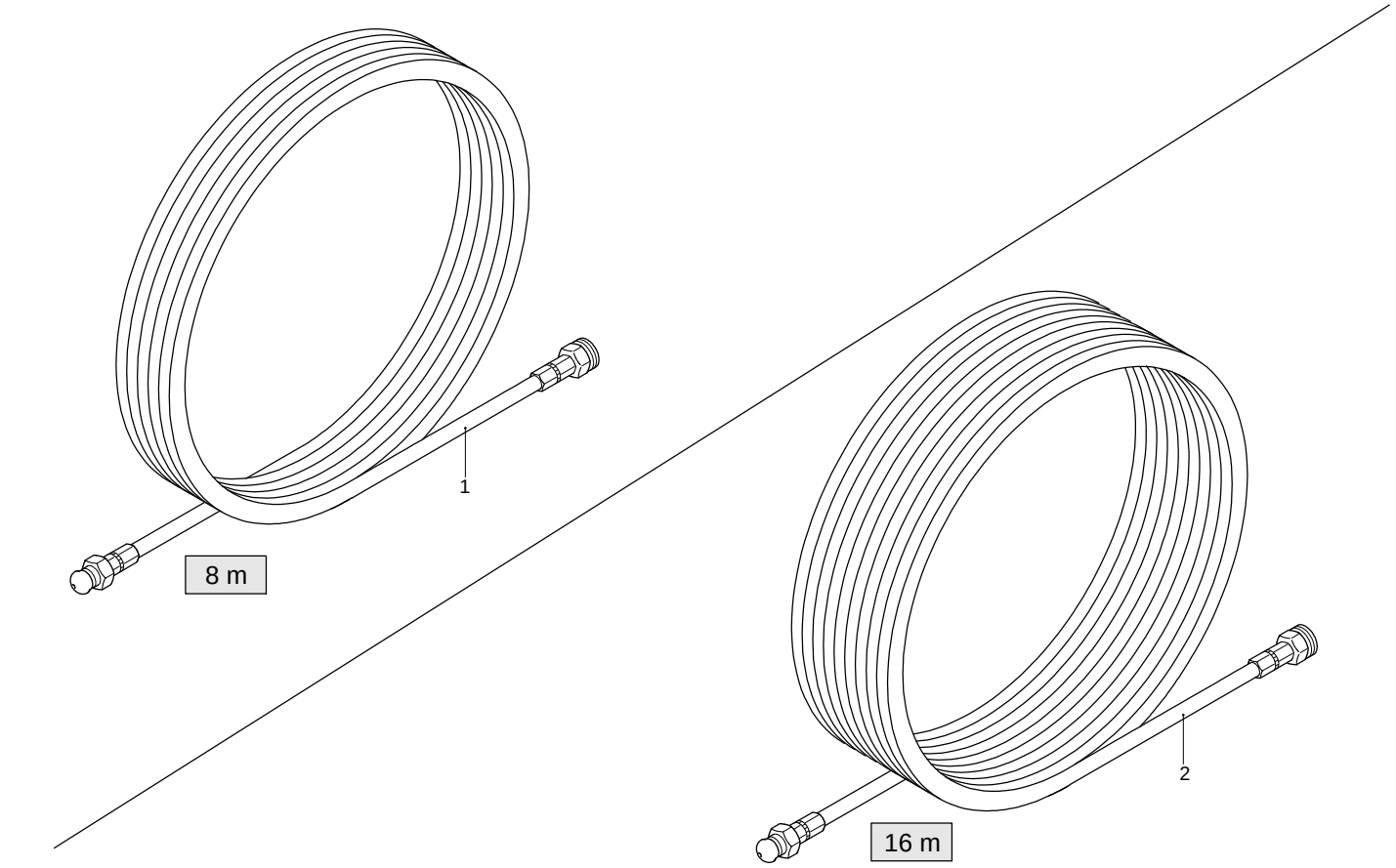

UN_CE_0066-EU

Validity	Pos.	Code	Description	Q
	1	40109	Hose cleaning accessory	1
	2	40110	Hose cleaning accessory	1

Click Fast kit (Ø ¾")

Version:

Serial number:

Code:

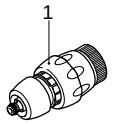

Validity	Pos.	Code	Description	Q
	1	40439	Fitting	1

UN_CE_0056-EU

Detergent chemicals

Version:

Serial number:

Code:

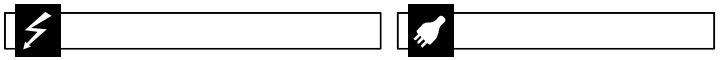

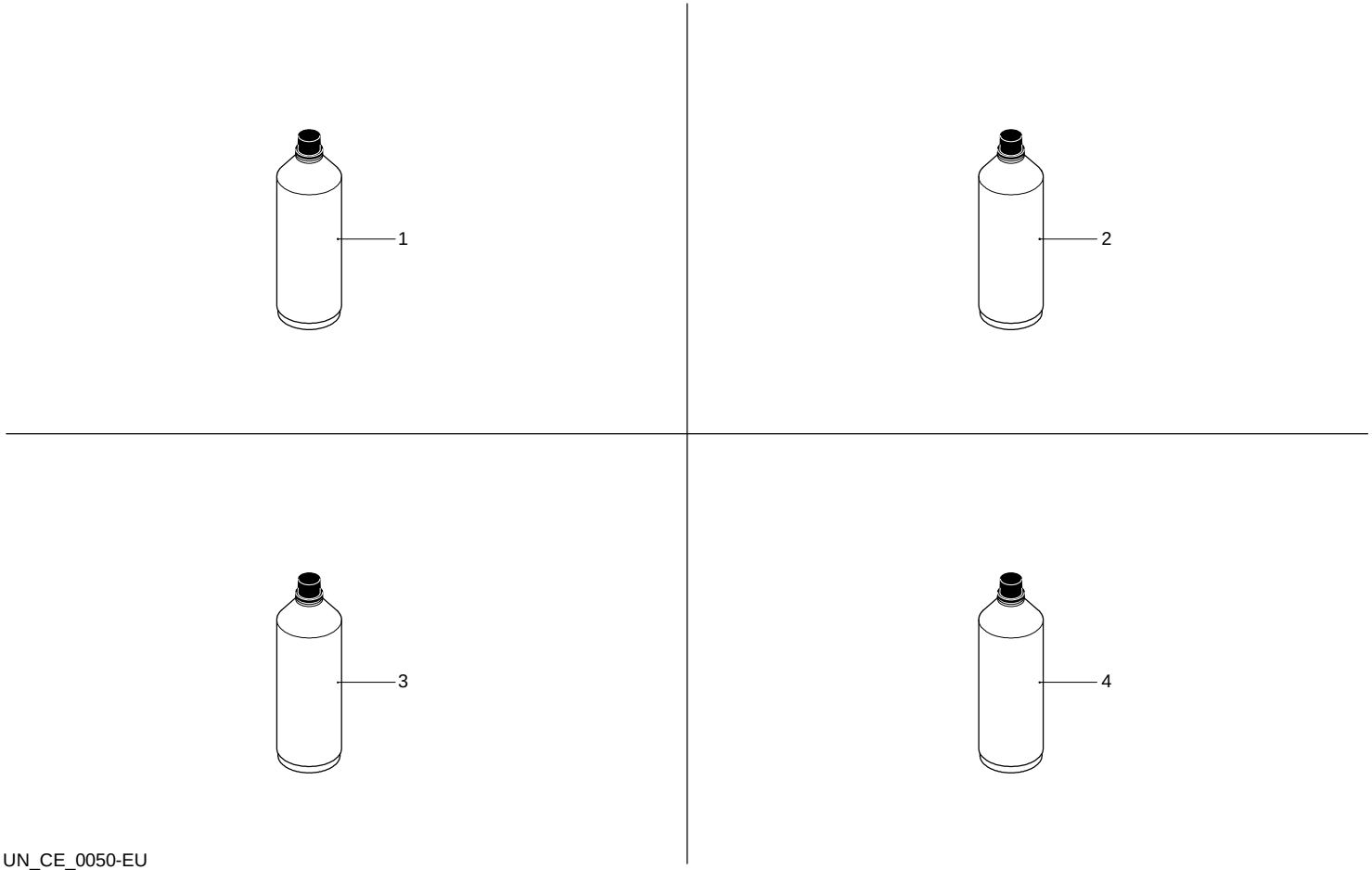

Validity	Pos.	Code	Description	Q
	1	40613	Detergent (Car)	1
	2	40614	Detergent (Motorcycles)	1
	3	40615	Detergent (Boats)	1
	4	40616	Detergent (Universal)	1

UN_CE_0050-EU

Sand (5 kg)

Version:

Serial number:

Code:

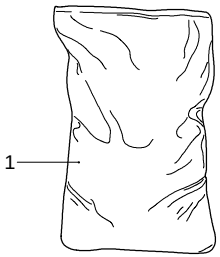

Validity	Pos.	Code	Description	Q
	1	3207	Sand	1

UN_CE_0048-EU

Water filter kit

Version:

Serial number:

Code:

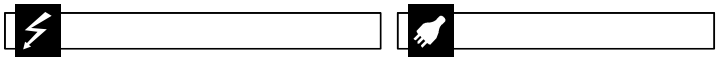

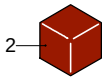

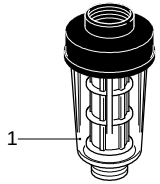

Validity	Pos.	Code	Description	Q
	1	40743	Filter	1
	2	40744	Filter (with packaging)	1

UN_CE_0051-EU

Wash Nozzles

Version:

Serial number:

Code:

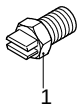

Validity	Pos.	Code	Description	Q
	1	3082	Nozzle	1

UN_CE_0136-BX

Foam Nozzle

Version:

Serial number:

Code:

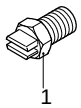

Validity	Pos.	Code	Description	Q
	1	3251	Nozzle	1

UN_CE_0136-BX