ANNOVI REVERBERI
The Power of Experience

H4S LINE 308

Version:

Serial number:

Code: **23149**

10/01/2014

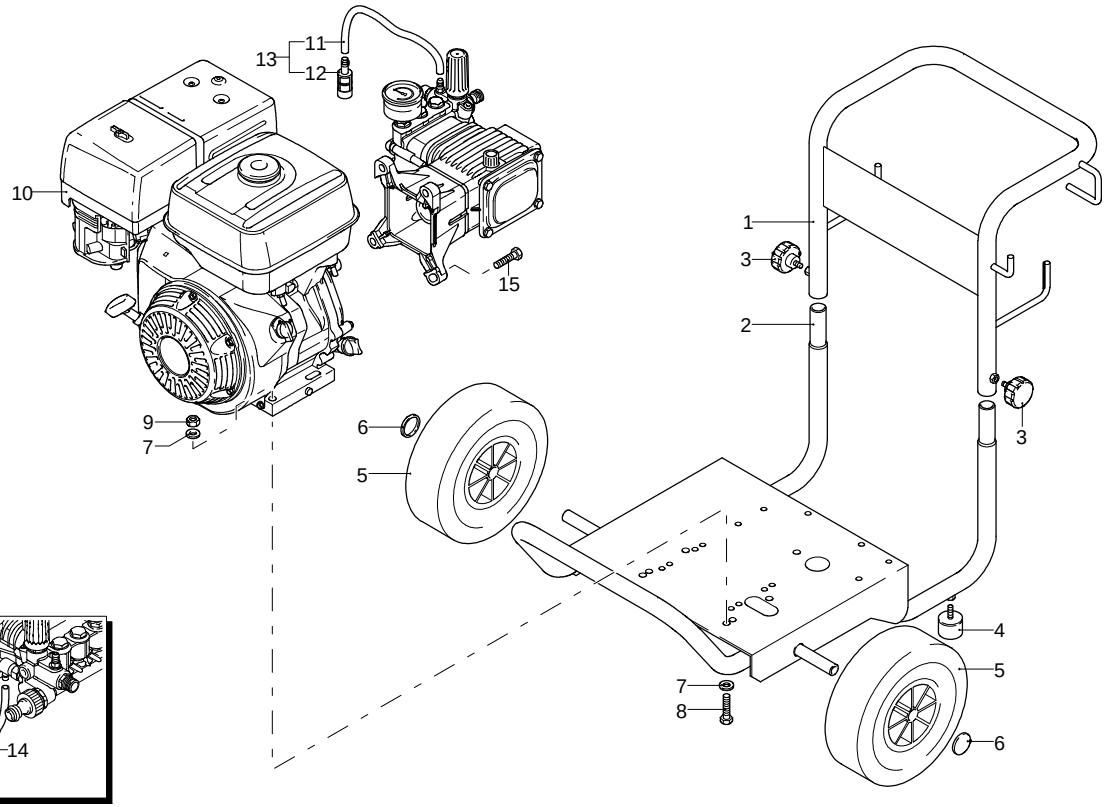

UN_CE_0120-AR

Validity	Pos.	Code	Description	Q
	1	2281641	Handle	1
	2	2281631	Frame	1
	3	2281700	Knob	2
	4	2281690	Vibration damper	2
	5	380561	Wheel	2
	6	50016	Plug	2
	7	320620	Washer	8
	8	200230	Screw	4
	9	2240110	Nut	4
	10	4926	Motor	1
	11	1262790	Detergent hose	1
	12	1341030	Filter	1
	13	1269115	Hose assembly	1
	14	2180150	Detergent hose	1
	15	961900	Screw	4

ANNOVI REVERBERI
The Power of Experience

H4S LINE 308

Version:

Serial number:

Code: **23149**

10/01/2014

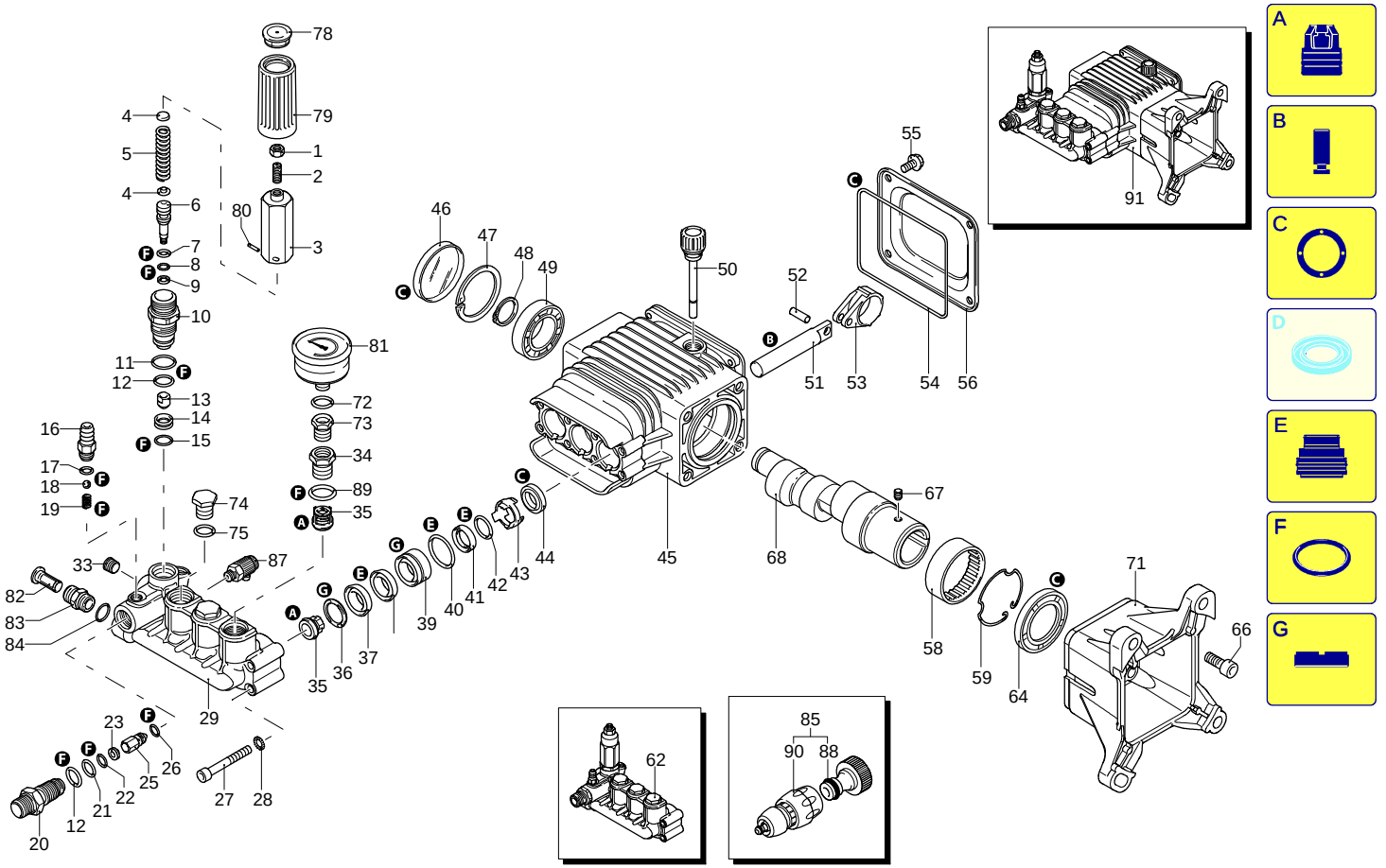

UN_CE_0121-HW

Validity	Pos.	Code	Description	Q
	1	1980300	Nut	1
	2	392840	Screw	1
	3	1980390	Insert	1
	4	1980220	Wobble plate	2
	5	2760410	Spring	1
	6	2760400	Piston	1
	7	2260100	O-ring	1
	8	660190	O-ring	1
	9	2760210	Ring	1
	10	2760570	Guide	1
	11	1200690	O-ring	4
	12	394280	O-ring	2
	13	2260070	Shutter	1
	14	2760090	Seat	1
	15	770140	O-ring	1
	16	1982520	Hose tail	1
	17	480480	O-ring	1
	18	1250280	Ball	1
	19	1560520	Spring	1
	20	2760230	Fitting	1
	21	2760270	O-ring	1
	22	1470210	O-ring	1
	23	2760120	Insert	1
	25	2760130	Shutter	1
	26	2101770	O-ring	1
	27	801080	Screw	8
	28	1381550	Washer	8
	29	2760330	Head	1
	33	2760260	Plug	1
	34	2760590	Plug	3
	35	2769050	Complete valve	6
	36	2760220	Ring	3
	37	1342761	Water seal	3
	38	1981580	Ring	1
	39	1981570	Piston guide	3
	40	770260	O-ring	3
	41	1260440	Water seal	3
	42	640070	O-ring	3
	43	2760310	Spacer	3
	44	1260460	Oil seal	3
	45	2760010	Pump body	1
	46	1266740	Oil seal	1
	47	1260790	Ring	1
	48	1780550	Ring	1
	49	1780490	Bearing	1
	50	880130	Plug	1
	51	2760040	Piston	3
	52	1780050	Pin	3
	53	1780710	Connecting-rod	3
	54	2760280	O-ring	1
	55	802190	Screw	4
	56	2760110	Cover	1
	58	1321190	Bearing	1
	59	1321080	Ring	1
	62	2769211	Head assembly	1
	64	480671	Ring	1
	66	180030	Screw	4
	67	820440	Screw	1
	68	1780330	Shaft	1
	71	2760290	Flange	1
	72	2761090	Washer	1
	73	2761080	Fitting	1

ANNOVI REVERBERI
The Power of Experience

H4S LINE 308

Version:

Serial number:

Code: **23149**

10/01/2014

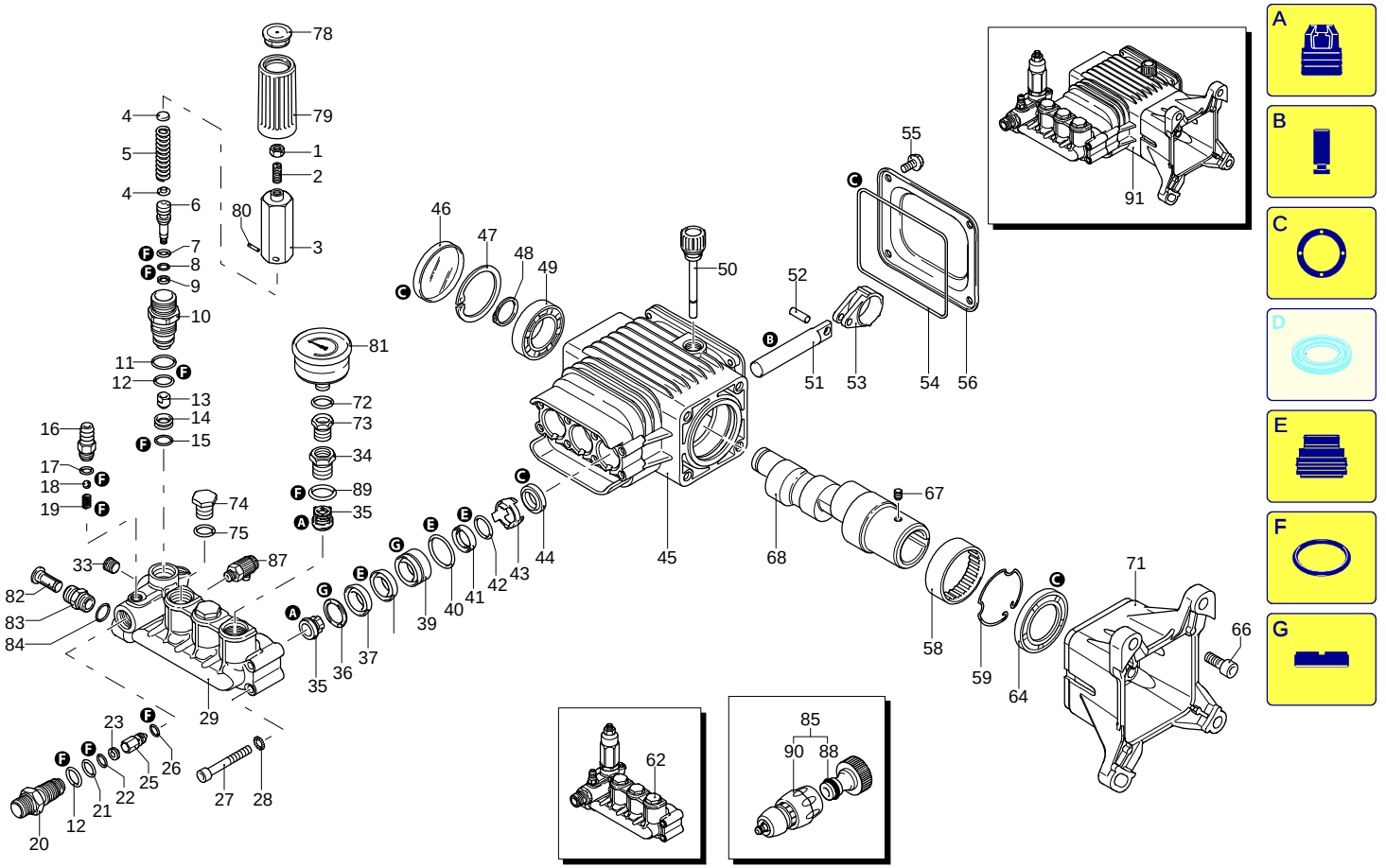

UN_CE_0121-HW

Validity	Pos.	Code	Description	Q
	74	2760180	Plug	2
	75	1200690	O-ring	2
	78	1981770	Plug	1
	79	1981780	Knob	1
	80	1080070	Pin	2
	81	1381580	Pressure gauge	1
	82	1340260	Filter	1
	83	2500490	Fitting	1
	84	740290	O-ring	1
	85	3212	Fitting kit	1
	87	2760630	Valve	1
	88	1461470	Fitting	1
	89	2761090	Washer	1
	90	40086	Fitting	1
	91	23565	Pump	1
	A	2186	Valve kit	1
	B	2187	Piston kit	1
	C	2188	Oil seal kit	1
	E	2189	Water seal kit	1
	F	2190	Gasket kit	1
	G	2191	Support ring kit	1

ANNOVI REVERBERI
The Power of Experience

H4S LINE 308

Version:
Serial number:
Code: **23149**

10/01/2014

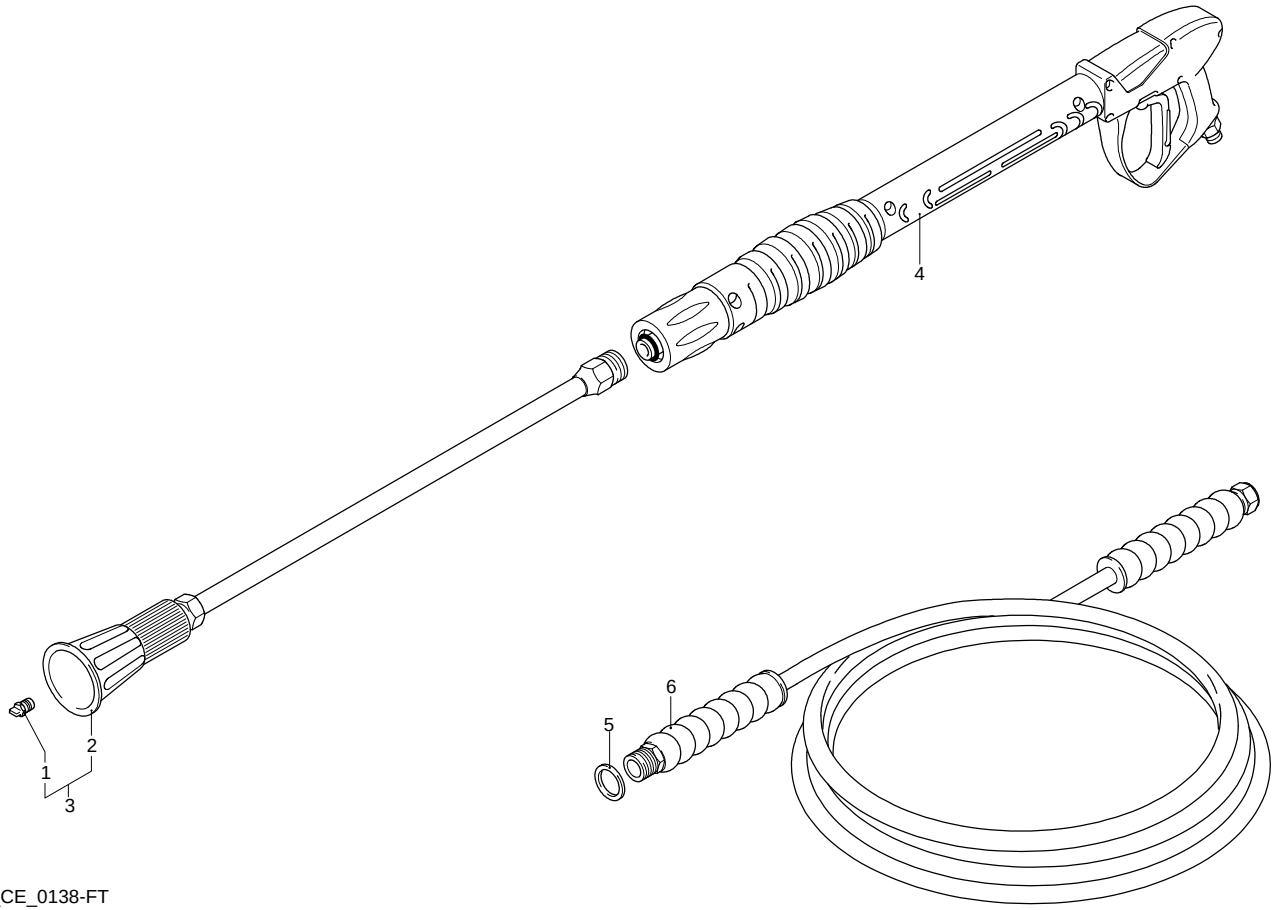

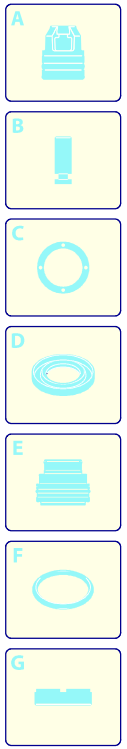

Validity	Pos.	Code	Description	Q
	1	3082	Nozzle	1
	2	40541	Lance+lance head without nozzle	1
	3	40651	Lance+lance head	1
	4	41322	Gun	1
	5	1540110	Washer	1
	6	3119	High pressure hose	1

UN_CE_0138-FT