ANNOVI REVERBERI
The Power of Experience

H4S LINE 108

Version:

Serial number:

Code: **23147**

10/01/2014

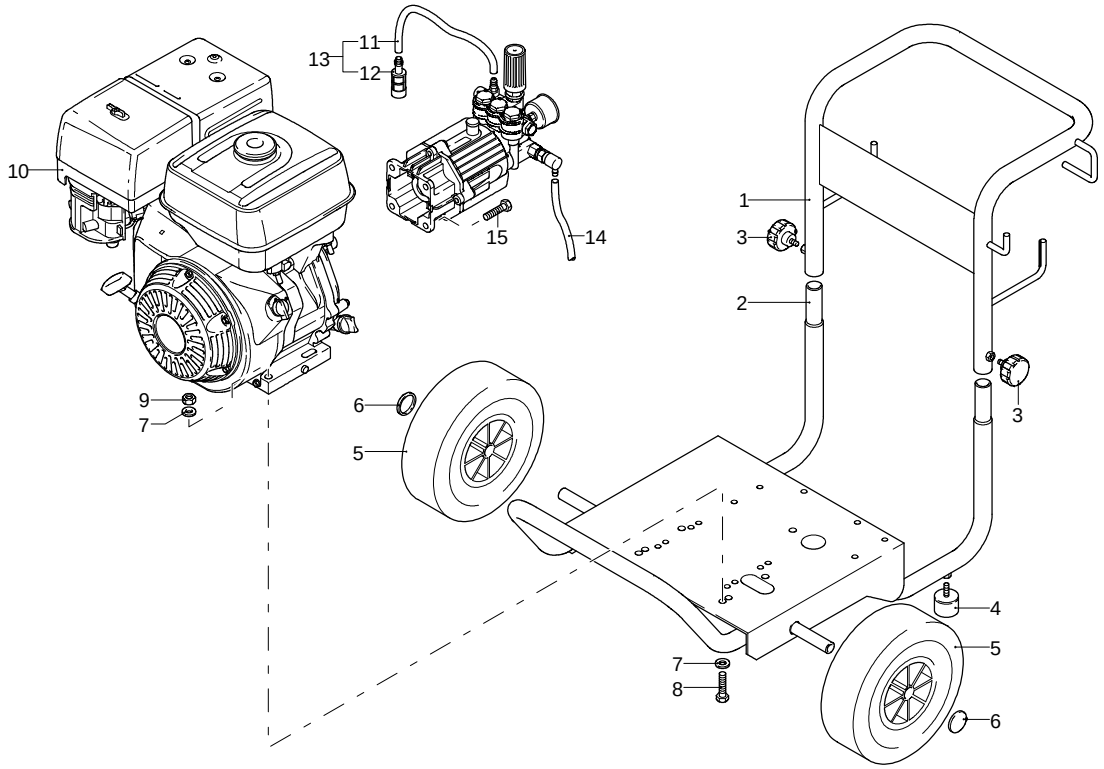

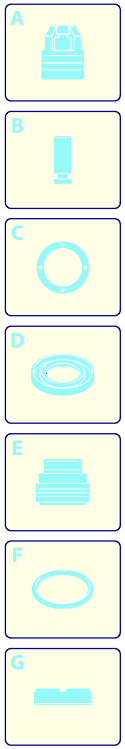

Validity	Pos.	Code	Description	Q
	1	2281641	Handle	1
	2	2281631	Frame	1
	3	2281700	Knob	2
	4	2281690	Vibration damper	2
	5	380561	Wheel	2
	6	50016	Plug	2
	7	390311	Washer	8
	8	380250	Screw	4
	9	160311	Nut	4
	10	4903	Motor	1
	11	1262790	Detergent hose	1
	12	1341030	Filter	1
	13	1269115	Hose assembly	1
	14	2180150	Detergent hose	1
	15	620440	Screw	4

UN_CE_0118-AR

ANNOVI REVERBERI
The Power of Experience

H4S LINE 108

Version:
Serial number:
Code: **23147**

10/01/2014

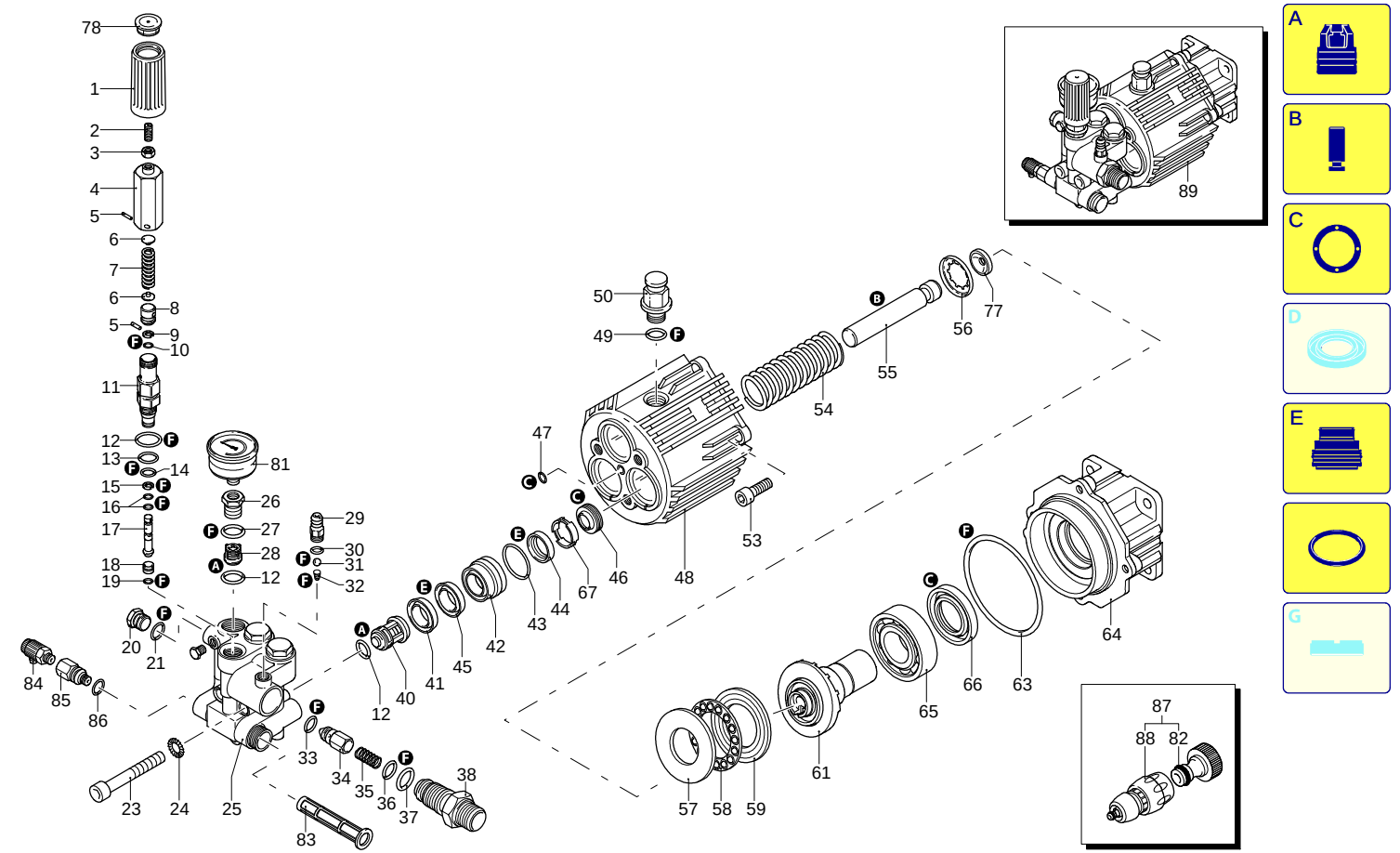

UN_CE_0119-HW

Validity	Pos.	Code	Description	Q
	1	1981780	Knob	1
	2	1980300	Nut	1
	3	1980470	Screw	1
	4	1980390	Insert	1
	5	1080070	Pin	2
	6	1980220	Wobble plate	2
	7	1271070	Spring	1
	8	1080041	Piston	1
	9	1080401	Ring	1
	10	1080250	O-ring	1
	11	1980210	Piston guide	1
	12	880830	O-ring	7
	13	740290	O-ring	1
	14	800560	O-ring	1
	15	1271170	Ring	1
	16	1080190	O-ring	2
	17	1271160	Piston	1
	18	1980200	Seat	1
	19	1470210	O-ring	1
	20	880581	Plug	1
	21	820510	O-ring	1
	23	1980310	Screw	3
	24	650530	Washer	3
	25	1982450	Head	1
	26	1260162	Plug	3
	27	960160	O-ring	3
	28	1269050	Complete valve	3
	29	1982520	Hose tail	1
	30	480480	O-ring	1
	31	1250280	Ball	1
	32	1560520	Spring	1
	33	1460430	O-ring	1
	34	1540170	Shutter	1
	35	1080091	Spring	1
	36	394280	O-ring	1
	37	1200690	O-ring	1
	38	1270091	Injector	1
	40	1989050	Complete valve	3
	41	1342761	Water seal	3
	42	1981570	Piston guide	3
	43	770260	O-ring	3
	44	1260440	Water seal	3
	45	1981580	Ring	3
	46	1980410	Oil seal	3
	47	770090	O-ring	1
	48	1983050	Pump body	1
	49	740290	O-ring	1
	50	1980380	Plug	1
	53	180030	Screw	4
	54	1981140	Spring	3
	55	1981120	Piston	3
	56	1980150	Ring	3
	57	1983100	Fifth wheel	1
	58	1980250	Fifth wheel	1
	59	1980240	Fifth wheel	1
	61	1982840	Shaft	1
	63	1980340	O-ring	1
	64	1981420	Flange	1
	65	1982360	Bearing	1
	66	1140380	Ring	1
	67	1980430	Spacer	3
	77	1981130	Wobble plate	3

ANNOVI REVERBERI
The Power of Experience

H4S LINE 108

Version:
Serial number:
Code: **23147**

10/01/2014

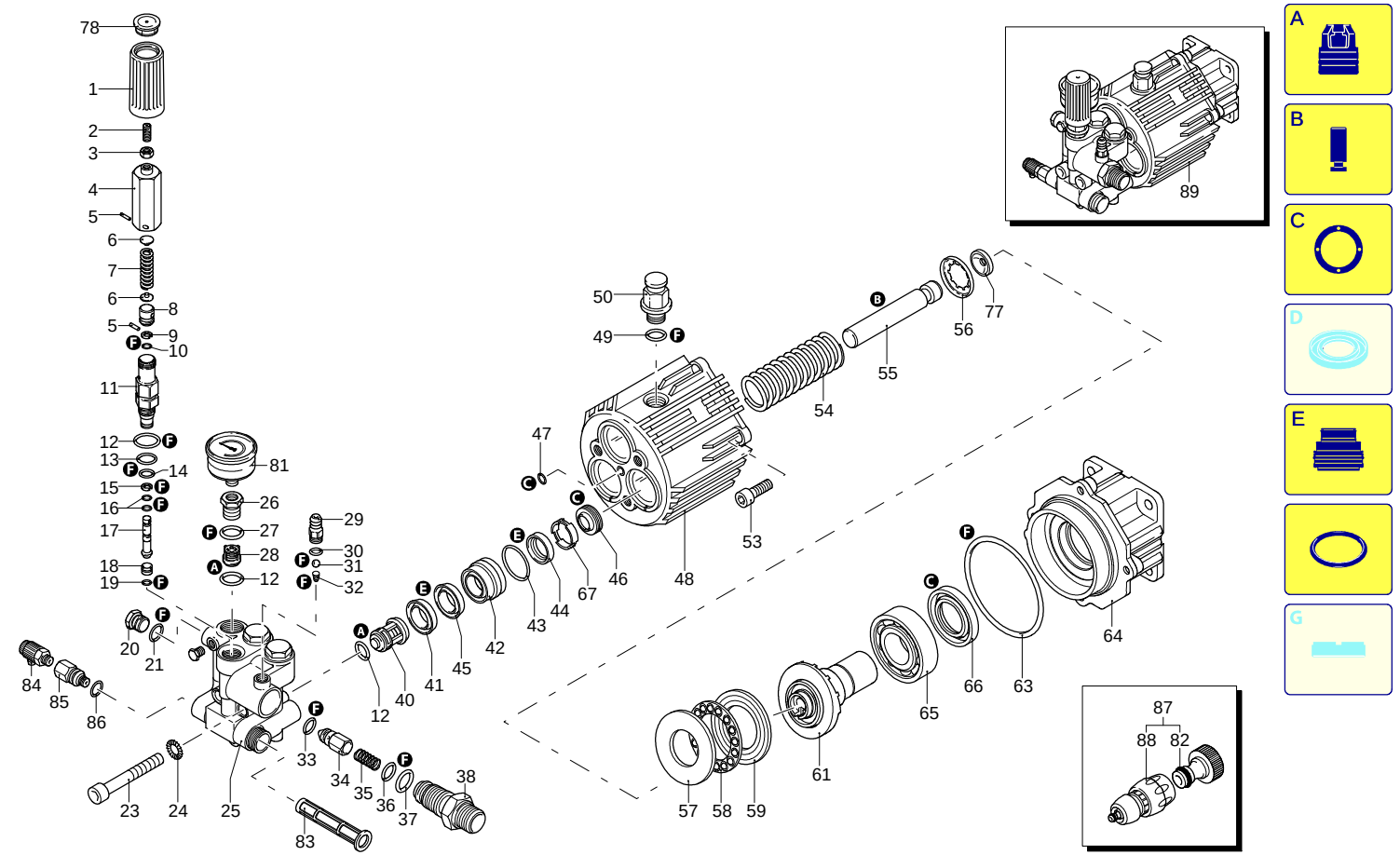

UN_CE_0119-HW

Validity	Pos.	Code	Description	Q
	78	1981770	Plug	1
	81	3232	Pressure gauge	1
	82	1270940	Fitting	1
	83	1260660	Filter	1
	84	2760630	Valve	1
	85	1983550	Fitting	1
	86	820510	O-ring	1
	87	40111	Fitting kit	1
	88	40086	Fitting	1
	89	22347	Pump assembly	1
	A	2869	Valve kit	1
	B	2513	Piston kit	1
	C	2797	Oil seal kit	1
	E	2167	Water seal kit	1
	F	2799	Gasket kit	1

ANNOVI REVERBERI
The Power of Experience

H4S LINE 108

Version:
Serial number:
Code: **23147**

10/01/2014

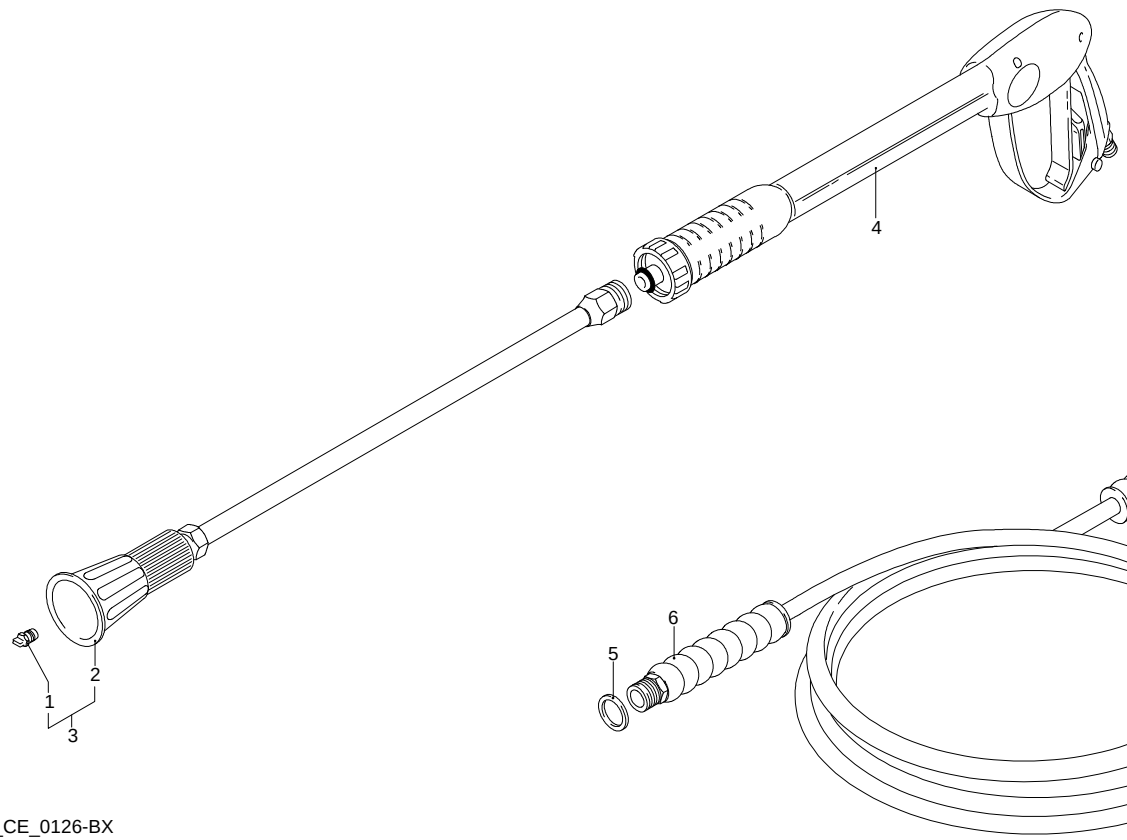

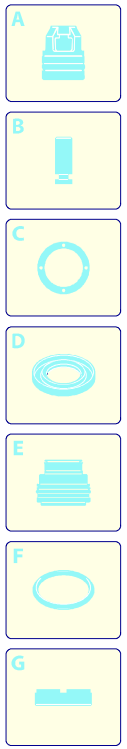

Validity	Pos.	Code	Description	Q
	1	3195	Nozzle	1
	2	40541	Lance+lance head without nozzle	1
	3	40649	Lance+lance head	1
	4	40770	Gun	1
	5	1540110	Washer	1
	6	1700190	High pressure hose	1

UN_CE_0126-BX