5/24/2021

2” Self-Priming Centrifugal Pump

Model: GNOK1-1/2/2DL-D1.5C

Price Code: 60-61D4-D1.5C

Driver: Leeson 60Hz Electric Motor (1.5 HP) Three Phase

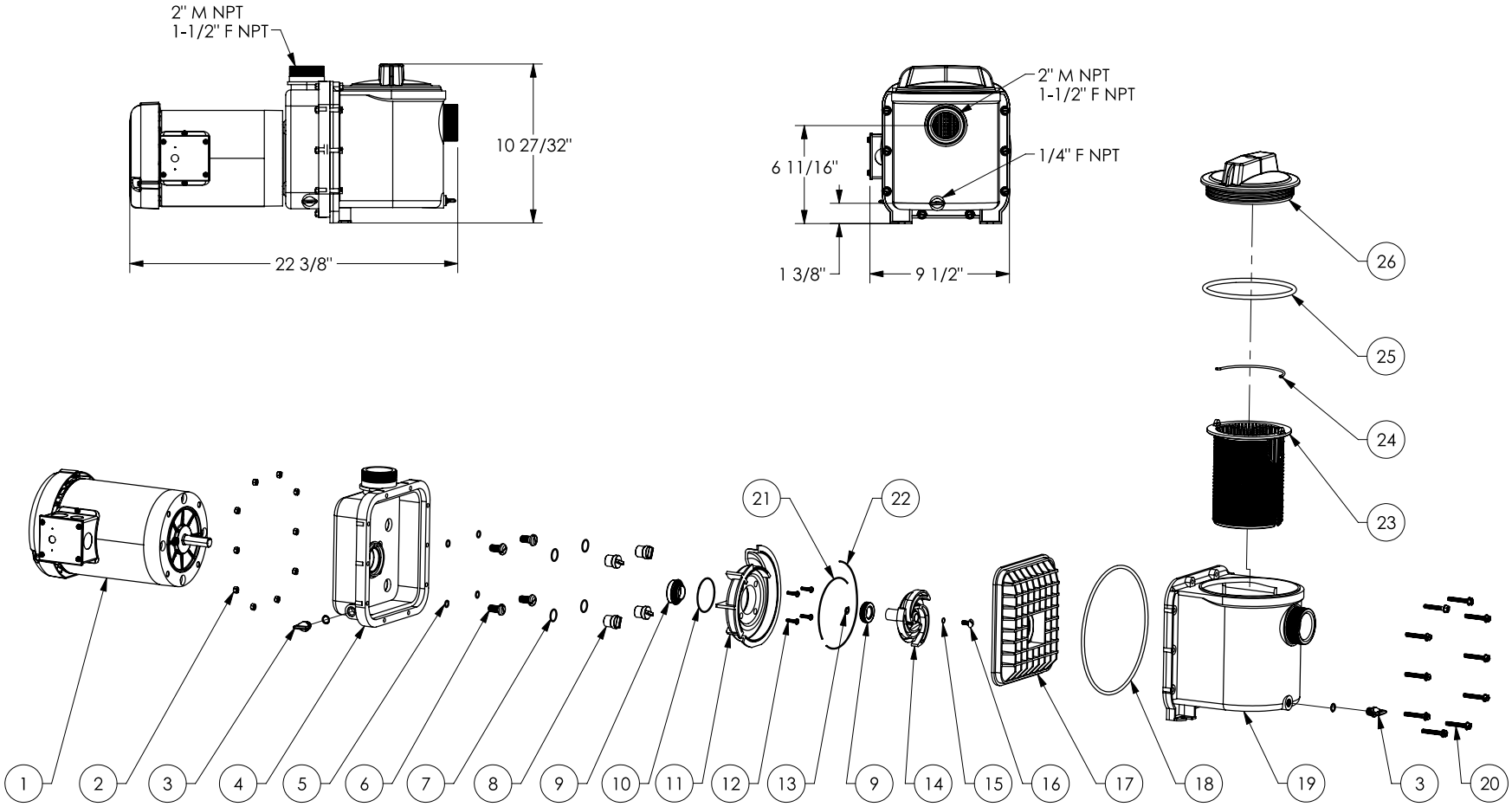

PACER
Division of ASM Industries, Inc.

2” Self-Priming Centrifugal Pump

Model: GNOK1-1/2/2DL-D1.5C

Price Code: 60-61D4-D1.5C

Driver: Leeson 60Hz Electric Motor (1.5 HP) Three Phase

NO.	DESCRIPTION			QTY	PART NO.
1	Leeson 1.5 HP Electric Motor		3Φ	1	62-1251-G
2	Nut, Body Bolt	SS	1/4-20 x 7/8"	10	58-0721-10
3	Drain Plug and O-Ring	Noryl EPDM		2	58-0723-22
4	Body	Noryl		1	58-1801-20
5	O-Ring, Mounting Bolt	EPDM		4	58-1824-72
6	Mounting Bolt	SS	3/8-16 x 7/8"	4	58-1838-10
7	O-Ring, Mounting Bolt Plug	EPDM		4	58-1245-72
8	Mounting Bolt Plug	Noryl		4	58-1833-20
9	Shaft Seal	EPDM, SS 316, carbon/ceramic 3/4"		1	58-0714-12
10	O-Ring, Volute	EPDM		1	58-1822-72
11	Volute	Noryl		1	58-1802-20
12	Volute Screw	SS	#10-16 x 3/4"	4	58-1835-10
13	Shim, Impeller	SS	.006” .015” .030”	As Req.	58-1841-11 58-1841-12 58-1841-13
14	Impeller	Noryl		1	58-0620-20
15	O-Ring, Impeller Screw	EPDM		1	58-1845-72
16	Impeller Screw	SS	1/4-28 x 7/16"	1	58-1888-10
17	Volute Plate	Noryl		1	58-1831-20
18	O-Ring, Volute Plate	EPDM		1	58-1858-72
19	Housing, Strainer Basket	Noryl		1	58-1816-20
20	Body Bolt	SS	1/4"-20 x 1-5/8"	10	58-1039-10
21	O-Ring Segment, Left	EPDM		1	58-1812-72
22	O-Ring Segment, Right	EPDM		1	58-1814-72
23	Strainer Basket	PP		1	58-1809-40

PACER
Division of ASM Industries, Inc.

2” Self-Priming Centrifugal Pump

Model: GNOK1-1/2/2DL-D1.5C

Price Code: 60-61D4-D1.5C

Driver: Leeson 60Hz Electric Motor (1.5 HP) Three Phase

24	Handle, Strainer Basket	SS	1	58-1819-10
25	O-Ring, Housing Cover	EPDM	1	58-1820-72
26	Housing Cover	Noryl	1	58-1818-20