GKD 5.0/60-S

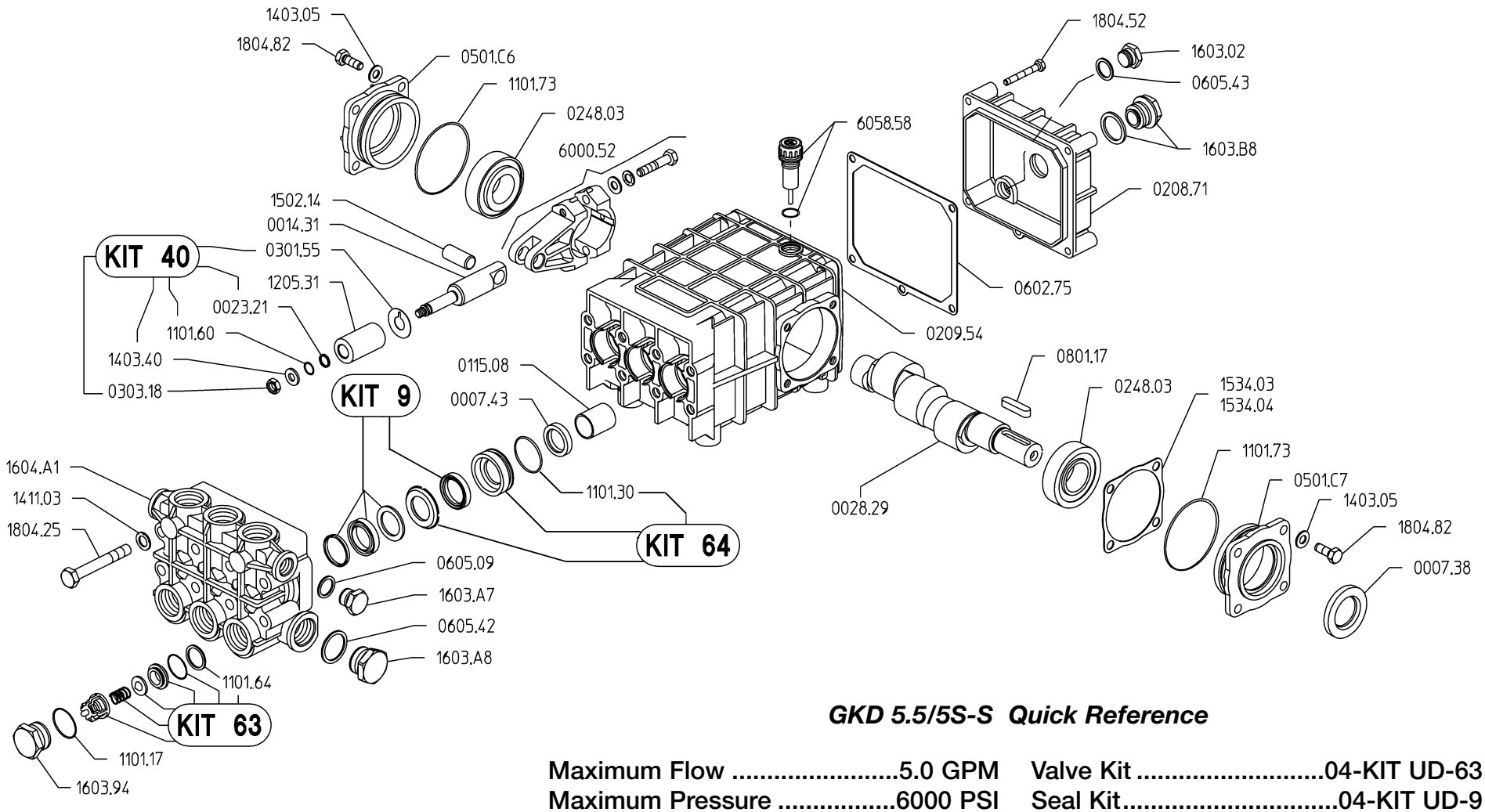

GKD 5.5/5S-S Quick Reference

Maximum Flow .....5.0 GPM	Valve Kit 04-KIT UD-63
Maximum Pressure .....6000 PSI	Seal Kit.....04-KIT UD-9
Rated Pump Speed .....1750 RPM	Brass Kit 04-KIT UD-64
Oil Capacity.....40 oz. UDOR LUBE or SAE 30W Non-Detergent Oil	Plunger Bolt Kit 04-KIT UD-40
	Plunger Part # 04-1205.31
	Plunger Diameter.....20 MM