ANNOVI REVERBERI
The Power of Experience

FRESH FOG

Version:
Serial number:
Code: **12519**

05/05/2011

230 V - 50 Hz | **schuko**

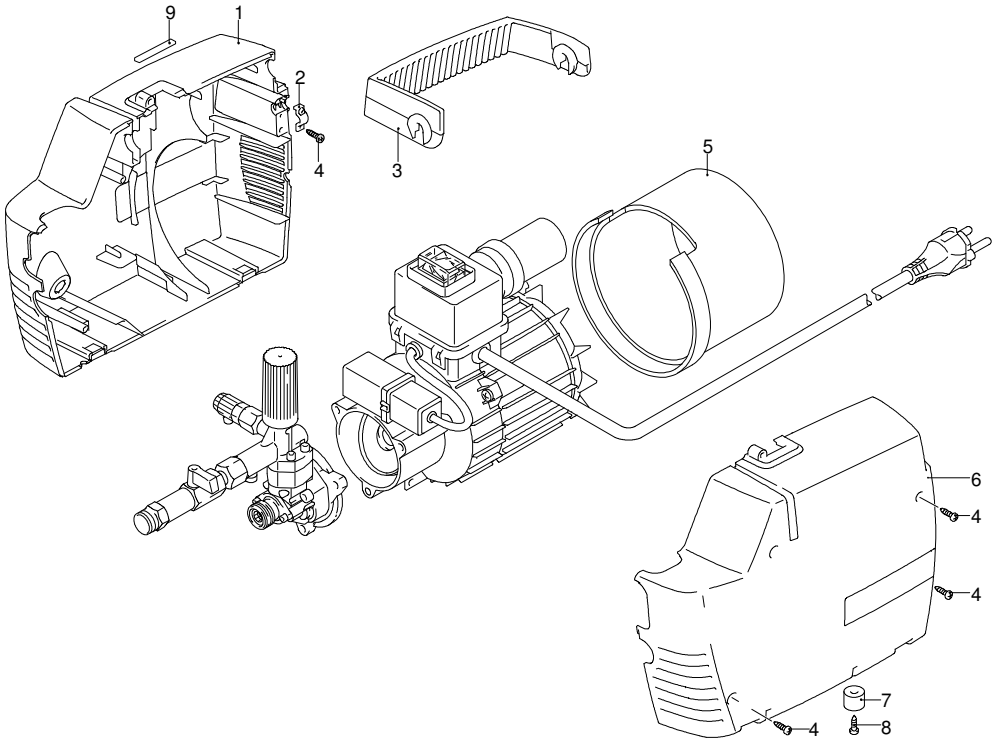

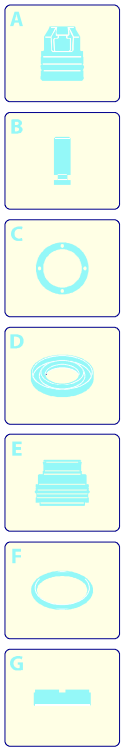

Validity	Pos.	Code	Description	Q
	1	2100505	Green casing	1
	2	1263020	Clamp	1
	3	2100510	Handle	1
	4	2000110	Screw	4
	5	2100070	Conveyor	1
	6	2100495	Green casing	1
	7	2102010	Vibration damper	4
	8	2100300	Screw	4
	9	2102400	Gasket	1

UN_CE_0473-EW

ANNOVI REVERBERI
The Power of Experience

FRESH FOG

Version:
Serial number:
Code: **12519**

05/05/2011

230 V - 50 Hz | **schuko**

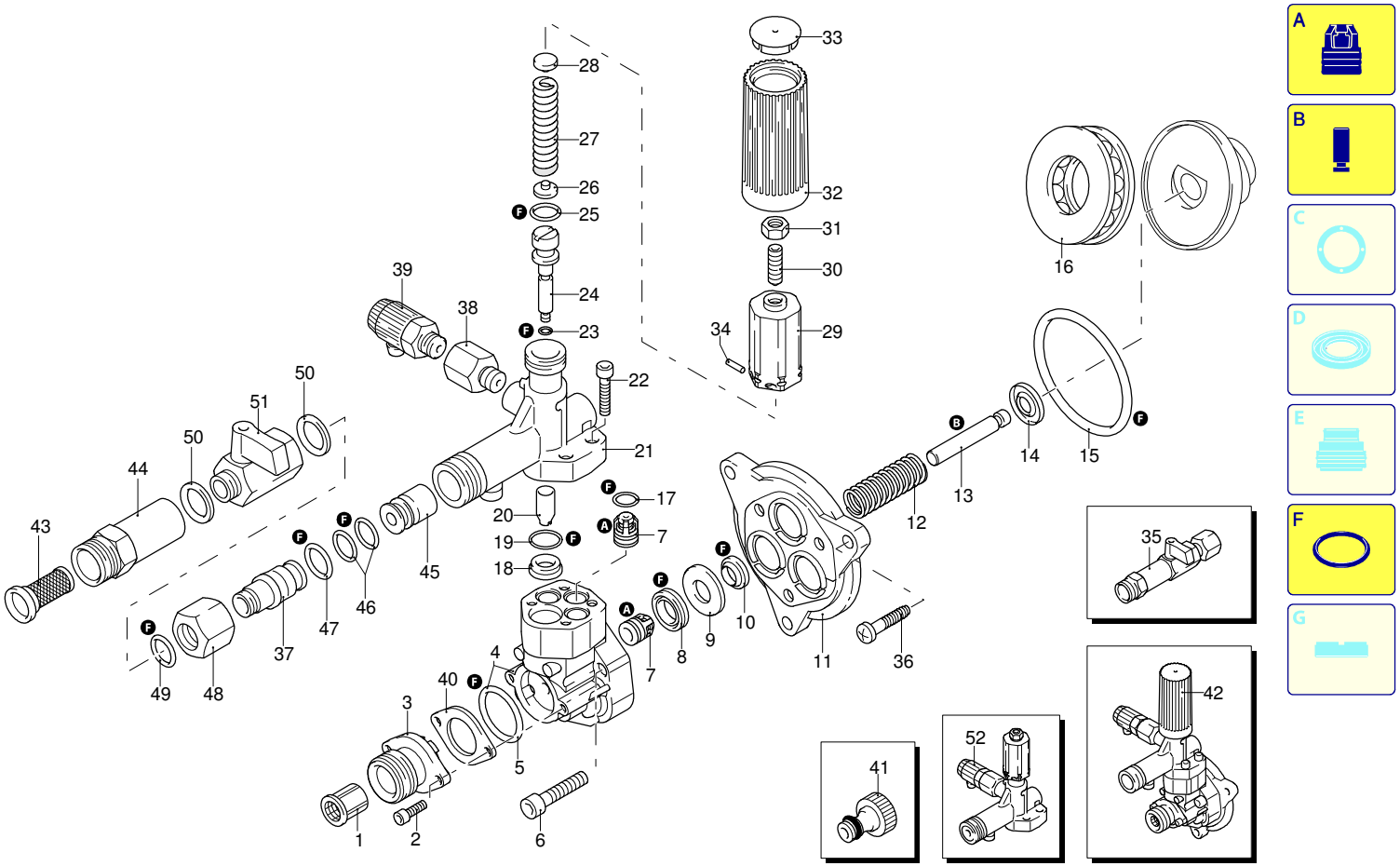

UN_CE_0475-EW

Validity	Pos.	Code	Description	Q
	1	1340260	Filter	1
	2	2101090	Screw	2
	3	2100540	Fitting	1
	4	2122	O-ring + head	1
	5	550350	O-ring	1
	6	850850	Screw	3
	7	2109052	Valve	6
	8	2200140	Water seal	3
	9	2020040	Ring	3
	10	1683500	Oil seal	3
	11	2100030	Piston guide	1
	12	2020150	Spring	3
	13	2100130	Piston	3
	14	2020140	Wobble plate	3
	15	850840	O-ring	1
	16	2021570	Bearing	1
	17	880840	O-ring	3
	18	2020481	Seat	1
	19	394280	O-ring	1
	20	1460150	Piston	1
	21	2021810	Fitting	1
	22	1260760	Screw	4
	23	1080190	O-ring	1
	24	2021900	Piston	1
	25	600180	O-ring	1
	26	1343450	Wobble plate	1
	27	1460191	Spring	1
	28	1343000	Wobble plate	1
	29	1980390	Insert	1
	30	1060120	Nut	1
	31	392840	Screw	1
	32	1981780	Knob	1
	33	1981770	Plug	1
	34	1080070	Pin	1
	35	2109280	Cock assembly	1
	36	2100960	Screw	3
	37	1123810	Fitting	1
	38	2022010	Fitting	1
	39	2100710	Valve	1
	40	2101450	Flange	1
	41	1461470	Fitting	1
	42	2109432	Pump assembly	1
	43	2102130	Filter	1
	44	2102140	Fitting	1
	45	2102090	Spacer	1
	46	800560	O-ring	1
	47	391000	O-ring	1
	48	2102100	Nut	1
	49	800560	O-ring	1
	50	2100890	Washer	1
	51	2100900	Valve	1
	52	2109283	Fitting assembly	1
	A	42327	Valve kit	1
	B	2508	Piston kit	1
	F	42315	Gasket kit	1

ANNOVI REVERBERI
The Power of Experience

FRESH FOG

Version:
Serial number:
Code: **12519**

05/05/2011

230 V - 50 Hz | **schuko**

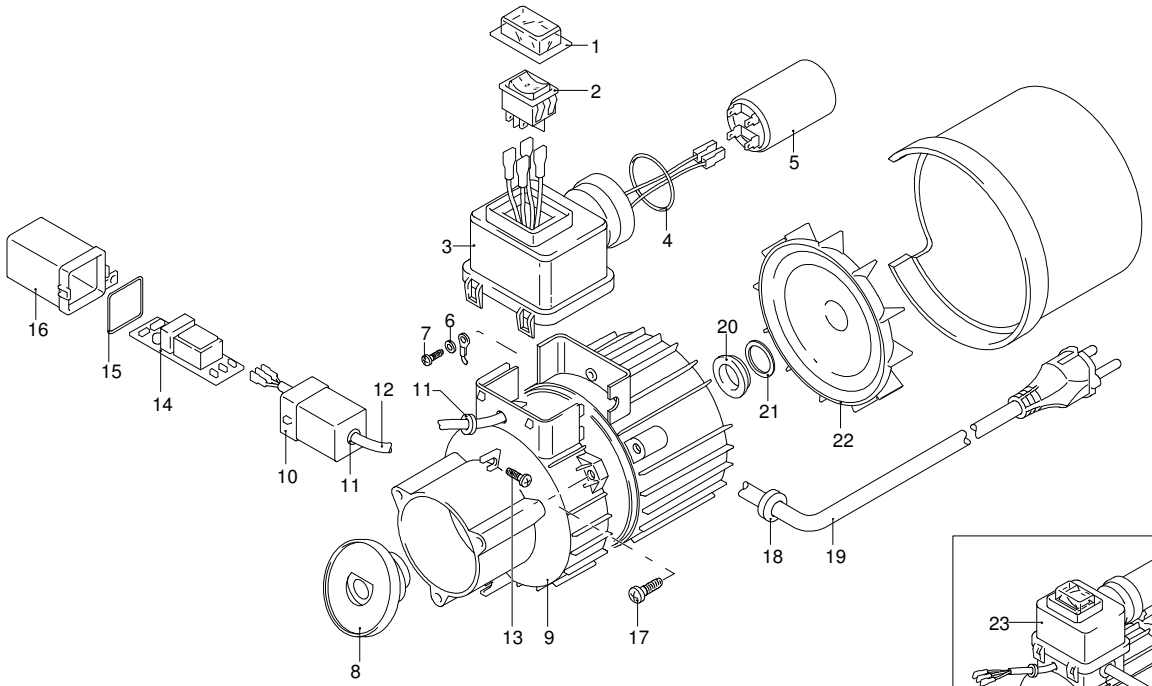

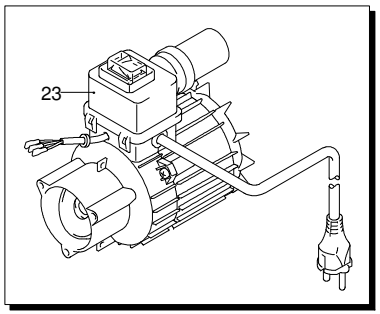

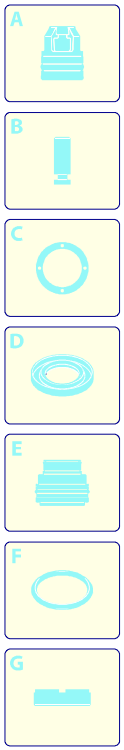

Validity	Pos.	Code	Description	Q
	1	2100280	Guard	1
	2	2102070	Switch	1
	3	2100060	Box	1
	4	390201	O-ring	1
	5	1683790	Capacitor	1
	6	1262400	Washer	1
	7	2020570	Screw	1
	8	2100620	Wobble plate	1
	9	2109204	Pump body assembly	1
	10	2102050	Box	1
	11	1462900	Gland	2
	12	2102020	Cable	1
	13	2100300	Screw	1
	14	2102030	Board	1
	15	1201760	O-ring	1
	16	2102060	Box	1
	17	2100980	Screw	3
	18	2100110	Gland	1
	19	2200090	Cable	1
	20	1340350	Oil seal	1
	21	2020850	Washer	1
	22	1680250	Fan	1
	23	44126	Motor	1

UN_CE_0474-EW

ANNOVI REVERBERI
The Power of Experience

FRESH FOG

Version:
Serial number:
Code: **12519**

05/05/2011

230 V - 50 Hz | **schuko**

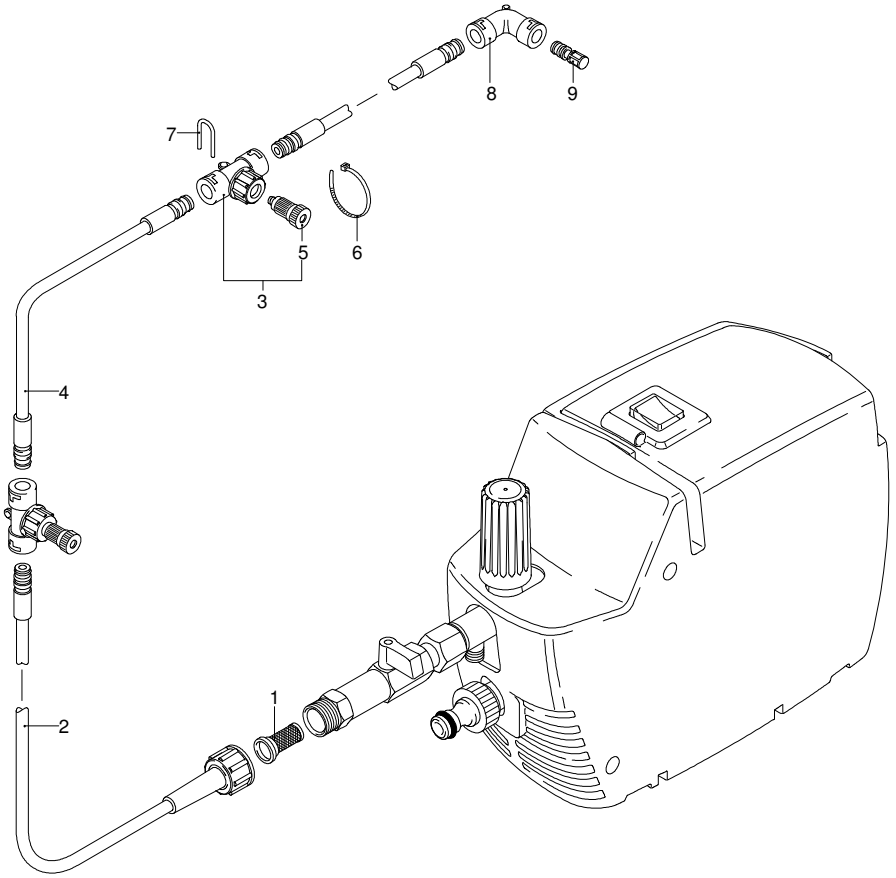

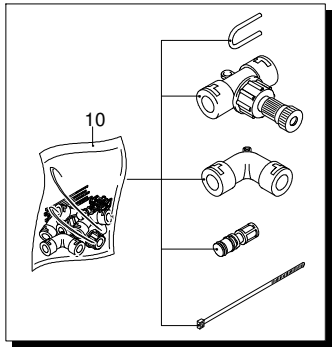

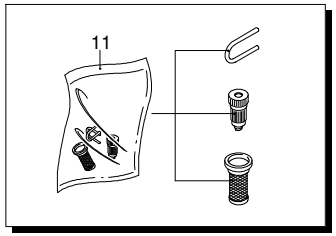

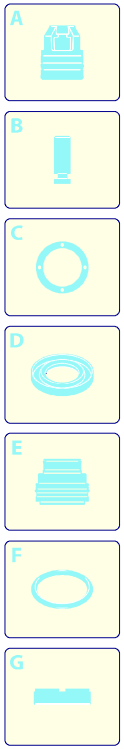

UN_CE_0472-EW

Validity	Pos.	Code	Description	Q
	1	2102130	Filter	1
	2	2102120	High pressure hose	1
	3	40804	Nozzle	10
	4	2101980	High pressure hose	10
	5	2102340	Nozzle	5
	6	1201390	Clamp	15
	7	2000080	Fork	22
	8	2101950	Fitting	2
	9	2101970	Plug	2
	10	42339	Accessories kit	1
	11	42091	Spare parts kit	1