CB50
Cutting ball 50
Cutting ball



420.050A
420.050AN
420.050B
420.050BN
420.050BS
420.050BSN
420.050C
420.050CS

Operating instructions
English
March 25| Version 1.3

Table of contents

Preface **3**

Purpose of the document **3**

1 ⚠ Safety **4**

1.1 ⚠ Consequences when disregarding the safety instructions 4
1.2 ⚠ Target group 4
1.3 ⚠ Requirements on the user 4
1.4 ⚠ Meaning of the general safety instructions 5
1.5 ⚠ Definition of risks in the operating instructions 5
1.6 ⚠ Intended use 6
1.7 ⚠ Safety instructions for modifications 6
1.8 ⚠ Protective equipment when working in shafts, pits and channels 7
1.9 ⚠ General safety instructions 9

2 Rights **11**

2.1 Copyright 11
2.2 Disclaimer 11
2.3 Guarantee conditions 11

3 Environment **12**

3.1 Disposal 12
3.2 Environmental protection 12

4 Technical data **12**

4.1 Introduction 12
4.2 Area of application 12
4.3 Legend for the specifications 12
4.4 Specifications 13
4.5 Description of CB50 15

5 Installation **16**

5.1 Assembly of the tools 16
5.2 Setting up the workplace 16

6 Operation **17**

6.1 Operating the cutting ball 17

7 Maintenance **18**

7.1 Changing the nozzle inserts 18
7.2 Care 19

8 Accessories/spare parts **20**

8.1 Spare parts CB50 20
8.2 Accessories 21

9 Directory **22**

9.1 Tables 22
9.2 Figures 22
9.3 Drawings 22

10 Notes **22**

 ©2025 enz® technik ag

Version	Revision	Date	Signature
1.0	created	January 21	fkr
1.1	revised	February 21	rri
1.2	420.050AS + 420.050ASN removed	May 21	rri
1.3	Change of QR-Code	March 2025	lgo

©2025 enz® technik ag

Preface

Dear customer
Thank you for the trust you have placed in us by the choice of our product.
We would be more than pleased to receive any improvement suggestions and any constructive suggestions. We consider your cooperation as contribution to the optimum execution of our product and the corresponding documentation.

If you have any questions or suggestions, please contact our customer services directly:

enz® technik ag
Schwerzbachstrasse 10
CH-6074 Giswil / Switzerland

Tel. +41 41 676 77 66
Fax. +41 41 676 77 67
info@enz.com
www.enz.com

Person responsible for the documentation:
Fabian Krasniqi (Tech. Support / Head of QM)

Changes and enhancements due to technical progress as well as print errors are reserved.

Purpose of the document

These operating instructions serve to use our product in a comprehensive sense according to its intended use, correctly, effectively and safely. The users are informed about the risks, reasonably foreseeable misuse and residual risks.



Important!
Before using the product for the first time, read these original operating instructions, handle accordingly and keep them in a safe place for future reference.

Carefully read through the operating instructions before working with the cleaning tool. Make sure that it has been understood by all persons working with the product.

The operating instructions should be made available to the operating personnel at all times. It must be stored at an easily accessible location.
If the operating instructions are lost or have been destroyed, a copy can be requested from your local dealer or direct from the manufacturer.

 ©2025 enz® technik ag

1 ⚠ Safety

1.1 ⚠ Consequences when disregarding the safety instructions

Disregarding the safety instructions may lead to accidents with serious personal injury, property or environmental damage.
The manufacturer is not liable for damage that results from disregarding the safety instructions.

1.2 ⚠ Target group

These operating instructions are intended for all persons that are involved in assembly, commissioning and operation of the pipe cleaning tool.

1.3 ⚠ Requirements on the user

All persons that are involved in the assembly, commissioning
and operation of the tool must ...

- be familiar with the cleaning work environment and have professional knowledge;
- be trained and instructed accordingly for the use of the product;
- have read and understood the operating instructions, in particular the chapter **“Safety”**.

If the personnel do not have the necessary knowledge, this must be trained and instructed. If necessary, this can be carried out by the manufacturer of the pipe cleaning tool.

Only the maintenance and repair activities described in these operating instructions may be carried out by users who fulfil the requirements specified. All other maintenance and repair work may only be carried out by qualified personnel of the manufacturer.



Observe the instructions in the chapter “MAINTENANCE”!

©2025 enz® technik ag

1.4 ⚠ Meaning of the general safety instructions

The general safety instructions in this chapter inform you about potential residual risks which, despite correct use of the product, may be permanently present or occur unexpectedly.
To avoid personal injury, property or environmental damage, it is essential that all persons working with the product observe the safety instructions. For these persons, it is therefore mandatory that this chapter is read and understood.

1.5 ⚠ Definition of risks in the operating instructions



DANGER!

Designates dangers which, if disregarded, will result in **death** or severe injuries!



WARNING!

Designates dangers which, if disregarded, may result in **death**, severe injuries and / or invalidity!



CAUTION!

Designates dangers which, if disregarded, may result in injuries and significant property, financial or environmental damage!



Information for the technically correct and efficient use of the product.

©2025 enz® technik ag

1.6 ⚠ Intended use

Due to the high pressures and temperatures, there is a risk of property damage as well as a risk of injury for the user and other persons. For the correct and intended use of the product, the following points must be observed:

- The pipe cleaning tool may be used exclusively in pipes or pipe-like channels. In doing so, the profile to be cleaned must be closed and surrounded by material.
- The tool is suitable for operation in PE, steel and concrete pipes. Consult the manufacturer for use in pipes made of other materials.
- The product may only be operated with correct hose connections free of faults.
- During operation including setup and clearing work, the cleaning area (shaft, feed, etc.) must be sufficiently secured.
- During operation, **no** persons may remain in the pipes or at the ends of the pipes.
- The max. pressure specified on the nozzle may **not** be exceeded.
- The dirty water may **not** be directed into streams or rivers.
- Before putting into operation each time, the correct state of the product must be checked.
- Defects must be rectified before putting into operation.
- Always use suitable tools.
- Secure hose lines in such a way that they cannot be damaged during operation.
- Only accessory parts provided and approved by ***enz® technik ag*** may be used.

1.7 ⚠ Safety instructions for modifications

It is forbidden to carry out any conversions or modifications to the pipe cleaning tool. Only original parts from the manufacturer may be used. The manufacturer is not liable for damage that results in conjunction with conversions to the product made at your own authority.

 ©2025 enz® technik ag

1.8 ⚠ Protective equipment when working in shafts, pits and channels

The employer provides suitable protective equipment. They must ensure that their employees wear these during work.
The protective equipment prescribed by the SUVA (Switzerland) are described in the following.

See the leaflet for this purpose:
Safe access and working in shafts, pits and channels

Order number: 44062.d

Suva
Schweizerische Unfallversicherungsanstalt
Occupational safety
Postfach, 6002 Luzern, Switzerland
Information:
Tel. 041 419 51 11
Orders:
www.suva.ch/waswo
Fax 041 419 59 17
Tel. 041 419 58 51



Isolation devices

Isolation device (breathing apparatus) for remaining in dangerous atmospheres and for rescue operations.



Isolation devices

Isolation devices for self-rescue (self-contained open-circuit compressed air breathing apparatus and regenerative devices) for remaining in channels and for first supply of persons injured



Rescue harness

Rescue harness or safety clothing with sewn-in neck eyelet. During the rescue operation, the rescue rope is attached to the neck eyelet. Lifting the injured person is carried out, e.g. By means of a rescue lifting device with automatic load backstop.



Suitable work clothing

Closed work clothing protects against contamination of skin and possible infections. Visually noticeable work clothing should make the employees more visible for road users.

©2025 enz® technik ag



Suitable shoes

The safety shoes should, in particular, offer good support as well as be anti-slip and leak proof (e.g. Rubber boots).



Gloves

Suitable gloves protect against hand injuries and contact against substances hazardous to health and contaminated water.



Hard hat

The hat protects the persons head against falling objects as well as against knocking against fixed components and objects.



Ear protection

For noise which can damage hearing, e.g. ear protector capsules with integrated headset can be worn.



Eye protection

If there is a danger from splitters, splashing of hazardous substances, etc. eyes must be protected.



Network-independent lighting

For example, a splash-proof torch or a lamp fixed to a hard hat must be carried.

©2025 enz® technik ag

1.9 ⚠ General safety instructions



Danger! | High-pressure water jets

Defective or incorrect operation of the product may generate dangers from splash water under pressure. Before operation, ensure the trouble-free state of the product. Powerful water jets may cause serious injuries or even sever limbs. Non-observance of the safety instructions may result in **death** or very serious injuries!



Danger! | Poisonous vapours

Channels may contain poisonous vapours. Wear the prescribed protective equipment such as gas masks, gas alarms and rescue harnesses. Inhaling poisonous vapours or air contaminated with particles may result in **death** or very serious injuries from the particles penetrating into the lungs!



Warning! | Parts falling down

In the area of open shafts, objects may fall into the shaft on top of persons working there. When inserting the product, never remain directly under the shaft opening. Secure the shaft access against parts that may fall down. Do not throw any tools or objects into the shaft. Never access shafts that are in danger of collapsing. Persons could be buried. Non-observance of safety instructions may result in **death** or very serious injuries!



Warning! | Chemical burns

Channels may contain unknown, corrosive or other harmful substances. Wear the respective protective clothing.. Use the prescribed protective equipment. Chemical burns to skin and eyes as well as infections with pathogens may be the consequence.

©2025 enz® technik ag



Warning! | Risk of falling

In the area where work is carried out using the product, open shafts are to be expected. Open shafts must be indicated. Take care where you step. Persons falling may result in **death** or very serious injuries!



Warning! | Hand injuries

With a modification of the product, there is a risk of hand injuries from entrapment or abrasion. Wear gloves when working. Observe where you hold the product. Carry heavy devices with the assistance of a second person. This may result in crushing, abrasion up to the severing of limbs.



Caution! | Tipped objects

With a modification of the product, there is a risk of hand injuries from sharp edges. Wear gloves when working. Observe where you hold the product. This may result in cut injuries to hands and other body parts.



Caution! | Risk of falling

In the area where work is carried out with the product, lines and objects are to be expected on the ground. Take care where you step. Keep the operating area clean and tidy. Falling caused by tripping may result in injury.

©2025 enz® technik ag

2 Rights

2.1 Copyright

This manual may not be partially or completely copied, photocopied, reproduced, translated or converted in an electronically of machine-readable form without the prior written consent of **enz® technik ag**.

©2025 enz® technik ag, CH-6074 Giswil.
All rights reserved.

2.2 Disclaimer

The manufacturer is not liable for damage that:

- has resulted in conjunction with modifications to the product carried out at your own authority.
- have resulted from disregarding the safety instructions.

2.3 Guarantee conditions

In line with our terms of sales and delivery, we issue a guarantee. However, the guarantee is omitted:

- When used under conditions stipulated otherwise by us.
- When using replacement or accessory parts that are not original from **enz® technik ag**.
- In event of damage caused by:
  - Incorrect handling
  - Non-observance of the operating instructions
  - Unsuitable operating material
  - Routing of the hose or pipelines incorrectly or inappropriately
  - Changes, modifications or conversions to the product at your own authority.

3 Environment

3.1 Disposal

Old devices have valuable recyclable materials that should be recycled. Thus, please dispose of the old device via appropriate collecting points.

3.2 Environmental protection

Please observe that surfaces can only be cleaned where the composition is known. Chemicals or other poisonous substances must never be released to the environment. Take care to avoid excessive use of water. In this way, you help to protect natural resources.

4 Technical data

4.1 Introduction

The enz® CB50 is a rotating cutting ball which works without impact. The blades of the cutting ball on the side are self-sharpening and keep their sharpness over their entire service life. Moreover, the cutting ball is equipped with a carbide front cutting plate which is used for heavily clogged pipes. The cutting ball has a diverse area of application. Thanks to its ball shape, it can navigate pipe bends and does not damage the pipe.

4.2 Area of application

The enz® CB50 is particularly suitable for the removal of:

- roots
- mineral deposits
- calcareous layers

4.3 Legend for the specifications

	Connecting thread [“]		Rotating nozzles / bore
	Front jet		Thrust jet
	Weight		Area of application
	Mass		min. flow rate at 100 bar
	Maximum pressure		

Table 1: Legend for the specifications

 ©2025 enz® technik ag

4.4 Specifications

4.4.1 420.050Ax

Order no.		420.050A	420.050AN
		BSPP 1/4"	1/4" NPT
		4x M6	
		-	
		-	
	kg	0.43	
	lbs	0.95	
	mm	60-100	
	Inch	2.2-4.0	
ØxL	mm	49 x 62	
	Inch	1.9 x 2.4	
	l/min	25	
	US gpm	6.6	
max	bar	200	
	psi	2,900	

Table 2: Specifications 420.050Ax

4.4.2 420.050Bxx

Order no.		420,050B	420.050BN	420.050BS	420.050BSN
		BSPP 3/8"	3/8" NPT	BSPP 3/8"	3/8" NPT
		4x M6			
		-			
		-		4xØ1.3 mm	
	kg	0.43			
	lbs	0.95			
	mm	60-100			
	Inch	2.2-4.0			
ØxL	mm	49 x 62			
	Inch	1.9 x 2.4			
	l/min	25		55	
	US gpm	6.6		14.5	
max	bar	200			
	psi	2,900			

Table 3: Specifications 420.050Bxx

©2025 enz® technik ag

4.4.3 420.050Cx

Order no.		420.050C	420.050CS
		BSPP 1/2"	
		4x M6	
		-	
		-	4xØ1.3 mm
	kg	0.4	
	lbs	0.88	
	mm	60-100	
	Inch	2.2-4.0	
	mm	49 x 58	
	Inch	1.9 x 2.3	
	l/min	25	55
	US gpm	6.6	14.5
	bar	200	
	psi	2,900	

Table 4: Specifications 420.050Cx

©2025 enz® technik ag

4.5 Description of CB50

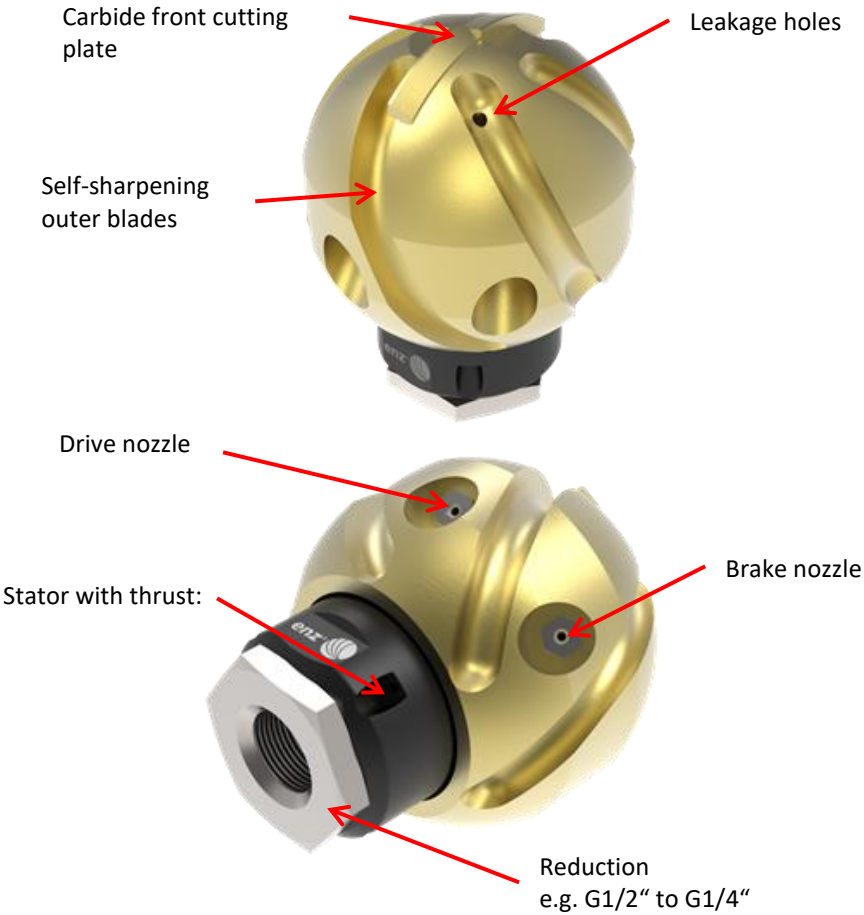

Figure 1: Description of the CB50

©2025 enz® technik ag

5 Installation

5.1 Assembly of the tools

The cutting ball is delivered ready for operation. After unpacking, check that the delivery is complete.

The cutting ball is screwed onto the hose of the vehicle. The thread dimensions depends on the article number of the cutting ball and is apparent in chapter “Technical data” on page 11.

In normal cases, during use the cutting ball rotates counter-clockwise, which prevents it from unscrewing from the hose during operation.

5.2 Setting up the workplace

Before working with the cutting ball, the following measures must be taken:

⚠ Install any barriers and protective equipment (Triopan warning sign, fencing ropes, etc.).

⚠ Obtain the necessary information about the waste water introduced to the shaft (chemical substances, gases, vapours, etc.).

⚠ The necessary measuring devices such as explosimeter, oxygen meter, gas alarm, etc. must be ready for use.

⚠ The working area must be cordoned off such that there is no risk of falling and no danger from road traffic.

⚠ Make sure that the suitable nozzles are present for the pipe cleaning. The area of application of each nozzle is apparent in subsection “Technical data” on page 15.

⚠ The pipe run (plans) must be known before starting work in order to prevent the nozzle from exiting at the end of the line. Possible exit location must be monitored by support staff.

⚠ Have the exclusion of liability signed in order to protect against any possible damage.

 ©2025 enz® technik ag

6 Operation

6.1 Operating the cutting ball

The cutting ball is suitable for cleaning the following pipe types:

- PE pipes
- Steel pipes
- Concrete pipes

In order to ensure the intended operation of the cutting ball, the following steps must be observed.

1. Push the entire length of the cutting ball into the pipe to be cleaned.
2. Run the cutting ball up to the deposits with 700 to 1000 psi (50 to 70 bar).
3. At the application, increase the pressure to 1450 psi (100 bar).
4. Measure the length of the pipe to be cleaned (marking on the hose) and check this during cleaning.
5. Pull the cutting ball back at regular intervals in order to prevent blockages.



WARNING!

The cutting ball can turn in pipes with larger diameters. Use a safety pipe. This can result in severe injuries.



WARNING!

The cutting ball may only be operated in closed pipes surrounded by material. This can result in severe injuries.



CAUTION!

Maximum operating pressure at the nozzle 200 bar (2,900 psi)



CAUTION!

Take great care when working in a slightly damaged pipe. By washing out the cracks, pipe fragments may break away and the area around the pipe flushed out.

©2025 enz® technik ag

CAUTION!

Never allow the cutting ball to jump, this may damage the pipe and the cutting ball.

If possible, during work, at certain intervals check the pipe to be cleaned for damage using a camera.

7 Maintenance

7.1 Changing the nozzle inserts

The nozzle inserts should be checked at regular intervals. The wear depends on the degree of contamination of the water used. Worn nozzle inserts significantly impair the cleaning effect.

Follow the next steps to change the nozzle inserts.

1. Use a gas torch (Art. No C158) to heat the nozzle insert and then disassemble the nozzle insert.



Work only using the matching tool.

2. Thoroughly clean the thread on the cutting ball using acetone.



 ©2025 enz® technik ag

3. Coat the new nozzle insert the thread on the cutting ball with Loctite 243 (Art. no. C192).

The remaining adhesive may not clog the nozzle insert.

4. Mount the nozzle insert. Ensure that the nozzle insert is only tightened hand-tight.



Figure 2: Changing the nozzle insert

CAUTION!

Damaged nozzle inserts may only be replaced with identical nozzle inserts with the same diameter. If you do not know the nozzle diameter, JetCalc must be used to determine this. If the cutting ball is not equipped correctly, this will led to damage on the cutting ball and to the pipe.

CAUTION!

The offset from the middle is 0.24“ (6 mm) with the brake nozzle and 0.31“ (8 mm) with the drive nozzle. The cutting ball will no longer function if these are swapped. You can find help in figure 1.

7.2 Care

To ensure a high service life of the cutting ball, the cutting ball must be provided with the correct care. For this purpose, after use, preserve the cutting ball with the Oil Spray Bio (Art. no. C191). Also take care that after use, dirt is removed from the nozzle inserts.

©2025 enz® technik ag

8 Accessories/spare parts

8.1 Spare parts CB50

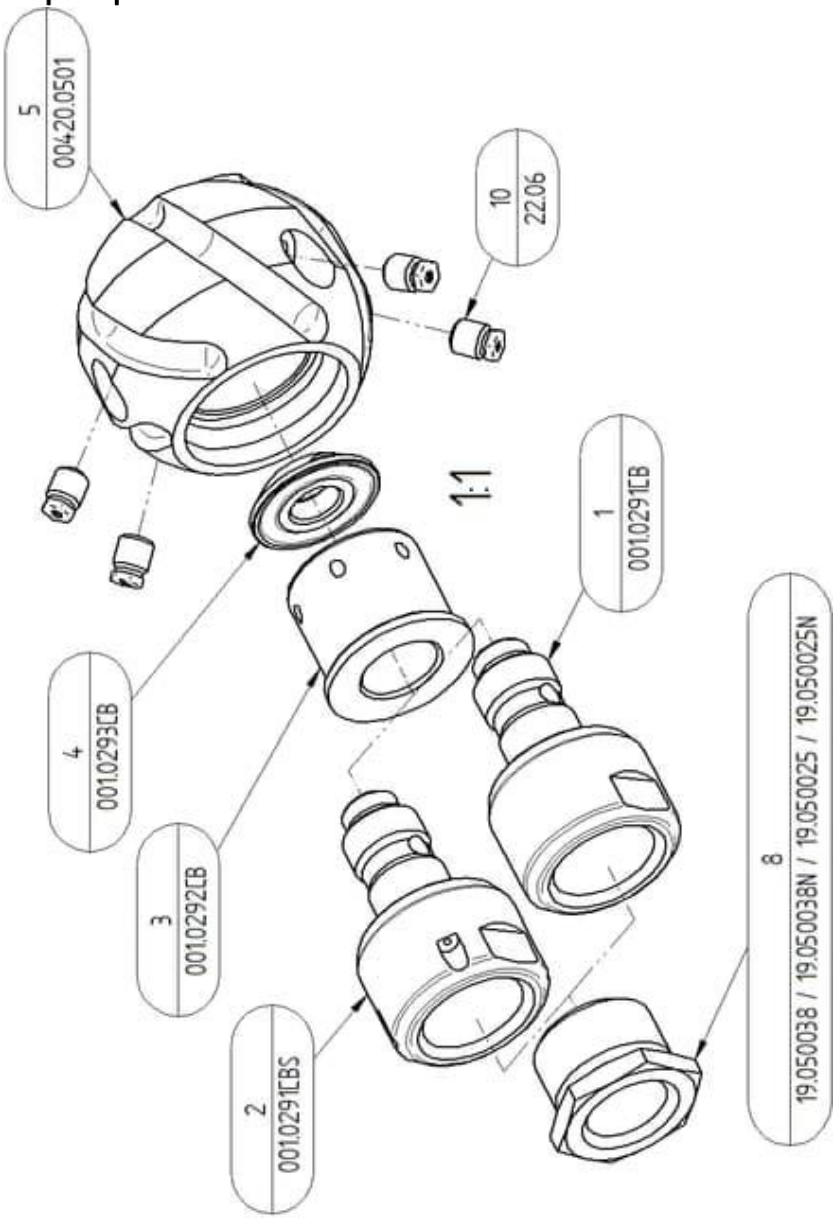

Drawing 1: Explosion CB50 420.050x

8.2 Accessories

Figure	Article number	Designation
	22.06	Nozzle inserts Ø 0.3-3.0 mm
	C101	Socket spanner 5 mm
	C149	Socket spanner 5 mm
	C191	Oil Spray Bio 500 ml
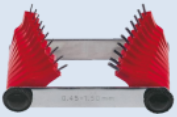	C200	Nozzle gauge with 20 pins Ø 0.45-1.50 mm
	C201	Nozzle gauge with 16 pins Ø 1.50-3.00 mm
	C192	Loctite 243 50 ml
	C202	enz® nozzle cleaning kit
	C158	Gas burner

Table 5: Accessories CB50

©2025 enz® technik ag

9 Directory

9.1 Tables

Table 1: Legend for the specifications *12*
Table 2: Specifications 420.050Ax *13*
Table 3: Specifications 420.050Bxx *13*
Table 4: Specifications 420.050Cx *14*
Table 5: Accessories CB50 ..... *21*

9.2 Figures

Figure 1: Description of the CB50 ..... *15*
Figure 2: Changing the nozzle insert *19*

9.3 Drawings

Drawing 1: Explosion CB50 420.050x *20*

10 Notes

 ©2025 enz® technik ag



enz® technik ag
Schwerzbachstrasse 10
CH-6074 Giswil / Switzerland
Tel. +41 41 676 77 66
Fax +41 41 676 77 67
info@enz.com
www.enz.com