Bulldog®

408.030



Operating Instructions
English
November 26 | Version 1.0

Contents

Contents **1**
Foreword **3**
Purpose of this document **3**
1 Safety **4**
1.1 Consequences of disregarding safety instructions 4
1.2 Intended audience 4
1.3 Operator requirements 4
1.4 Purpose of the general safety instructions 4
1.5 Types of notices used in these instructions 4
1.6 Intended use 5
1.7 Safety instructions for modifications 6
1.8 Protective equipment for work in manholes, pits and sewers 6
1.9 General safety instructions 8
2 Rights **10**
2.1 Copyright 10
2.2 Disclaimer 10
2.3 Warranty terms 10
3 Bulldog® **11**
3.1 Introduction 11
3.2 Applications 11
3.3 Operating principle 11
3.4 Bulldog 30 head configuration 12
3.4.1 Selecting the offset 12
4 Installation **13**
4.1 Fitting the tools 13
4.1.1 Nozzle configuration 13
4.2 Preparatory work 13
4.3 Setting up the work area 14
5 Operation **15**
5.1 Operating the tools 15
5.2 Cleaning slightly damaged pipes 16
5.3 After use 16
5.4 Final checks 17
5.5 Troubleshooting 17
5.5.1 Bulldog® rotary nozzle head does not turn 17
5.5.2 Bulldog® nozzle head turns slowly or not at all 17
6 Maintenance **18**

 ©2026 enz® technik ag

6.1 Nozzle inserts 18
6.1.1 Replacing nozzle inserts 18
6.2 Disposal and environmental protection 18
7 Technical data 20
8 Accessories 21
9 Index 22
9.1 Figures 22

Version	Revision	Date	Initials
1.0	Created	September 2026	lgo

©2026 enz® technik ag

Foreword

Dear Customer,
Thank you for choosing our product and for the trust you have placed in us.
We welcome all suggestions for improvement and constructive feedback. Your input helps us improve our product and its documentation.

For questions or suggestions, please contact our customer service team directly:

enz® technik ag
Tel. +41 41 676 77 66
info@enz.com

Feedbackformular
www.enz.com/de/header/feedback

Person responsible for documentation:
Luca Gottenkieny (Technical Support / Head of Quality Management)

Subject to changes and further development due to technical advances. Printing errors excepted.

Purpose of this document

These operating instructions explain how to use our product as intended, correctly, effectively and safely. They inform users about risks, reasonably foreseeable misuse and residual risks.



Important!
Read carefully before use.
Keep for future reference.

Read these operating instructions carefully before working with the cleaning tool. Make sure everyone working with the product understands them.

Keep the operating instructions readily accessible to operators at all times.
If the operating instructions are lost or destroyed, you can obtain a copy from your nearest dealer or download one from the manufacturer’s website.

©2026 enz® technik ag

1 Safety

1.1 Consequences of disregarding safety instructions

Failure to follow the safety instructions can lead to accidents resulting in serious personal injury, property damage or environmental harm.
The manufacturer is not liable for damage resulting from failure to follow the safety instructions.

1.2 Intended audience

These operating instructions are intended for anyone who assembles, commissions or operates the pipe cleaning tool.

1.3 Operator requirements

Anyone who assembles, commissions or operates the tool must…

- be familiar with sewer maintenance work and have the necessary technical knowledge.
- have received appropriate training and instructions on how to use the product.
- have read and understood the operating instructions, particularly the "**Safety**" section.

If personnel lack the necessary knowledge, they must be trained and instructed. If necessary, the manufacturer of the pipe cleaning tool can provide this training.

Only users who meet the above requirements may carry out the maintenance and repair tasks described in these instructions. All other maintenance and repair work may only be performed by qualified specialists from the manufacturer.



Follow the instructions in the "**Maintenance**" section.

1.4 Purpose of the general safety instructions

The general safety instructions in this section describe residual hazards that are always present or may arise unexpectedly, even when the product is used as intended.
Everyone working with the product must follow these safety instructions to prevent injury, property damage and environmental harm. These persons must therefore read and understand this section.

1.5 Types of notices used in these instructions

©2026 enz® technik ag

	**DANGER!** Indicates hazards that will result in **death** or very serious injury if not avoided.
	**WARNING!** Indicates hazards that could result in serious injury and/or disability if not avoided.
	**CAUTION!** Indicates hazards that could result in injury and significant property, financial or environmental damage if not avoided.
	Information on correct and efficient use of the product.

1.6 Intended use

The product is intended for cleaning the inside of pipes (sewer cleaning). Observe the following points to use the tool correctly and as intended:

⚠ Use the cleaning tool only in pipes or pipe-like conduits. The cross-section being cleaned must be fully enclosed by solid material.

⚠ The tool can be used in the following types of pipe:

- Vitrified clay
- Ceramic
- Clay
- PVC
- PE pipes
- Eternit
- Steel pipes
- Concrete pipes

©2026 enz® technik ag

- ⚠ Consult the manufacturer before use in pipes made of other materials.
- ⚠ Operate the product only with the correct connections in good condition.
- ⚠ Secure cleaning areas (manholes, inlets, etc.) adequately during setup, operation and cleanup.
- ⚠ Make sure **no one** is inside the pipes or at their ends during operation.
- ⚠ Do **not** exceed the maximum pressure marked on the nozzle.
- ⚠ Do **not** discharge dirty water into streams or rivers.
- ⚠ Check that the product is in good condition before each use.
- ⚠ Rectify any defects before use.
- ⚠ Use only suitable tools in good condition. Use spanners of the correct size.
- ⚠ Secure hoses to protect them from damage during operation.
- ⚠ Use only accessories supplied and approved by ***enz® technik ag***.

1.7 Safety instructions for modifications

Any other modifications or alterations to the pipe cleaning tool are prohibited. Use only parts authorised by the manufacturer. The manufacturer is not liable for damage resulting from unauthorised modifications to the product.

1.8 Protective equipment for work in manholes, pits and sewers

The employer must provide suitable protective equipment and ensure that employees wear it while working.

The protective equipment required by Suva is described below.

See the following brochure:
Safe entry and work in manholes, pits and sewers

Order number: 44062.d

Suva
Swiss National Accident Insurance Fund
Occupational safety
P.O. Box, 6002 Lucerne
Enquiries:
Tel. 041 419 51 11
Orders:
www.suva.ch/waswo
Tel. 041 419 58 51



Self-contained breathing apparatus

Self-contained breathing apparatus for use in hazardous atmospheres and during rescue operations.



Self-contained breathing apparatus

Self-rescue breathing apparatus (compressed-air sets and rebreathers) for use in sewers and for providing initial assistance to casualties.



Rescue harness

Use a rescue harness or safety garment with a sewn-in attachment ring at the back of the neck. During a rescue, attach the rescue line to this ring. The casualty can be lifted, for example, using a rescue hoist fitted with a mechanism that automatically prevents the load from slipping back.



Suitable workwear

Workwear that covers the body protects the skin from contamination and possible infection. High-visibility workwear makes workers easier for road users to see.



Suitable footwear

Safety footwear should provide good support and be slip-resistant and waterproof, such as rubber boots.



Gloves

Suitable gloves protect against hand injuries and contact with hazardous substances and contaminated water.

©2026 enz® technik ag



Safety helmet

The helmet protects the head from falling objects and impacts against fixed structures and objects.



Hearing protection

Where noise levels can damage hearing, earmuffs with an integrated communications headset can be worn, for example.



Eye protection

Wear eye protection if there is a risk of flying fragments, splashes, hazardous substances or similar hazards.



Portable lighting

Carry a splash-resistant handheld light or a helmet-mounted light, for example.

1.9 General safety instructions



Danger! | High-pressure water jets

Defects or improper operation can expose you to pressurised spray. Never enter or remain in the sewer during operation. Before use, make sure the product is in perfect working order. Concentrated water jets can cause very serious injuries, including severed limbs.



Danger! | Toxic fumes

Toxic fumes can accumulate in sewers. Use the required protective equipment, such as respirators, gas detectors and rescue harnesses. Inhaling toxic fumes or air containing particles can cause **death** or very serious injury if particles enter the lungs.



Warning! | Falling objects

Objects can fall into open manholes and strike people below. Never stand directly beneath the opening when lowering the product. Protect the access opening against falling objects. Never throw tools or objects into the manhole. Do not enter manholes at risk of collapse. People could be buried.



Warning! | Chemical burns

Sewers may contain unknown, corrosive or otherwise harmful substances. Wear suitable protective clothing and use the required

©2026 enz® technik ag

protective equipment. Exposure may cause chemical burns to the skin or eyes and infections from pathogens.



Warning! | Falls into openings

There may be open manholes in the work area. Mark all open manholes and watch your step.



Warning! | Hand injuries

Handling the product may trap or scrape your hands. Wear gloves, take care where you grip the product and have two people carry heavy equipment. Injuries can range from crushing and abrasions to severed limbs.



Caution! | Sharp objects

Sharp edges may injure your hands when handling the product. Wear gloves and take care where you grip the product. Sharp edges may cut your hands or other parts of your body.



Caution! | Trips and falls

Hoses and other objects may be on the ground in the work area. Watch your step and keep the work area tidy. Tripping and falling may cause injury.

©2026 enz® technik ag

2 Rights

2.1 Copyright

Without prior written permission from **enz® technik ag**, no part of this manual may be copied, photocopied, reproduced, translated or converted into electronic or machine-readable form.

©2026 enz® technik ag, CH-6074 Giswil.
All rights reserved.

2.2 Disclaimer

The manufacturer is not liable for damage resulting from:

- unauthorised modifications to the product.
- failure to follow the safety instructions.

2.3 Warranty terms

We provide a warranty under our terms of sale and delivery. The warranty is void in the following cases:

- Use under conditions other than those we permit.
- Use of spare parts or accessories other than genuine parts from **enz® technik ag**.
- Damage caused by:
    - Improper handling
    - Failure to follow the operating instructions
    - Unsuitable operating supplies
    - Incorrect or improper routing of hoses or pipes
    - Unauthorised changes, modifications or alterations to the product.

3 Bulldog®

3.1 Introduction

The enz® Bulldog® rotary nozzle is designed to run on fresh or recycled water. Its sealed bearing system allows it to operate with varying water quality. The built-in magnetic brake limits rotor head speed without wear and keeps rotation steady and controlled. This provides efficient and economical cleaning.

3.2 Applications

Bulldog® nozzles are designed to remove grease, roots and harder deposits. They are particularly suited to cleaning the entire pipe circumference, for example before a CCTV inspection.

3.3 Operating principle

During operation, the head of the Bulldog® rotary nozzle turns clockwise when viewed from the front.

The water jets are offset from the centre axis of the rotor head. This offset (a.) generates torque that turns the head.

At the same time, the rear-facing jets provide thrust, pulling the nozzle and jetting hose through the pipe.

As speed rises, the magnetic brake built into the nozzle body exerts more braking force. This limits rotor head speed and keeps it as steady as possible within the specified operating range.

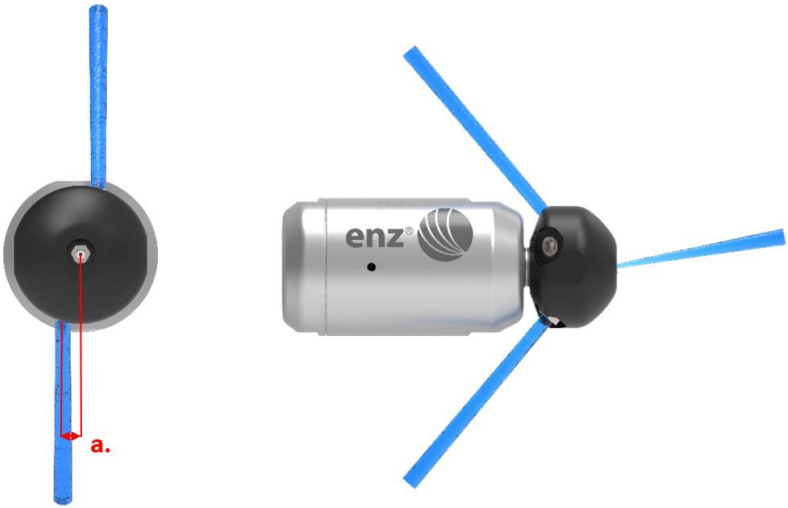

Figure 1 ***Operating principle of the Bulldog® 30***

©2026 enz® technik ag

3.4 Bulldog 30 head configuration

The Bulldog® 30 has two rear-facing water jets and an optional front jet.
To ensure reliable operation at different pressures and flow rates, four offsets are available to drive rotation:

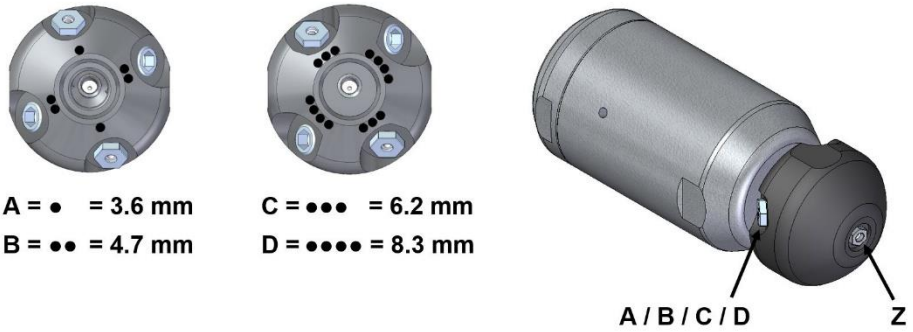

Figure 2 ***Bulldog 30 head offsets***

Because of its compact design, each Bulldog 30 head can accommodate only twoof the four offsets. Two different heads are therefore available:

- Large-offset head: Part No. 00100.030102
- Small-offset head: Part No. 00100.030103

The dots on the rotor head identify the offsets as shown in **Figure 2.**

CAUTION!

Fit the Bulldog® 30 head with no more than two drive jets and one front jet. The two unused drive ports must always be sealed with blanking plugs (Part No. 617.0606). Failure to do so may damage or destroy the nozzle.

3.4.1 Selecting the offset

Select the offset according to the available flow rate:

- Low flow rate → large offset
- High flow rate → small offset

The right offset keeps the torque generated by the water jets as steady as possible throughout the specified operating range. This ensures smooth rotation and prevents overloading

©2026 enz® technik ag

the built-in eddy current brake.
Select the rotor head and nozzle inserts to suit the available flow rate.
To reconfigure the nozzle, see **section 6.1 on page 18.**

4 Installation

4.1 Fitting the tools

The tools are supplied ready for use. After unpacking, check that the delivery is complete.

4.1.1 Nozzle configuration

Before shipment, each Bulldog® rotary nozzle is configured for the specific jetting truck. For every order, enz® technik ag requires the following parameters:

- Pump flow rate: l/min US gpm
- Pump pressure: bar psi
- Hose size: mm inch
- Hose length: m feet
- Hose material: Plastic Rubber



If the jetting truck parameters change, check the Bulldog® nozzle configuration. See **section 6.1** on **page 18**.

4.2 Preparatory work

Check the following points before starting work. This information helps you prepare the job and select the tools:

- Pipe layout
- Inside diameter of the pipe to be cleaned
- Material of the pipe to be cleaned
- Type of contamination in the pipe
- Intended jetting direction → Working against the direction of flow is recommended.
- Any slope of the pipe to be cleaned
- Access to the sewer

©2026 enz® technik ag

4.3 Setting up the work area

Take the following precautions before working with a Bulldog® rotary nozzle:

- Set up barriers and protective equipment (folding signs, barrier ropes, etc.).
- Cordon off the work area to eliminate the risk of falls and hazards from road traffic.
- Obtain the necessary information about the wastewater discharged into the manhole (chemicals, gases, vapours, etc.).
- Have all required instruments ready for use, such as a combustible gas meter, an oxygen meter and a gas detector.
- Make sure suitable nozzles are available for cleaning the pipe. The nozzle's range of application is given in the technical data starting on **page 20**.
- Know the pipe layout (manhole plan) before starting work so that the nozzle cannot exit at the end of the line. Assign assistants to monitor any potential exit points.



Figure 3 ***Work area with barriers and warning signs***

 ©2026 enz® technik ag

5 Operation

5.1 Operating the tools

1. Before starting work, use a standard nozzle to flush all loose stones out of the pipe. Loose stones can obstruct the work.
2. Screw the Bulldog® nozzle onto the jetting truck hose.
3. Insert the nozzle into the pipe to be cleaned. Work against the direction of flow where possible.
4. Increase the pressure at the nozzle to 100 bar. Take the pressure loss in the hose into account.
5. Watch the nozzle advance as you pay out the hose. Feed and retrieve it at 10–20 metres per minute. Listen to the nozzle as it operates. If you notice anything unusual, follow the troubleshooting instructions in **section 5.5** starting on **page 17**.
6. Keep the water running while withdrawing the nozzle to prevent dirty water from entering the nozzle.
7. Replace all manhole covers when the work is complete.

During operation, the nozzle rotates clockwise. Turn it anticlockwise to unscrew it from the connection thread. This ensures that the nozzle does not unscrew during operation.



DANGER!

Never exceed the maximum working pressure. This can be fatal! See the technical data starting on **page 20**. If a nozzle bursts, it can break through pipe walls and eject parts at high speed.



DANGER!

The tool can turn around in larger pipes. Use a safety tube to prevent death or very serious injury.



Always monitor cleaning with a camera.

©2026 enz® technik ag

In heavily soiled pipes, periodically pull the tool back to prevent blockages from forming behind it.

Keep the water running at low pressure while withdrawing the tool. This prevents dirty water from entering the tool through the nozzle inserts and causing the Bulldog® rotary nozzle to fail.

5.2 Cleaning slightly damaged pipes

Slightly damaged pipes generally have cracks in the pipe wall. Always report any such findings to the customer or the relevant authority.

Use extreme caution when working in slightly damaged pipes. Use is always at your own risk. enz® technik ag accepts no liability.

CAUTION!

Flushing cracks can dislodge pipe fragments and wash away the surrounding material. If in doubt, do not use the rotary nozzle. The sewer could collapse and cause injuries.

CAUTION!

Excessive pressure can damage or perforate the pipe wall, interrupting work and causing property damage.

5.3 After use



Figure 4 ***Oil Spray Bio, 500 ml***

1. Check the nozzle inserts for blockages. This is easiest while the tool is still connected to the hose. Check that water comes out of every insert.
2. Rinse the tool with fresh water and let it dry. Do not blow out the nozzle inserts with compressed air!
3. Check the components for signs of wear and replace any defective parts.
4. Spray OIL SPRAY BIO (Part No. C191) over the entire tool. Then turn the rotor several times by hand.

©2026 enz® technik ag

5.4 Final checks

Where possible, inspect the cleaned pipes with a camera. Pay particular attention to damage and any liquids leaking into the environment.

5.5 Troubleshooting

5.5.1 Bulldog® rotary nozzle head does not turn

A Bulldog® nozzle makes a distinctive sound when running. This tells you whether the head is turning. If the head has stopped, proceed as follows:

1. Reduce the pressure to approximately 5 bar.
2. Withdraw the Bulldog® nozzle while keeping the water running to prevent dirty water from entering through the nozzle inserts.
3. Check that the head turns freely and that all nozzle inserts are clear. If the head can turn and the inserts are clear, try again.
4. If the head still does not turn, contact your dealer and send the nozzle in for repair.



The recommended working pressure at the nozzle is 100 bar. Take the pressure drop in the hose system into account. At lower working pressures, the head will not rotate reliably.

5.5.2 Bulldog® nozzle head turns slowly or not at all

Each enz® nozzle is configured for a specific jetting truck. Replacing the truck or changing the hose size can affect head rotation. If the jetting system parameters change, contact your dealer or visit my.enz.com to recalculate the nozzle configuration. Then replace the nozzle inserts as specified by MyEnz.



CAUTION!

Follow the values and warnings in the nozzle calculator at my.enz.com. Incorrectly configured nozzles may be destroyed!

©2026 enz® technik ag

6 Maintenance

Users with the necessary knowledge may carry out the maintenance and repair tasks described in these operating instructions.

6.1 Nozzle inserts

Check the nozzle inserts regularly. Wear depends on how contaminated the water is. When using recycled water, check the inserts **daily** and clean them if necessary.



CAUTION!

Worn nozzle inserts reduce cleaning performance and increase the risk when working at higher pressure. When working with recycled water, check the nozzle inserts daily.

If you do not know the diameters of the nozzle inserts, use the nozzle calculator at my.enz.com to determine them. First read **section 3.4 on page 12**.

6.1.1 Replacing nozzle inserts

1. Remove the defective nozzle inserts.
2. Clean the internal threads in the nozzle and the external threads on the new inserts. All threads must be free of grease.
3. Apply Loctite 243 threadlocker (Part No. C192) to the external threads of the nozzle inserts.
4. Immediately screw the nozzle inserts into the tool body until they are fully seated, then tighten them hand-tight with the appropriate socket wrench.
5. Allow the threadlocker to cure for at least 24 hours.



CAUTION!

Replace damaged nozzle inserts only with identical inserts of the same diameter. Incorrect configuration can destroy the tool!

If the tool will be out of use for an extended period, spray the nozzle openings and connection thread with OIL SPRAY BIO (Part No. C191).

6.2 Disposal and environmental protection

The tools require no special disposal and can be recycled as scrap metal.

 ©2026 enz® technik ag

Clean pipes only if the composition of the wastewater is known, especially in the case of industrial wastewater. Never allow chemicals or other toxic substances to escape into the environment through damaged pipes.
Always report damaged pipes or leaked substances to your supervisor or the relevant authority.

Avoid excessive water consumption to help conserve natural resources.

©2026 enz® technik ag

7 Technical data



Figure 5 ***Bulldog® 408.030***

Part number		**408.030**	
	Connection thread	BSPP	3/8" & 1/4"
		NPT	3/8" & 1/4"
	Drive jets	2 x M6	
	Thrust jets	-	
	Recyclable	YES	
	Weight	0.35 kg 0.8 lbs	
	Pipe diameter	35 – 80 mm 1.4 – 3.1 inch	
ØxL	Dimensions	31.5 x 77 mm 1.2 x 3 inch	
	Min. flow at 100 bar (1450 psi)	15 l/min 3.96 US GPM	
max	Maximum working pressure	350 bar 5000 psi	

©2026 enz® technik ag

8 Accessories

Image	Description	Part number
	Loctite 243, 50 ml	C192
	Oil Spray Bio, 500 ml	C191

©2026 enz® technik ag

9 Index

9.1 Figures

Figure 1 ***Operating principle of the Bulldog® 30*** *11*
Figure 2 ***Bulldog 30 head offsets*** *12*
Figure 3 ***Work area with barriers and warning signs*** *14*
Figure 4 ***Oil Spray Bio, 500 ml*** *16*
Figure 5 ***Bulldog® 408.030*** *20*

 ©2026 enz® technik ag



enz® technik ag
Schwerzbachstrasse 10
CH-6074 Giswil / Switzerland
Tel. +41 41 676 77 66
info@enz.com
www.enz.com