Wire Rope and Chain Scrapers

10.400R
10.400RS

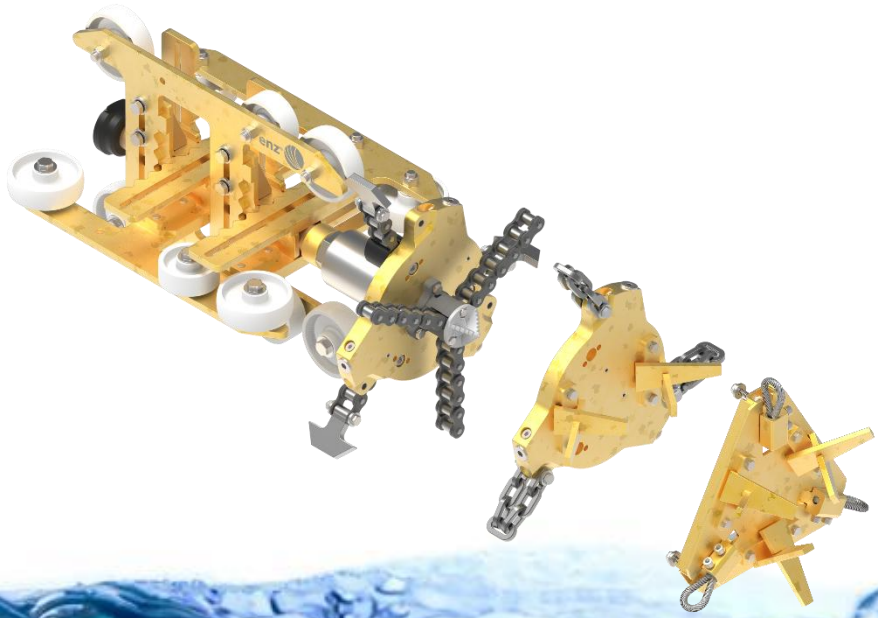

Operating Manual
English
October 26| Version 1.3

Table of Contents

Preface **3**
Purpose of the document **3**
1 Safety **4**
1.1 Noncompliance with the safety information and its consequences 4
1.2 Target group 4
1.3 User requirements 4
1.4 Explanation of general safety instructions 5
1.5 Information provided in these operating instructions 5
1.6 Intended use 5
1.7 Safety warnings for modifications 6
1.8 Protective equipment for working in manholes, excavations, and sewer lines 6
1.9 General safety instructions 8
2 Legal **10**
2.1 Copyright 10
2.2 Exclusion of liability 10
2.3 Warranty conditions 10
3 Wire rope and chain scrapers **11**
3.1 Introduction 11
3.2 Application 11
4 Installation **12**
4.1 Assembling the tools 12
4.2 Preparatory work 12
4.3 Setting up the work area 12
4.4 Adjusting the wire rope and chain scraper to the sewer line diameter 13
5 Operation **15**
5.1 How to operate the tools 15
5.2 Cleaning pipes with minor damage 15
5.3 After use 16
5.4 Completing the work process 16
5.5 Troubleshooting 16
5.5.1 Chain scraper is prevented from rotating 16
5.5.2 No more forward movement 17
6 Maintenance **18**
6.1 Maintenance after each use 18
6.2 Nozzle inserts 18
6.2.1 Replacing the nozzle inserts 18
6.3 Replacing parts 19

 ©2026 enz® technik ag

6.4 Disposal, environmental protection 19
7 Technical Data 20
7.1 Adjusting the chains for 10.400R 22
7.2 Adjusting the chains for 10.400RS 24
7.3 Replacing the chains: 25
7.4 Wire rope head 0010.400S 26
7.5 Replacing brushes & loops 27
7.6 Center head 0010.4004R 27
7.7 Pull part 0010.2006 28
7.8 Adjusting the skids 29
7.9 Skid for ovoid profile 10.4008R 30
8 Scope of delivery / Supplies 31
9 Index 33
9.1 Drawings 33
9.2 Figures 33
10 Notes 34

Version	Revision	Date	Initials
1.0	Created	July 2023	bbi
1.1	Part number 10.2008R added	September 2025	Lgo
1.2	Item numbers adjusted on exploded view drawing	February 2026	Bbi
1.3	Part number 610.1030 replaced by 3.1030	October 2026	Lgo

 ©2026 enz® technik ag

Preface

Dear valued customer,
Thank you for the confidence and trust you've placed in us by purchasing one of our products.
We always appreciate suggestions and new design ideas. Your feedback will help us improve the design of our product and the associated documentation.

If you have any questions or suggestions, please contact our Customer Service Department.

enz® technik ag
Tel. +41 41 676 77 66
info@enz.com

Feedback form
www.enz.com/en/header/feedback

Person responsible for the documentation:
Bryan Bieri (Tech. Support / QM Manager)

We reserve the right to modify and further enhance our products without prior notice as a result of technological advances. Misprints reserved.

Purpose of the document

The purpose of this manual is to instruct you on how to use our product correctly, effectively, safely, and for its intended purpose. The user will be informed about risks, reasonably foreseeable misuse, and residual risks.



Important!
Read carefully before use.
Keep for later reference.

Please read this operating manual thoroughly before using the cleaning tool. Make sure that all employees who work with the product know how to use it correctly.

The operating manual must be available to all operating personnel at all times. It must be kept in an easily accessible place.

If the manual is misplaced or destroyed, a new copy can be requested from your nearest dealer or from the manufacturer directly.

1 Safety

1.1 Noncompliance with the safety information and its consequences

Disregarding these safety instructions may lead to accidents and severe personal injuries, material damage, and damage to the environment.
The manufacturer cannot be held responsible for any damages resulting from non-compliance with these instructions.

1.2 Target group

This manual is intended for all persons who will be involved in the assembly, start-up, and operation of the pipe cleaning tool.

1.3 User requirements

Personnel intending to assemble, start up and operate the tool must...

- Be familiar with the field of sewer maintenance work and possess the appropriate technical knowledge.
- Be trained and instructed appropriately in the use of the product.
  Have read and understood the operating manual, in particular the section on "**Safety**"

If your personnel do not possess the necessary knowledge, they must be trained and instructed on it. If necessary, the pipe cleaning tool manufacturer can provide this instruction and training.

Only the maintenance and service activities described in this manual may be performed by users who have met the above-listed requirements. Any additional maintenance and service work may be performed only by qualified specialist personnel from the manufacturer.



Please refer to the section on "**Maintenance**".

 ©2026 enz® technik ag

1.4 Explanation of general safety instructions

The general safety instructions in this section provide information about potential residual risks, which are inherent to the product and may occur unexpectedly, despite the proper usage of the product.
In order to prevent personal injuries, material damage, and damage to the environment, all personnel working with this product must comply with these safety instructions. It is mandatory for said personnel to read and to understand the information provided in this section.

1.5 Information provided in these operating instructions

	**DANGER!** Noncompliance may lead to serious injury or **loss of life**.
	**WARNING!** Noncompliance may lead to serious injury and / or cause a long-term disability.
	**CAUTION!** Noncompliance may lead to injury and considerable material damage, financial loss or damage to the environment.
	Information on the technically correct and efficient use of the product.

1.6 Intended use

The product is designed to clean the insides of pipes (sewer pipes). The following points must be followed to ensure proper use of the product:

- ⚠ The cleaning tool may be used only in pipes or pipe-like sewers. The profile to be cleaned must be free of leaks and surrounded by material.
- ⚠ The tool may be used on the following types of pipes:
  - PE pipes
  - Steel pipes
  - Concrete pipes
- ⚠ For use in pipes made of other material, please consult the manufacturer.

©2026 enz® technik ag

- ⚠ The product may be operated only in pipes with correctly installed and defect-free connections.
- ⚠ Cleaning areas (manholes, pipe branches etc.) need to be sufficiently secured during the operation, including during construction and cleaning work.
- ⚠ During the cleaning operation, **no** personnel are allowed inside the pipes or at either end of the pipes.
- ⚠ The maximum pressure indicated on the nozzle may **not** be exceeded.
- ⚠ Wastewater may **not** be drained into watercourses (creeks, rivers etc.).
- ⚠ The product must be inspected to ensure it is in proper working order before every start-up.
- ⚠ Defects must be rectified before start-up.
- ⚠ Use the tool only as intended. (Use only the correct wrench for nuts).
- ⚠ Secure the hose lines in such a way that they cannot become damaged during operation.
- ⚠ Only the accessories provided and approved by **enz® technik ag** may be used.

1.7 Safety warnings for modifications

No other changes or modifications to the pipe cleaning tool may be performed. Only parts authorized by the manufacturer may be used. The manufacturer is not liable for damage resulting from unauthorized changes to the product.

1.8 Protective equipment for working in manholes, excavations, and sewer lines

The employer must provide suitable personal protective equipment and ensure that it is worn by the employees during work.
In the following section, the protective equipment prescribed by Schweizerische Unfallversicherung SUVA (the Swiss Accident Insurance Organization) will be described.

For more information on this, refer to the brochure:
Safe entry and working in manholes, excavations, and sewer lines (in German, French & Italian)
Order number: 44062.d

Suva
Schweizerische Unfallversicherungsanstalt
Arbeitssicherheit
Postfach, 6002 Lucerne, Switzerland
For information:
Phone +41 41 419 51 11
For orders:
www.suva.ch/waswo
Phone +41 41 419 58 51



Respirators

Self-contained respiratory equipment for spending time in dangerous atmospheres and for use during rescue operations.



Respirators

Self-rescue respiratory equipment (devices with compressed air tanks or regeneration devices) for working in sewers and for first aid for injured persons.



Rescue harness

Rescue harness or protective clothing with a loop sewn into the neck. During rescue, the rescue rope will be attached to the neck loop. Injured persons will be lifted out using a rescue lifting device with a self-actuating load brake.



Suitable working clothing

Leak-proof clothing protects the skin from becoming soiled and from possible infections. Visually conspicuous work clothing makes the employee more visible to traffic.



Appropriate footwear

Safety footwear should, in particular, have good grip and be slip-resistant and leak-proof (e.g. rubber boots).



Gloves

Appropriate gloves will protect you from hand injuries and contact with materials that could impair your health and from untreated water.



Hardhat

The hardhat will protect your head from falling objects and from bumping into fixed components and objects.

©2026 enz® technik ag



Hearing protection

If there is noise that could damage your hearing, you must wear, e.g. earmuffs with built-in headphones and microphone.



Eye protection

Your eyes should be protected against grit, sprayed dangerous substances, etc.



Lighting independent of the power grid

For example, you should carry a waterproof flashlight or wear a flashlight attached to your hardhat.

1.9 General safety instructions



Danger! | High-pressure water jets

Defects in or unintended use of the product could cause hazards due to pressurized water spray. Never remain in the channel during operation. Ensure that the product is in perfect condition before operation. Highly concentrated water jets can cause serious injury and could even sever limbs.



Danger! | Toxic vapors

There can be toxic vapours in sewer lines. Wear the prescribed protective equipment such as gas masks, gas warning devices and rescue harnesses. Inhaling toxic vapours or air that is contaminated with particles could be **fatal** or lead to serious injuries if the particles enter the lungs.



Warning! | Falling objects

Around open manholes, objects can fall down into the manhole and onto the people below. Never remain directly beneath the manhole opening when guiding the products in. Secure the manhole entrance against parts that could fall. Do not throw any tools or objects down into the manhole. Do not enter any manhole where there is a danger of falling. Personnel could become trapped.



Warning! | Chemical burns

There may be unidentified, corrosive, or otherwise harmful substances in the sewer line. Put on appropriate protective clothing. Use the protective equipment prescribed. Otherwise, you could suffer from chemical burns to your skin and eyes or become infected with pathogens.

	**Warning! | Falls from height** Open manholes are to be expected in the area where you will be working with the product. You must warn people about open manholes. Pay attention to where you are walking.
	**Warning! | Hand injuries** In case of tampering with the product, there is a risk of hand injury due to getting caught or abrasion. Wear gloves during work. Pay attention to where you grip the product. Always have sufficient people carry heavy, or over-sized, equipment. Consequences can include crushing injuries, abrasions or even the loss of a limb.
	**Caution! | Sharp objects** If the product is tampered with, there is a risk of hand injuries due to sharp edges. Wear gloves during work. Pay attention to where you grip the product. Consequences can include cutting injuries to your hands or other parts of your body.
	**Caution! | Trip hazards** Lines and other objects are to be expected on the ground in the area around where the product is being used. Pay attention to where you are walking. Keep the area of use tidy. Tripping and falling could cause serious injuries.

2 Legal

2.1 Copyright

This manual shall not be duplicated partially or in its entirety without the prior written permission of **enz® technik ag**. It shall not be photocopied, reproduced, translated, or converted into an electronic or machine-readable format.

©2026 enz® technik ag, 6074 Giswil, Switzerland.
All rights reserved.

2.2 Exclusion of liability

The manufacturer is not liable for damage that:

- Is caused as a result of unauthorized changes to the product.
- Is caused by not following the safety instructions.

2.3 Warranty conditions

In accordance with our sales and delivery conditions, we offer a warranty. However, the warranty is voided if:

- The product is used under conditions that are not permitted by us.
- Replacement and accessory parts that are not original replacement and accessory parts from **enz® technik ag** are used.
- If there is damage due to:
    - Improper use
    - Not following the operating manual
    - Unsuitable operating equipment
    - Incorrect or improper routing of the hose or pipelines
    - Unauthorized changes or modifications to or conversions of the product.

3 Wire rope and chain scrapers

3.1 Introduction

enz® chain scrapers are universally usable tools.

The same tool can be adapted and used for a wide range of pipe diameters. Different deposits such as limescale, cement slurry, roots, etc. can be removed efficiently.

Tools with Art No. 10.XXXR can be operated with recycled water.

In addition, enz® chain scrapers can be modified in various ways. Simple handling and maintenance are also traits that go hand-in-hand with enz® chain scrapers.

3.2 Application

- Used to prepare for restoration work, such as relining, grouting, or applying coatings
- Complete root removal
- Removal of incrustations and deposits
- Removal of concrete residues in newly-laid channel pipelines (for acceptance inspection)

©2026 enz® technik ag

4 Installation

4.1 Assembling the tools

All tools are supplied ready to be used. Once the tools have been unpacked, please check the content for completeness.

4.2 Preparatory work

It makes sense to clarify some points before use. Knowledge of the following points is helpful during preparations and when adjusting the wire rope and chain scraper:

- Layout of the pipes
- Inner pipe diameter of the sewer line where work will be performed
- Pipe material of the sewer line where work will be performed
- Type of foreign material in the pipe
- Planned flushing direction → We recommend that you work against the direction of the water flow.
- Any type of gradient in the sewer line where work will be performed
- Access points to the sewer line

4.3 Setting up the work area

Prior to working with a wire rope or chain scraper, the following procedures must be followed:


Set up barriers and safety equipment (warning triangle, block off the area, etc.)


The work area must be blocked off and secured so that there is no risk of falling or other traffic-related dangers.


The necessary information on the wastewater flowing through the manhole must be obtained (chemicals, gas, vapors, etc.)


Measuring instruments such as explosive gas meters, oxygen meters, gas warning devices, etc. must be readily available.


You must ensure that the appropriate nozzle sizes for cleaning the pipes are available. The application range of each nozzle is listed in the "Technical data" section on Page 20.

⚠ The layout of the pipes (manhole drawings) must be known before starting the work so that the nozzle can be prevented from emerging at a pipe end. Support personnel must be on hand to monitor possible emerging points.

⚠ Have the liability waiver signed by the customer to protect against any claims for damages.

⚠ If the tools are heavy, then a tripod winch is required to lower the wire rope or chain scraper into the manhole. It should not be lowered into manhole by the hose.



Figure 1 ***Blocked off & signed work area***

4.4 Adjusting the wire rope and chain scraper to the sewer line diameter

A wire rope or chain scraper must always be adjusted to the inner diameter of the pipe where work will be performed.

Chain lengths are selected to ensure that the ends are always scraping against the pipe wall. This prevents the tool from rotating too fast during operation and causing unnecessary damage to the tool and the pipe.

The skids can be adjusted on some articles in the wire rope and chain scraper series; in others, the skids and the chains are replaced based on the sewer line diameter. When adjusting the skid and cage settings, always use the largest possible setting for the inner sewer line diameter being worked on.

To correctly install your wire rope or chain scraper, please refer «Technical data on page 20»,

You will find tool-specific information on the chains, ropes and skids to be used and how to adjust them there.

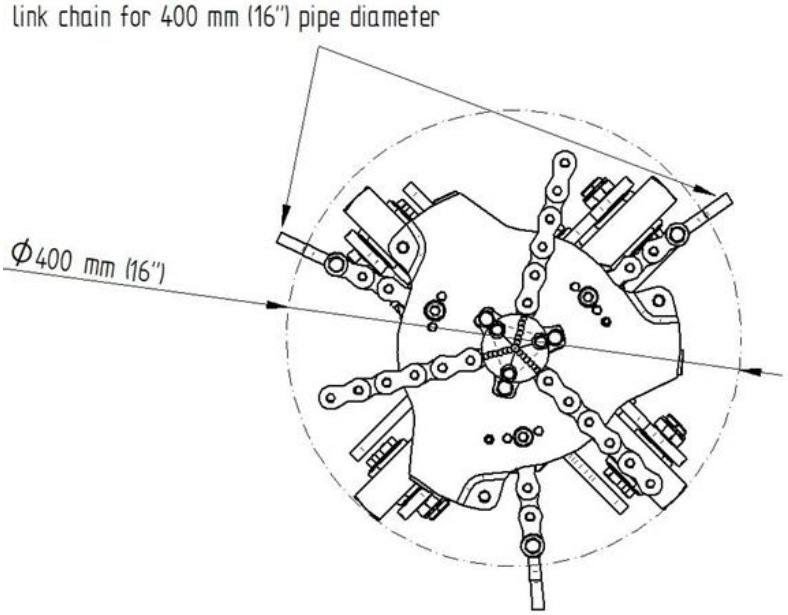

Drawing 1 ***Chain length greater than pipe Ø***

Caution!

Always use the correct chain or rope length. The chains or ropes must drag along the pipe wall, and they must **not** strike the wall! Otherwise, the pipe wall or the product could become damaged.

5 Operation

5.1 How to operate the tools

1. Flush all loose debris from the pipe prior to working with a standard nozzle. Loose debris can interfere with the work. If need be, you must use a pointed nozzle or a Bulldog, with their specialized front jet features, to clear the pipe of roots.
2. The chain scraper is screwed onto the hose unrolled from the vehicle. The thread dimension depends on the size of the chain scraper.
3. Push the wire rope or chain scraper at least half of its length into the pipe to be cleaned. If possible, you should work against the direction of flow.
4. Increase the pressure on the wire rope or chain scraper up to 100 – 120 bar (1450 – 1740 psi) - while paying attention to any loss of pressure in the hose.
5. Keep an eye on the forward motion while unrolling the hose and pay attention to the noise from the work. If you notice any irregularities, refer to Troubleshooting in Section 5.5 on Page 16.
6. Also allow water to run when retracting the wire rope and chain scraper so that the nozzles do not become clogged.
7. Close the manhole cover once work is completed.

Normally, the head of the nozzle will turn in a counter-clockwise direction when in use. Meanwhile, the connecting thread will turn in a clockwise direction. This prevents the nozzle from detaching itself from the connecting thread during operation.



Continue to run the water at low pressure when retracting the tool. This prevents wastewater from entering the interior of the nozzle, which can lead to failure.

5.2 Cleaning pipes with minor damage

Slightly damaged pipes usually exhibit cracks in the pipe wall. If detected, always contact the customer or the appropriate authorities.

When working inside a slightly damaged pipe, extreme caution must be used. Use of the tool is always at your own risk! **enz® technik ag** waives all liability!



DANGER!

When cracks are washed out, pipe fragments can break off and the material surrounding the pipe may be flushed out. When in doubt, you should not use the product. Using it in these circumstances can result in collapsed channels.

5.3 After use

After you have completed work, you must still do the following:

1. Rinse the tool with fresh water.
2. Spray OIL SPRAY BIO (Item no. C191) on the entire tool. Then manually turn the rotor several times.
3. Then check the tool for traces of wear and replace any defective parts if needed.

5.4 Completing the work process

If possible, use a camera to inspect the cleaned pipes. Look out in particular for any damage and ensure that no liquids can escape into the environment.
All manholes must be closed after the cleaning has been completed.

5.5 Troubleshooting

5.5.1 Chain scraper is prevented from rotating

The wire rope or chain scraper makes a characteristic noise. This sound will tell you whether the chain scraper is working or has become “stuck”.
When the chain scraper no longer turns:

1. Reduce the pressure.
2. Pull the chain scraper back about 500 mm (20 inch)
3. Carefully increase the pressure until you can hear that the chain scraper is working again.

5.5.2 No more forward movement

There are two possible reasons why the wire rope or chain scraper is no longer moving forward:

- A gap or relative displacement between two pipes is too large. There is a danger that the guide roller is stuck.
- The wire rope or the chain has caught on something or has become wedged in a gap.

If this is the case:

1. Pull the tool back.
2. Try to work from the other side.

If there is a danger that the pin bolt chains have become caught in existing or previously flushed-out gaps, then link chains should be used. If the gap is more than 20 mm (0.75 inch), then the chain scraper is not suitable.

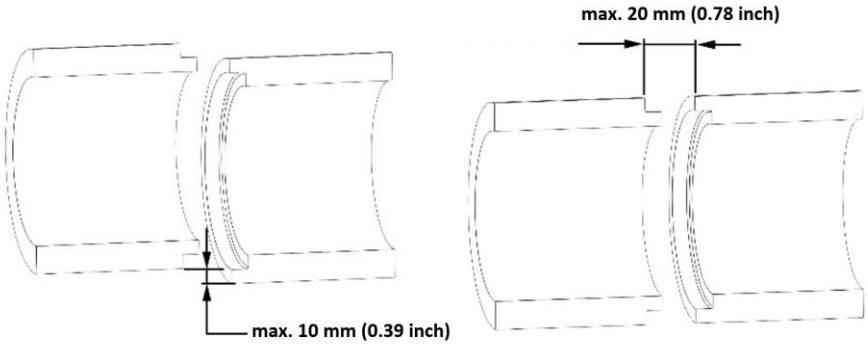

Drawing 2 ***Maximum offset***

 ©2026 enz® technik ag

6 Maintenance

The maintenance and service activities described in this manual may be performed only by users who have the required knowledge.

6.1 Maintenance after each use

1. Check the inserts for clogging.
2. Then check the tool for traces of wear and replace any defective parts if needed.
3. For corrosion protection and care, treat the tool with OIL SPRAY BIO (Item No. C191).



Figure 2 ***Oil Spray Bio, 500 ml***

6.2 Nozzle inserts

The nozzle inserts must be inspected regularly. Nozzle wear and tear depends on the degree of contamination in the water used. If recycled water is being used, the nozzle inserts must be inspected **daily** and cleaned if necessary.

	CAUTION
	Worn nozzle inserts impair cleaning results and increase risk when working with high pressure. If recycled water is being used, the nozzle inserts must be inspected daily.

If you do not know the nozzle diameter, JetCalc must be used to determine it.

6.2.1 Replacing the nozzle inserts

1. Remove the defective nozzle inserts.
2. Clean the threaded holes and the new inserts. All threads should be grease-free.
3. Coat the nozzle insert threads with Loctite No.243 adhesive (Art. No.C192).
4. Immediately screw the nozzle inserts into the tool body as far as they will go, then use a socket wrench to slightly tighten each insert.
5. Wait at least 24 hours until the adhesive has hardened.

 ©2026 enz® technik ag



CAUTION!

Damaged nozzle inserts may be replaced only with identical nozzle inserts of the same diameter. If the tool is not correctly assembled, the tool or the pipe may become damaged.

If the tool is due to remain unused for an extended period, spray the nozzle holes and the connecting threads with OIL SPRAY BIO (Item No. C191).

6.3 Replacing parts

A qualified user is allowed to replace all parts that are fitted during installation and the following additional parts:

- Chain sets
- Wire brushes
- Wire rope loops
- Nozzle inserts
- Skids & cages

Any additional maintenance and service work may be performed only by qualified specialist personnel from the manufacturer.

6.4 Disposal, environmental protection

The tools do not require any special disposal procedure, and they can be disposed of with other scrap metal without problems.

Please note that pipes are cleaned only if the composition of the wastewater is known (industrial wastewater in particular). Under no circumstances may chemicals or other toxic substances flow through defective pipes and enter the environment.
Defective pipes or leaking substances must be reported to the supervisory body or appropriate authority.

Do not use excessive amounts of water. This will help conserve our natural resources.

7 Technical Data

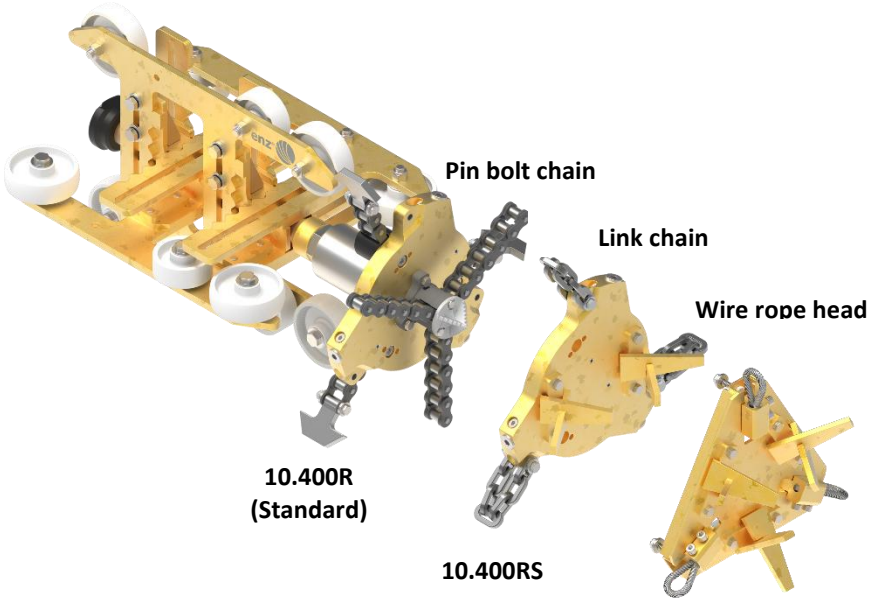

Figure 3 ***10.400R, 10.400RS, Wire rope***

10.400R
Standard chain scraper for slight to serious root penetration.

10.400RS
For machining delicate tubes with large tube offset. No danger due to jamming of the chain.

10.400R / RS			
Connecting Thread BSPP	1"	**Application range**	400–800 mm 16 – 32 inch
min. flow at 100 bar (1450 psi)	300 l/min 79 US gpm	**Rotating jet**	3xM10
Thrust jet	3xM10	**Dimensions**	385 x 625 mm 15.2 x 24.6 inch
Weight	47 kg 103.62 lbs	**For recycling water**	Yes
Maximum working pressure	200 bar 2900 psi		

©2026 enz® technik ag

Drawing 3 ***Exploded drawing of 10.400R***

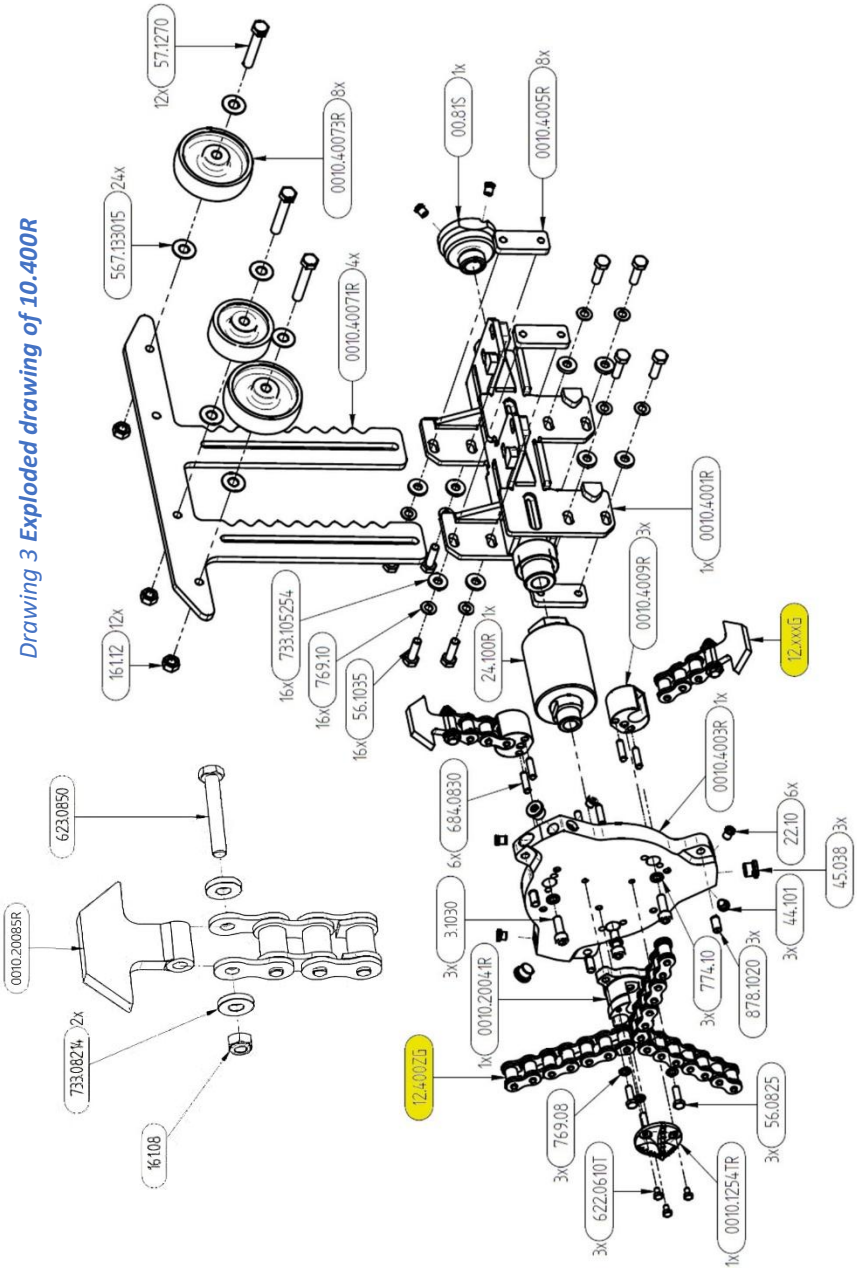

©2026 enz® technik ag

7.1 Adjusting the chains for 10.400R

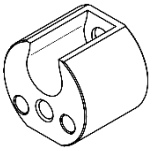

The diameter information is required to assemble the chains on chain holders 0010.4009R (left)! The center chain 12.400ZG is mounted in the chain holder 0010.20041R.

Drawing 4 ***Chain holder 0010.4009R***

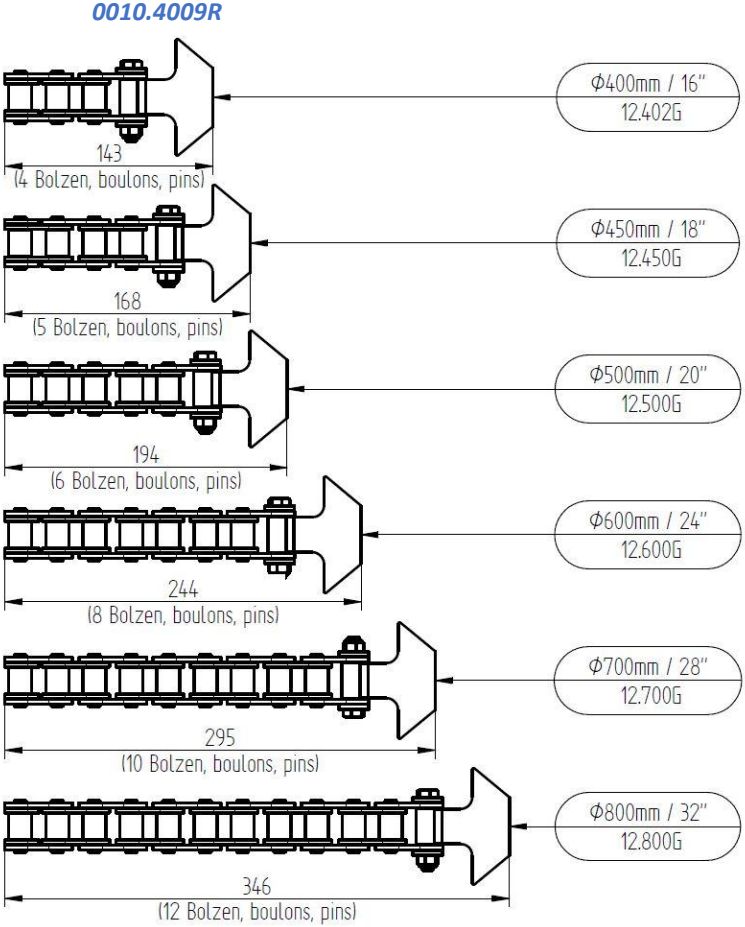

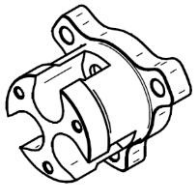

Drawing 5 ***Chain holder 0010.20041R***

Drawing 6 ***All chains for 10.400R***

Chains are sold by the meter or tailored to the size you need and are available from your dealer or from **enz® technik ag**.

One meter of pin bolt chain **Art. No.:** **12.G**

Drawing 7 ***Exploded drawing of 10.400RS***

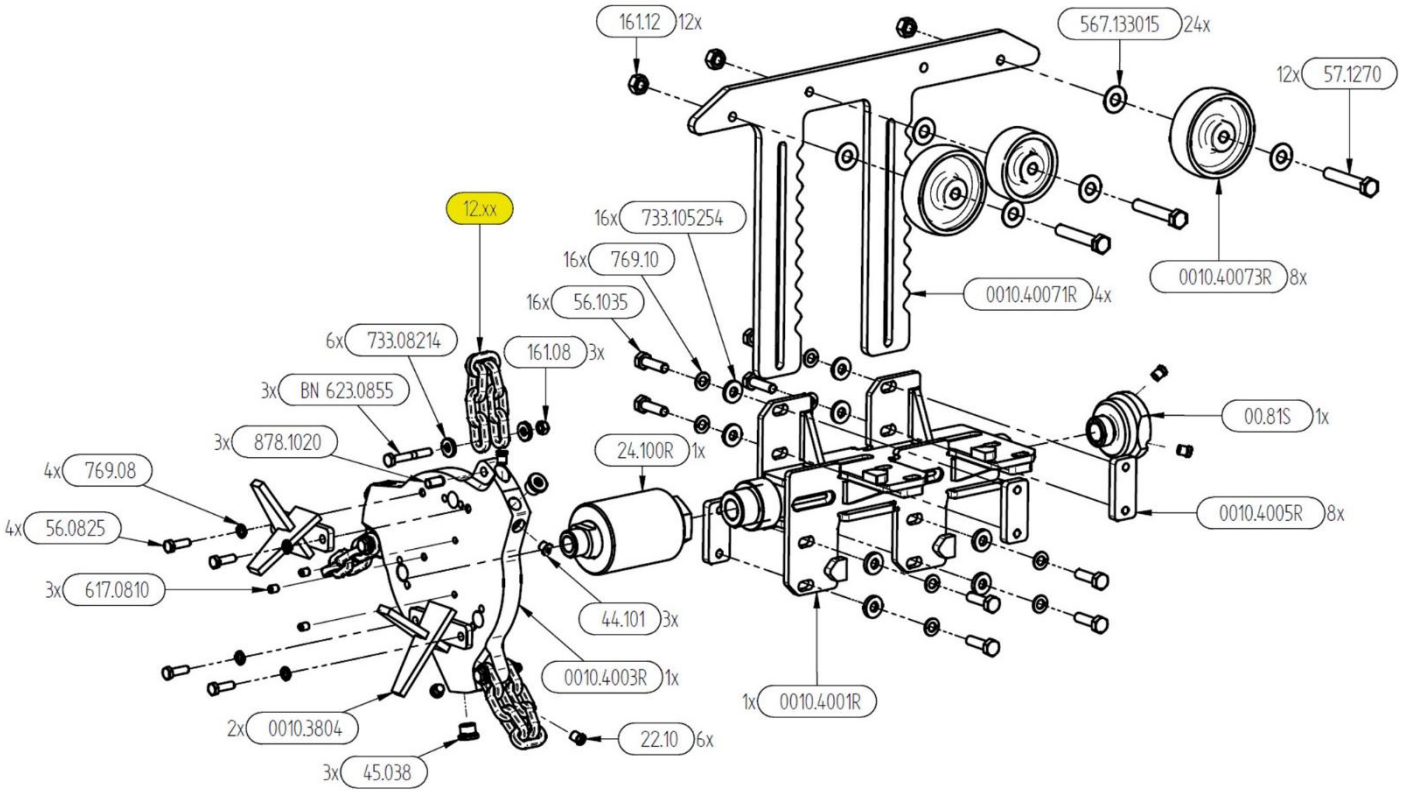

1 set of 3 chains see
Drawing 8 All chains for 10.400RS

©2026 enz® technik ag

7.2 Adjusting the chains for 10.400RS

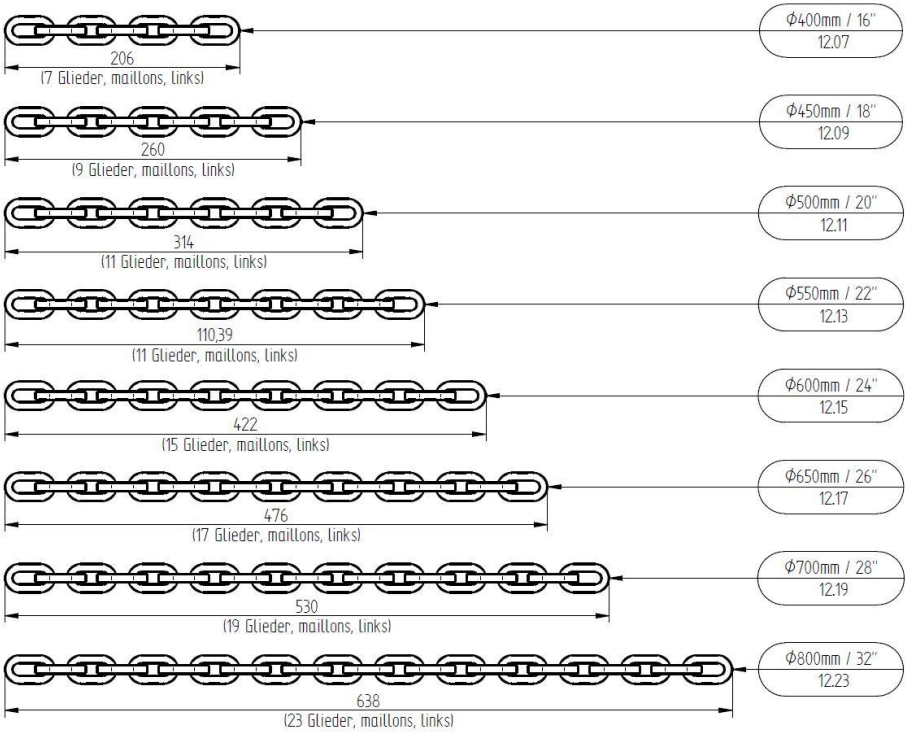

Drawing 8 ***All chains for 10.400RS***

Chains are sold by the meter or tailored to the size you need and are available from your dealer or from **enz® technik ag**.

One meter of link chain **Art. No.:** **12**

 ©2026 enz® technik ag

7.3 Replacing the chains:

1. Determine the correct chain or wire rope length using the drawing:
   - 10.400R Drawing 6
   - 10.400RS Drawing 8
2. Loosen the appropriate screws and remove the old chains.
   - 10.400R Drawing 3 Screw 3.1030
   - 10.400RS Drawing 7 Screw 623.0855
3. Clean the threaded holes.
4. Place the chains and screw the screws in such a way that the link chains are able to move freely.

©2026 enz® technik ag

7.4 Wire rope head 0010.400S

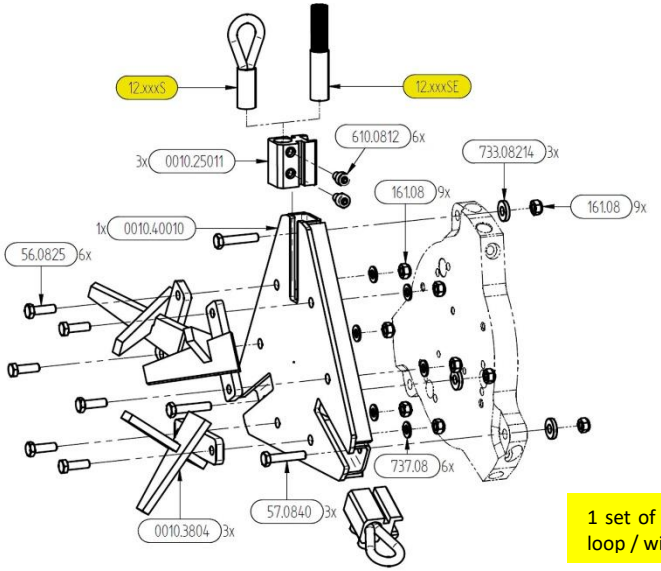

1 set of 3 wire rope loop / wire brushes

Drawing 9 ***Exploded drawing of wire rope head 0010.400S***

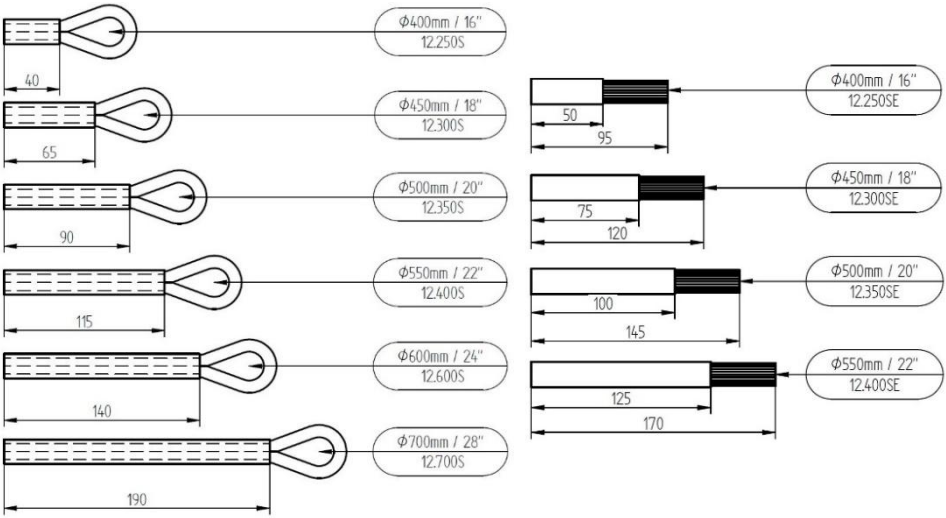

Drawing 10 ***All wire rope loops & wire brushes for wire rope head 0010.400S***

7.5 Replacing brushes & loops

1. Determine the correct loops or brushes using Drawing 10.
   The diameter range is indicated on the cable loop.
2. Push the loops (12.xxxS) or brushes (12.xxxSE) into the slide element (0010.25011) as far as they will go.
3. Tighten the screws (610.0812) using a torque of **24 Nm**.

7.6 Center head 0010.4004R

The center head is a wear-replacement part set. The articles shown in Drawing 11 are part of the scope of supply.

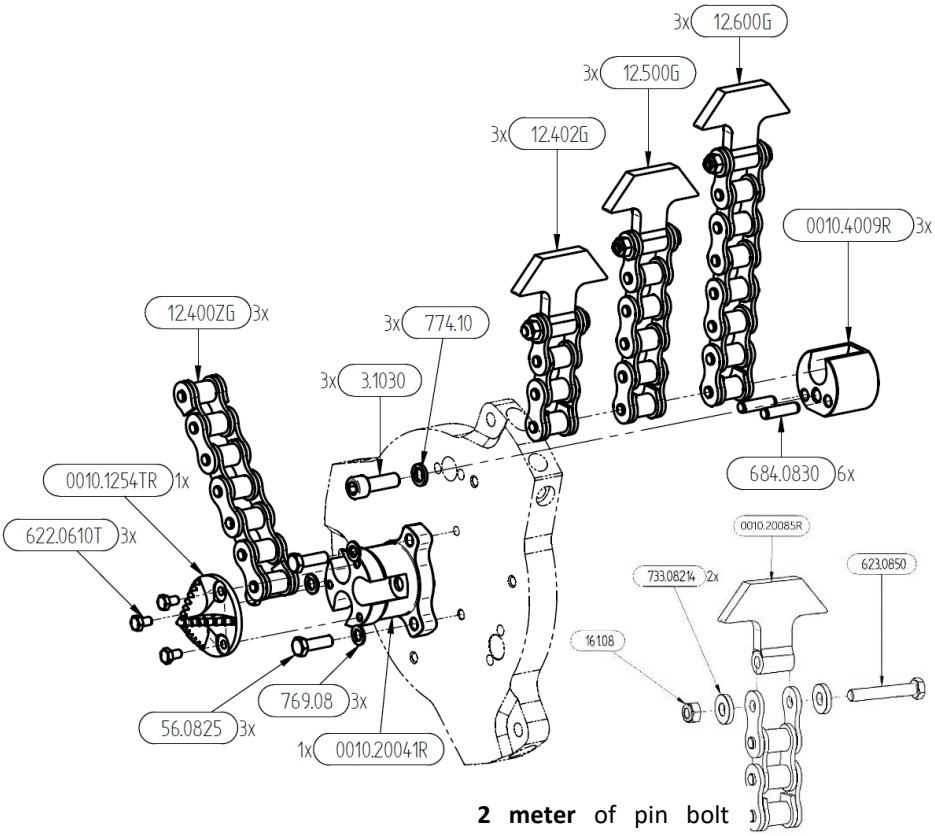

2 meter of pin bolt chain **12.G** (*per meter)*

Drawing 11 ***Center head 001.4004R***

©2026 enz® technik ag

7.7 Pull part 0010.2006

If required, the 10.400R can be pulled with a winch. The pull part shown is required for this purpose.

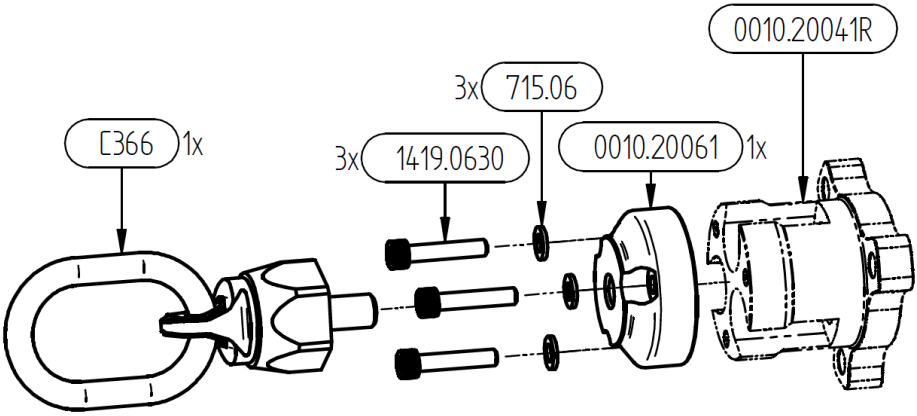

Drawing 12 ***Explosion of pull part 10.400R***

The pull part (0010.2006) is mounted on the existing chain holder (0010.20041R). For this purpose, the root knife (0010.1254TR) must be removed beforehand.

 ©2026 enz® technik ag

7.8 Adjusting the skids

The skids can be adjusted in 50 mm increments. The respective effective circumferential diameter of these adjustments can be seen in Drawing 13. The nominal diameter of the pipe to be cleaned is in brackets.

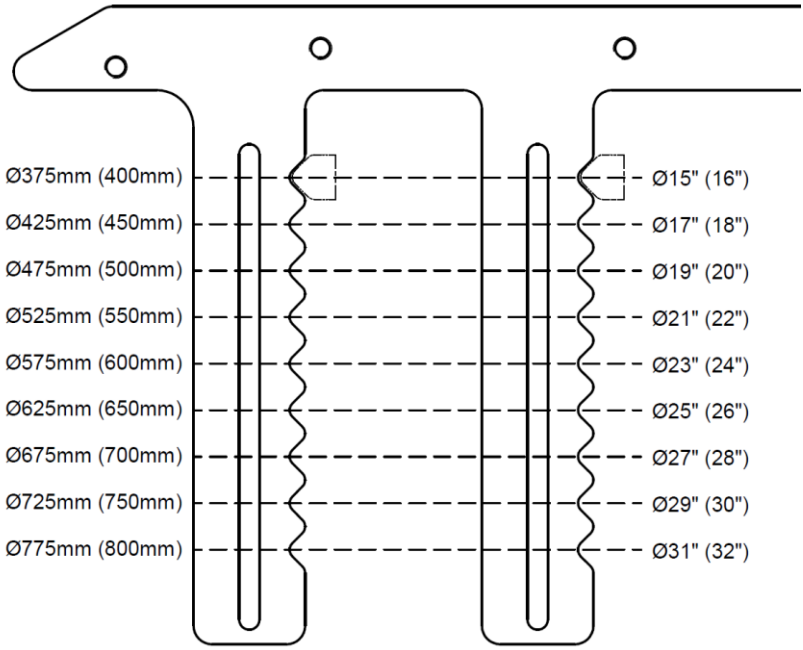

Drawing 13 ***Skid adjustment for 10.400R & 10.400RS***

To adjust the skids for the upcoming channel cleaning, proceed as follows:

1. Loosen the screws (56.1035) of the skids (0010.40071R) until the skid can be moved.
2. Slide the skid into the correct position according to Drawing 13.
3. Re-tighten the screws using a torque of **24 Nm**.

©2026 enz® technik ag

7.9 Skid for ovoid profile 10.4008R

The 10.400-series chain scrapers can also be operated in an ovoid profile.
The chain scraper axis must be as close to the center of the upper curve of the ovoid profile as possible. This can be ensured with the ovoid profile skid up to a maximum distance of 600 mm from the channel floor.
The following ovoid profiles can be cleaned with the 10.400R / RS:

Ovoid profile	Skid	Chains
400 mm / 600 mm (16" / 24")	Standard	12.200G
500 mm / 750 mm (20" / 30")	Standard Skid for ovoid profile 10.4008R	12.450G
600 mm / 900 mm (24" / 36")	10.4008R	12.500G

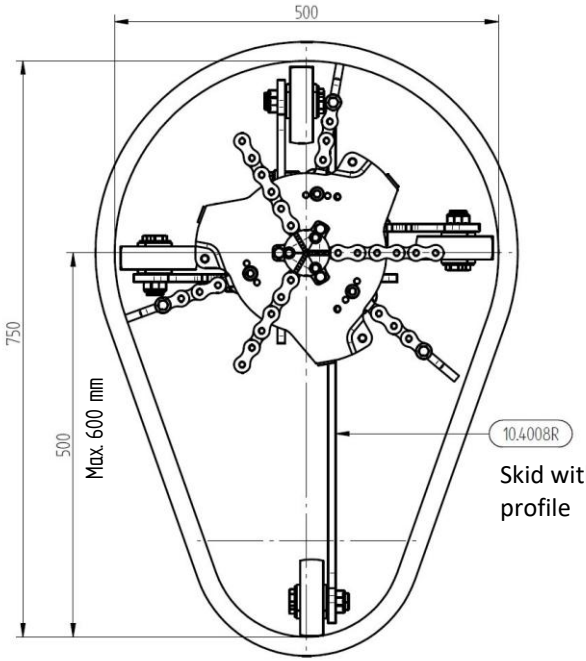

Skid with rollers for ovoid profile

Drawing 14 ***10.400R in ovoid profile 500–750***

CAUTION

In contrast to when the chain scraper is used normally, the chain ends are not allowed to scrape the pipe walls in an ovoid profile. There is a risk that they will smash the channel wall if they hit the profile again.

8 Scope of delivery / Supplies

Product image	Item name	Application range	Order-Nr.	10.400R	10.400RS
	Set of Pin bolt chain with plate	Ø 400 mm / 16"	12.402G	X	
		Ø 450 mm / 18"	12.450G		
		Ø 500 mm / 20"	12.500G	X	
		Ø 550 mm / 22"	12.600G		
		Ø 600 mm / 24"	12.600G	X	
		Ø 650 mm / 26"	12.700G		
		Ø 700 mm / 28"	12.700G		
		Ø 750 mm / 30"	12.800G		
		Ø 800 mm / 32"	12.800G		
		Per m / per yard	12.G	X	
	Set of Chain Plates with Screws	Ø 400 mm – 800 mm 16" – 32"	10.2008R	X	X
	Set of Center chain	Ø 400 mm – 800 mm Ø 16" - 32"	12.400ZG	X	
	Set of link chain	Ø 400 mm / 16"	12.07		X
		Ø 450 mm / 18"	12.09		X
		Ø 500 mm / 20"	12.11		
		Ø 550 mm / 22"	12.13		
		Ø 600 mm / 24"	12.15		X
		Ø 650 mm / 26"	12.17		
		Ø 800 mm / 32"	12.23		X
		Per m / per yard	12		
	Pull part 10.200R/10.400R	Ø 400 mm – 800 mm Ø 16" - 32"	0010.2006		
	Center head (all Ø)	Ø 400 mm – 800 mm Ø 16" - 32"	0010.4004R		
	Wire rope head	Ø 400 mm – 700mm Ø 16" - 28"	0010.400S		
	Set of Wire rope loop	Ø 400 mm / 16"	12.250S		
		Ø 450 mm / 18"	12.300S		
		Ø 500 mm / 20"	12.350S		
		Ø 550 mm / 22"	12.400S		
		Ø 600 mm / 24"	12.600S		
		Ø 700 mm / 28"	12.700S		
	Set of wire rope brush	Ø 400 mm / 16"	12.250SE		
		Ø 450 mm / 18"	12.300SE		
		Ø 500 mm / 20"	12.350SE		
		Ø 550 mm / 22"	12.400SE		

©2026 enz® technik ag

	Skid with rollers for ovoid profile	Ø 600 - 900 mm Ø 24" – 35.5"	10.4008R		
	Root knife 10.400RS	Ø 400 mm – 800 mm Ø 16" - 32"	0010.3804		
	Cover with cutter	Ø 400 mm – 800 mm Ø 16" - 32"	0010.1254TR		
	Set of link chains with plates	Ø 400 mm / 16"	12.07P		
		Ø 450 mm / 18"	12.09P		
		Ø 500 mm / 20"	12.11P		
		Ø 600 mm / 24"	12.15P		
		Ø 700 mm / 28"	12.19P		

©2026 enz® technik ag

9 Index

9.1 Drawings

Drawing 1 ***Chain length greater than pipe Ø*** *14*
Drawing 2 ***Maximum offset*** *17*
Drawing 3 ***Exploded drawing of 10.400R*** *21*
Drawing 4 ***Chain holder 0010.4009R*** *22*
Drawing 5 ***Chain holder 0010.20041R*** *22*
Drawing 6 ***All chains for 10.400R*** *22*
Drawing 7 ***Exploded drawing of 10.400RS*** *23*
Drawing 8 ***All chains for 10.400RS*** *24*
Drawing 9 ***Exploded drawing of wire rope head 0010.400S*** *26*
Drawing 10 ***All wire rope loops & wire brushes for wire rope head 0010.400S*** *26*
Drawing 11 ***Center head 001.4004R*** *27*
Drawing 12 ***Explosion of pull part 10.400R*** *28*
Drawing 13 ***Skid adjustment for 10.400R & 10.400RS*** *29*
Drawing 14 ***10.400R in ovoid profile 500–750*** *30*

9.2 Figures

Figure 1 ***Blocked off & signed work area*** *13*
Figure 2 ***Oil Spray Bio, 500 ml*** *18*
Figure 3 ***10.400R, 10.400RS, Wire rope head*** *20*

 ©2026 enz® technik ag

10 Notes



enz® technik ag
Schwerzbachstrasse 10
CH-6074 Giswil / Switzerland
Tel. +41 41 676 77 66
info@enz.com
www.enz.com