ANNOVI REVERBERI
The Power of Experience

BLITZ 10.12

Version:
Serial number:
Code: **8799**

10/07/2017

230 V - 50 Hz | **schuko**

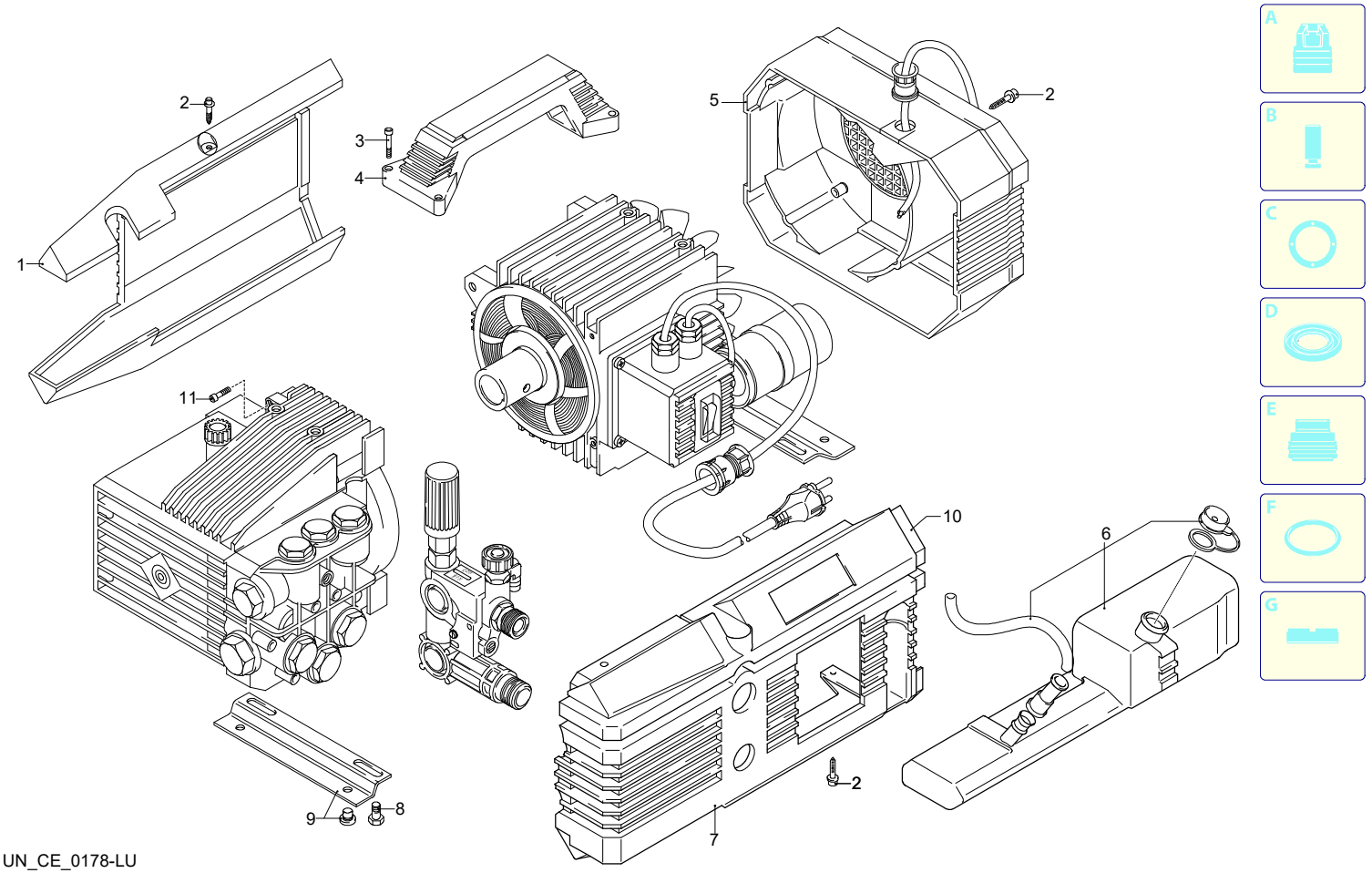

UN_CE_0178-LU

Validity	Pos.	Code	Description	Q
	1	1260270	Yellow casing	1
	2	1261551	Screw	10
	3	180030	Screw	4
	4	1260710	Handle	1
	5	1260311	Fan cowling	1
	6	1269110	Tank	1
	7	1261040	Yellow casing	1
	8	1260470	Screw	4
	9	1260830	Foot	2
	10	1260290	Yellow casing	1
	11	1260780	Screw	4

ANNOVI REVERBERI
The Power of Experience

BLITZ 10.12

Version:
Serial number:
Code: **8799**

10/07/2017

230 V - 50 Hz | schuko

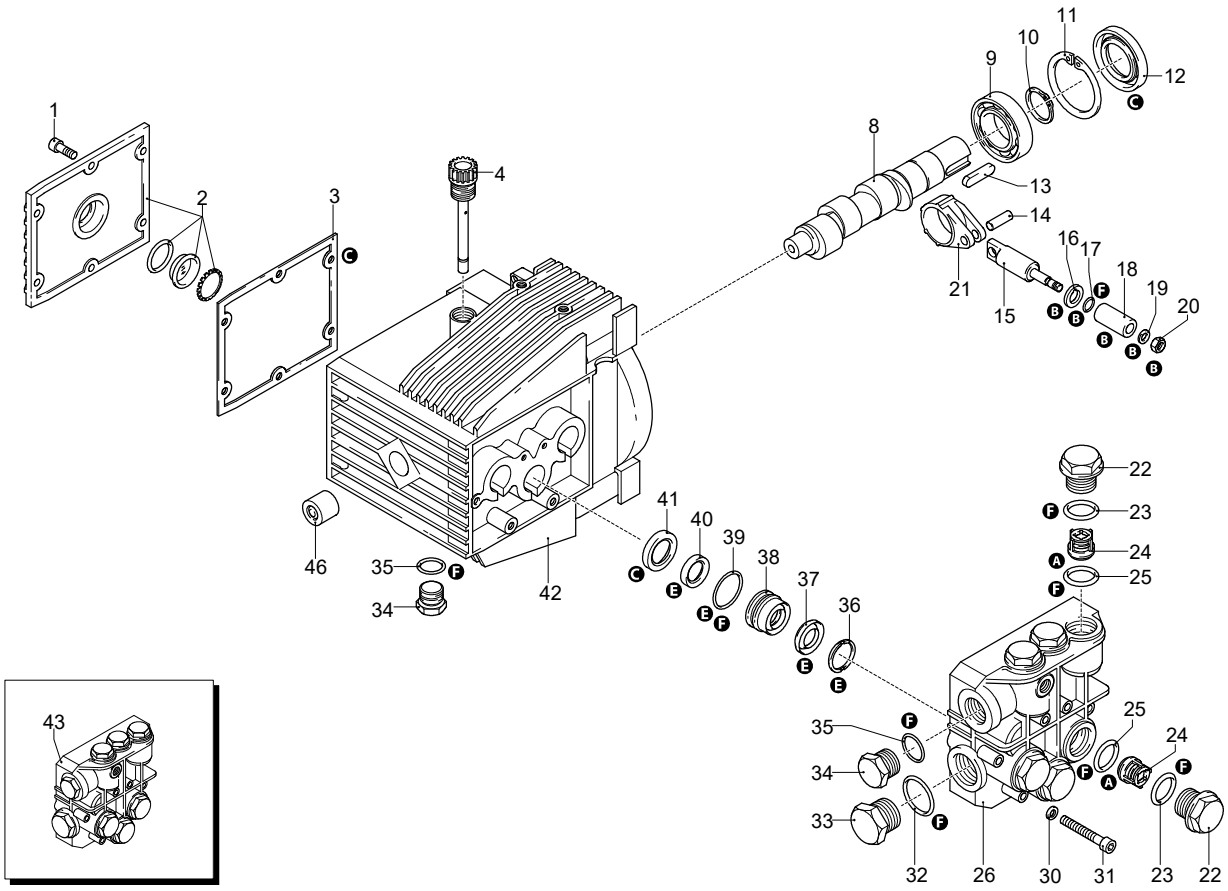

UN_CE_0069-BX

(3168)

Validity	Pos.	Code	Description	Q
	1	1260760	Screw	6
	2	1269101	Cover	1
	3	1260040	Oil seal	1
	4	1260480	Plug	1
	8	1321790	Shaft	1
	9	1320370	Bearing	1
	10	1260770	Ring	1
	11	1260790	Ring	1
	12	1260750	Ring	1
	13	1380520	Key	1
	14	1260080	Pin	3
	15	1260070	Piston	3
	16	1260091	Plate	3
	17	480480	O-ring	3
	18	1260120	Piston	3
	19	1260100	Washer	3
	20	1260110	Nut	3
	21	1260060	Connecting-rod	3
	22	1260162	Plug	6
	23	960160	O-ring	6
	24	1269050	Complete valve	6
	25	880830	O-ring	6
	26	1272830	Head	1
	30	1381550	Washer	6
	31	680570	Screw	6
	32	180101	O-ring	1
	33	820361	Plug	1
	34	1980740	Plug	2
	35	740290	O-ring	2
	36	1260141	Ring	3
	37	1271650	Water seal	3
	38	1260151	Piston guide	3
	39	1260420	O-ring	3
	40	1260440	Water seal	3
	41	1260460	Oil seal	3
	42	1260010	Pump body	1
	43	1269126	Head assembly	1
	46	1260050	Bushing	1
	A	1864	Valve kit	1
	B	2628	Piston kit	1
	C	1865	Oil seal kit	1
	E	1866	Water seal kit	1
	F	2040	Gasket kit	1

ANNOVI REVERBERI
The Power of Experience

BLITZ 10.12

Version:
Serial number:
Code: **8799**

10/07/2017

230 V - 50 Hz | **schuko**

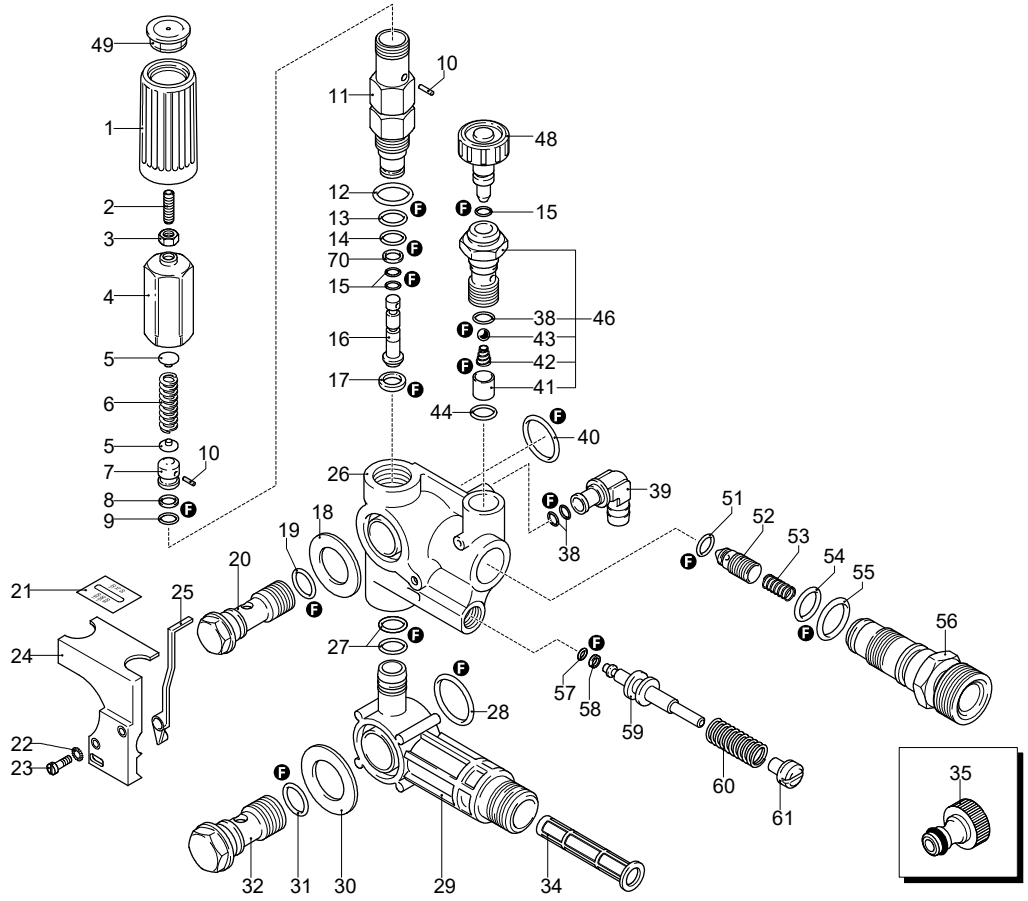

UN_CE_0071-HW

Validity	Pos.	Code	Description	Q
	1	1981780	Knob	1
	2	1980470	Screw	1
	3	1980300	Nut	1
	4	1980390	Insert	1
	5	1980220	Wobble plate	2
	6	1271070	Spring	1
	7	1080041	Piston	1
	8	1080401	Ring	1
	9	1080250	O-ring	1
	10	1080070	Pin	2
	11	1980210	Piston guide	1
	12	880830	O-ring	1
	13	740290	O-ring	1
	14	800560	O-ring	1
	15	1080190	O-ring	3
	16	1271160	Piston	1
	17	1080121	Seat	1
	18	1260570	Washer	1
	19	390080	O-ring	1
	20	1540272	Screw	1
	21	1270790	Plate	1
	22	395370	Washer	2
	23	395270	Screw	2
	24	1260530	Cover	1
	25	1260520	Table of Contents	1
	26	1270080	Valve body	1
	27	770140	O-ring	2
	28	1180140	O-ring	1
	29	1260540	Suction fitting	1
	30	1260560	Washer	1
	31	880270	O-ring	1
	32	2260420	Screw	1
	34	1260660	Filter	1
	35	1270940	Fitting	1
	38	480480	O-ring	3
	39	1260670	Fitting	1
	40	720030	O-ring	1
	41	1262940	Bushing	1
	42	1250270	Spring	1
	43	1250280	Ball	1
	44	880840	O-ring	1
	46	1269041	Injector	1
	48	1269010	Knob	1
	49	1981770	Plug	1
	51	1460430	O-ring	1
	52	1540170	Shutter	1
	53	1080091	Spring	1
	54	394280	O-ring	1
	55	1200690	O-ring	1
	56	1270091	Injector	1
	57	1260820	O-ring	1
	58	1264070	Ring	1
	59	1264060	Piston	1
	60	1264090	Spring	1
	61	1264080	Plug	1
	69	1279211	Combiset assembly	1
	70	1271170	Ring	1
	71	2980	Complete valve	1
	F	2715	Gasket kit	1

ANNOVI REVERBERI
The Power of Experience

BLITZ 10.12

Version:
Serial number:
Code: **8799**

10/07/2017

230 V - 50 Hz | **schuko**

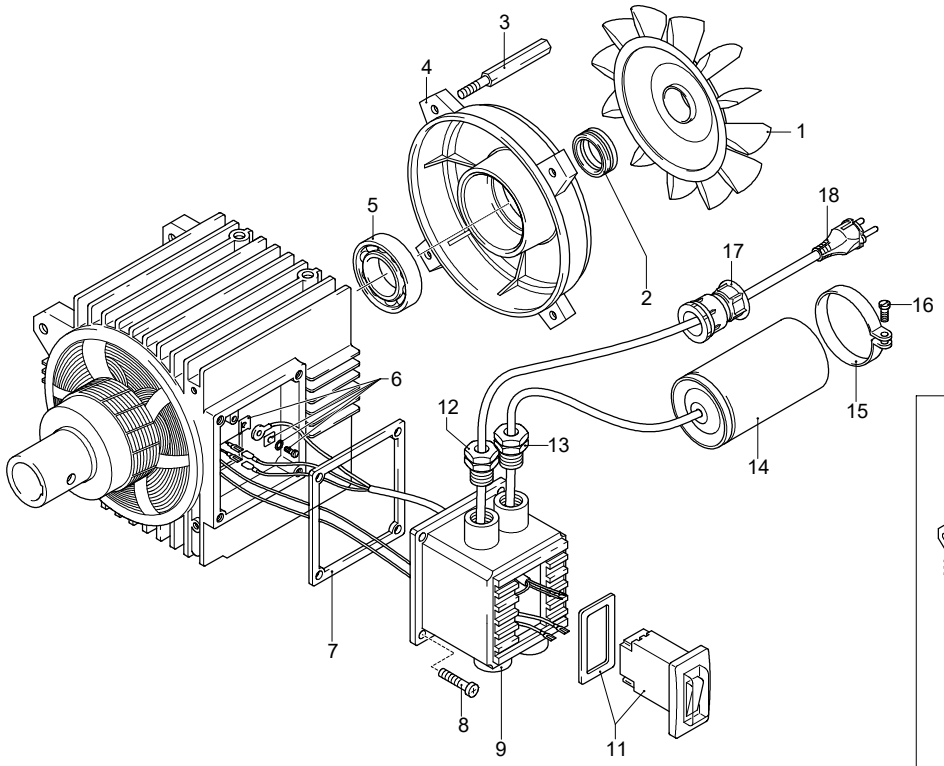

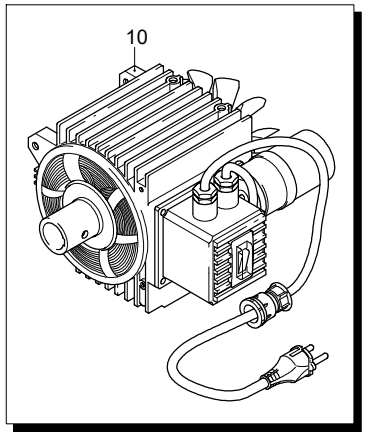

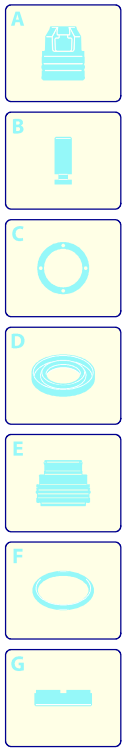

Validity	Pos.	Code	Description	Q
	1	1260300	Fan	1
	2	1260970	Seal	1
	3	1260360	Stud bolt	4
	4	1260960	Shield	1
	5	1260950	Bearing	1
	6	1269100	Clamp	1
	7	1260400	Gasket	1
	8	1261560	Screw	4
	9	1260340	Box	1
	10	4585	Motor	1
	11	1263790	Switch	1
	12	1271950	Cable retainer	1
	13	1269090	Cable retainer	1
	14	1266810	Capacitor	1
	15	1340280	Clamp	1
	16	1271880	Screw	1
	17	1262370	Orifice	1
	18	1270950	Cable	1

UN_CE_0070-LU

ANNOVI REVERBERI
The Power of Experience

BLITZ 10.12

Version:
Serial number:
Code: **8799**

10/07/2017

230 V - 50 Hz | **schuko**

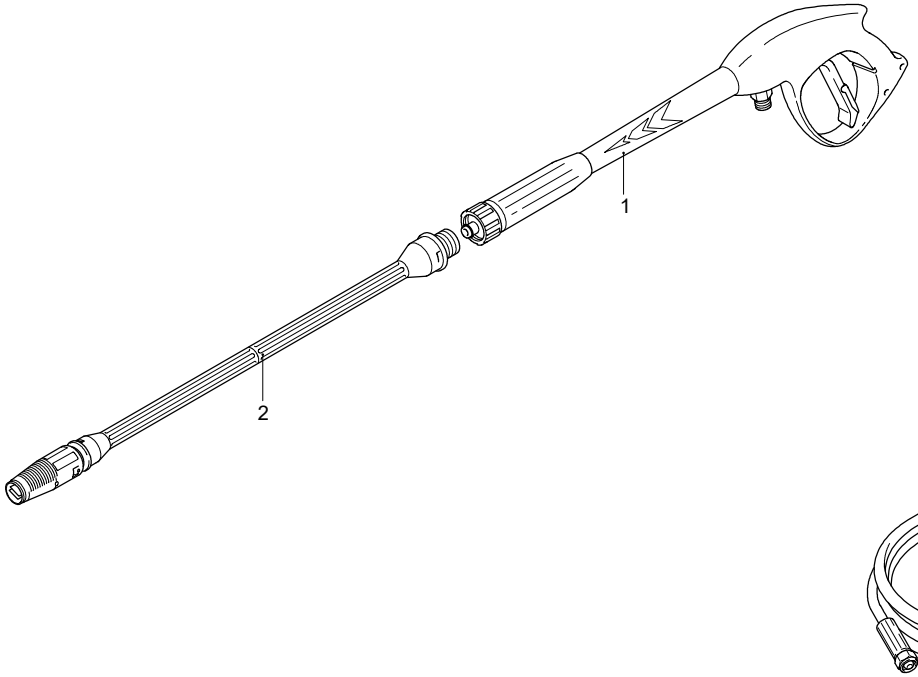

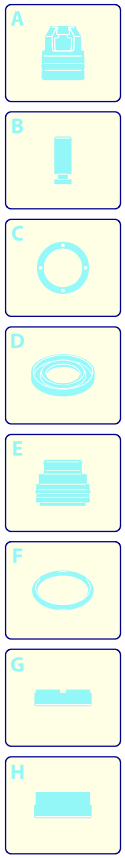

Validity	Pos.	Code	Description	Q
	1	40925	Gun	1
	2	40039	Lance+lance head	1
	3	1271351	High pressure hose	1
	4	2000770	O-ring	1

UN_CE_0061-CR