GENERAL PUMP *A member of the Interpump Group*

ZK6010

Trapped Pressure Unloader



SPECIFICATIONS

Part Number		ZK6010
Maximum Pressure		6000 PSI
Maximum Flow		2.11 to 10.6 GPM
Port Sizes:	Inlet	1/2” BSP-F
	Outlet	1/2” BSP-M
	Bypass	1/2” BSP-M
Shipping Weight		6.2 lbs

Dimensions

PARTS LIST

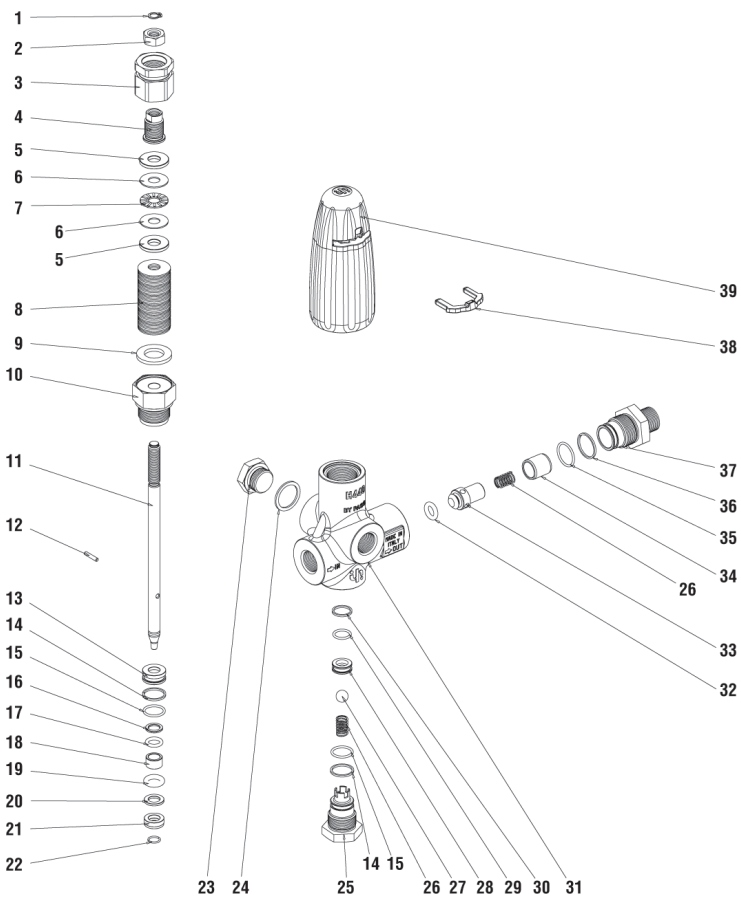

Item	Part Number	Description	KIT	Qty
1	90053100	Circlip, Ø 8		1
2	92236800	Nut, M10 x 1.25		1
3	36330764	Pressure Regulator Nut		1
4	36330664	Pressure Calibration Screw		1
5	36331064	Plate		2
6	91790900	Spacer		2
7	91790800	Bearing		1
8	94852500	Spring Plate, Ø 28x10.2x1.25	*	39
9	96737000	Washer, Ø 17 x 30 x 3		1
10	36330570	Bushing, Guide		1
11	36330466	Valve Rod		1
12	97613300	Pin, Ø 3 x 16		1
13	36330870	Bushing		1
14	90510000	Anti-extrusion Ring	*	2
15	90359300	O-ring, Ø 15.60 x 1.78	*	2
16	90506200	Anti-extrusion Ring	*	1
17	90382300	O-ring, Ø 9.82 x 2.62	*	1
18	36331582	Spacer2		1
19	90417500	O-ring, Ø 10 x 4	*	1
20	90505900	Anti-extrusion Ring	*	1
21	36330966	Seal		1
22	90006400	Stop Ring	*	1
23	98217600	Cap, G 1/2 x 10		1
24	96751400	Washer, Ø 21.5 x 27 x 1.5		1
25	36331370	Cap, M24 x 1.5		1
26	94737400	Spring, Ø 9.3 x 15.5	*	2
27	97483800	Ball, 13/32”	*	1
28	36331166	Valve Seat	*	1
29	90358900	O-ring, Ø 12.42 x 1.78	*	1
30	90508100	Anti-extrusion Ring	*	1
31	36330341	Body		1
32	90402800	O-ring, Ø 9.12 x 3.53	*	1
33	36328970	Shutter		1
34	36331482	Bushing, Shutterr Guide		1
35	90359600	O-ring, Ø 18.77 x 1.78	*	1
36	90513100	Anti-extrusion Ring	*	1
37	36331270	Nipple, G1/2		1
38	36329651	Yoke		1
39	363293511	Knob		1

*	KIT85	Repair Kit

ZK6010

Trapped Pressure Unloader

GENERAL PUMP *A member of the Interpump Group*

DIMENSIONS

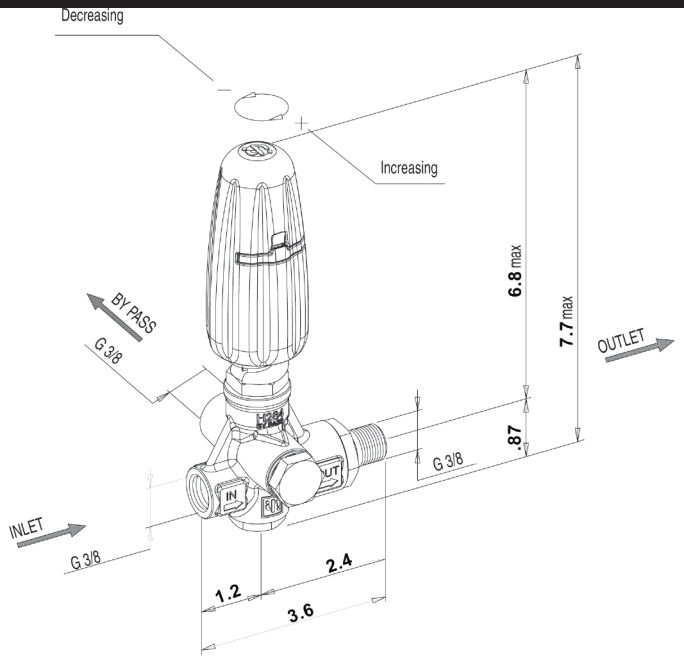

INSTRUCTIONS

In order to obtain a correct pressure adjustmentand a long life of the trapped pressure unloader, the bypass keeps releasing 5% of the total flow rate. The positions mentioned in the following instructions refer to those shown on page 1.

1. Remove yoke (#38) with a screwdriver.
2. Take offf knob (#39).
3. Unscrew the regulation screwt (#4) and the nut (#2) up to the circlip (#1)taking care not to force it.
4. Open the gun, start the system and make sure that all the air is expelled.
5. Open the gun and begin adjusting the pressure by screwing the adjustment ring nut (#3). Alternate the adjusting operations with a few openings and closings of the gun (at least twice), until the desired pressure has been reached. In order to stabilize the various components (seals, springs, etc.), open and close the gun a few times. Check the pressure again and correct if needed.
6. Hold adjustment nut (#3) with a pliers and unscrew nut (#4) up to the end position.
7. Hold the regulation screw (#4) with a pliers and tighten the nut (#2) on it. The required torque is 25 to 28 Nm.
8. Replace knob (#39) and yoke (#38).

In order to obtain working pressure lower than the maximum adjusted pressure, turn knob (#39) counter-clockwise. The minimum adjustable pressure is obtained when the knob has reached its end of stroke. **DO NOT FORCE THE KNOB WHEN IT HAS REACHED THE END OF STROKE.**

SAFETY AND OPERATING INSTRUCTIONS

1. Installation must be done in compliance with the local regulations in the country where the pressure regulator is installed and used.
2. Use clean water only; in the case of water containing solid particle of a size exceeding 15µm, the internal components of pressure regulator will be be subject to quick wear. Furthermore, this might cause situations of danger. Should it be necessary to add detergents to the water, use only neutral, non-aggressive, biodegradable products.
3. Installation and pressure adjustment must be made by qualified and authorized staff only, who must be informed of the operating and safety instructions contained in this document.
4. Never exceed the maximum values of pressure and flow rates stated by the manufacturer.
5. The maximum water temperature must not exceed 140^0F.
6. Use only guns and/or other control devices ensuring a perfect seal. Water leakage will affect the correct functioning of the automatic pressure regulator
7. If the flow-rate at the bypass is close to zero or exceeds the maximum flow-rate by 15% during operation, this could cause failure, early wear and result in situations of danger.
8. In the event that the pressure regulator is installed in a system for hot water generation, it must be placed before the boiler, at such a distance to prevent backflow of steam or very hot water from reaching it.
9. This type of regulator cannot replace the safety valve by any means. If requested by the applicable Regulations, a safety valve must be added to the system.
10. After working and before performing any operation on the system, release the residual pressure by opening the gun for a few seconds. Direct the lance in a way that the jet created by the residual pressure cannot be harmful or dangerous.
11. For the bypass use a tube of limited length and of the same size as the bypass port of the regulator taking care not to form siphons which could include harmful air bubbles.
12. Maintenance and repair must be carried out by qualified and authorized staff only. Use original spare parts only.
13. In case of disposal, do not discard the material into the environment; instead, take it to an authorized disposal center.

GENERAL PUMP 1174 Northland Drive • Mendota Heights, MN 55120
Phone: (651)454-6500 • Fax: (651)454-4524 • e-mail: sales@gpcompanies.com • www.generalpump.com

300659 Rev. A
10-08

GENERAL PUMP