GENERAL PUMP *A member of the Interpump Group*

Flange & Couplers

- Heavy-duty cast aluminum flange and self-adjusting resilient coupling
- Quiet, low maintenance drive system
- Easy to assemble, with all required mounting hardware included
- Compact design





SPECIFICATIONS

PUMP SERIES	MOTOR FRAME	HP RATING	COUPLER PART NUMBER	FLANGE PART NUMBER
63, 44, 53, 58 and 60 Series	NEMA-C Electric 184TC	4 to 8 HP	ZG184TC	ZF184N
50 and 51 Series	NEMA-C Electric 184TC	3 and 5 HP	ZG091	ZF184
47, 48 59 and 66 Series	NEMA-C Electric 213TC, 215TC and 184TC	Up to 15 HP @ 1750 RPM	ZG202	ZF213215
49, 50 and 51 Series	NEMA-C Electric 56C, 145TC and 182TC	1-1/2 and 2 HP	ZG56C (56C) ZG145TC	ZF56145
44, 53, 58, 60 and 63 Series	NEMA-C Electric 213TC and 215TC	5 - 15 HP	ZG202	ZF213215E
47, 48, 59 and 66 Series	IEC90-B14	0.75 - 2.2 KW	Included	101056

ASSEMBLY PROCEDURE

1. Pump and motor shafts should be free of nicks and burrs, coated with a film of anti-seize grease and keys installed.
2. Remove and discard retainer, where applicable.
3. Mount flange on pump, aligning pump shaft key with slot on flange.
4. Mount male half of coupler on pump; shaft end should be flush with coupler end.
5. Apply Loctite 242 to threads of set screw and tighten.
6. Mount female half of coupler on motor; shaft end should be flush with coupler end.
7. Apply Loctite 242 to threads of set screw and tighten.
8. Mount pump-flange assembly to motor. Pump must be in horizontal position for proper lubrication.
9. After assembly, observe coupler position through slot in flange. There should be about 1/8” space between coupler halves.

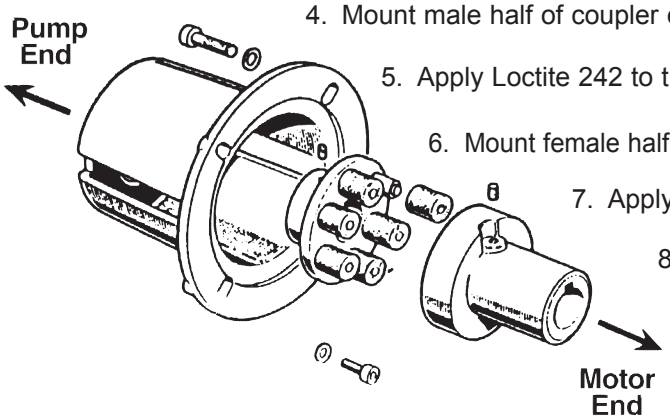

DIMENSIONS

ZF213215E

ZF213215E

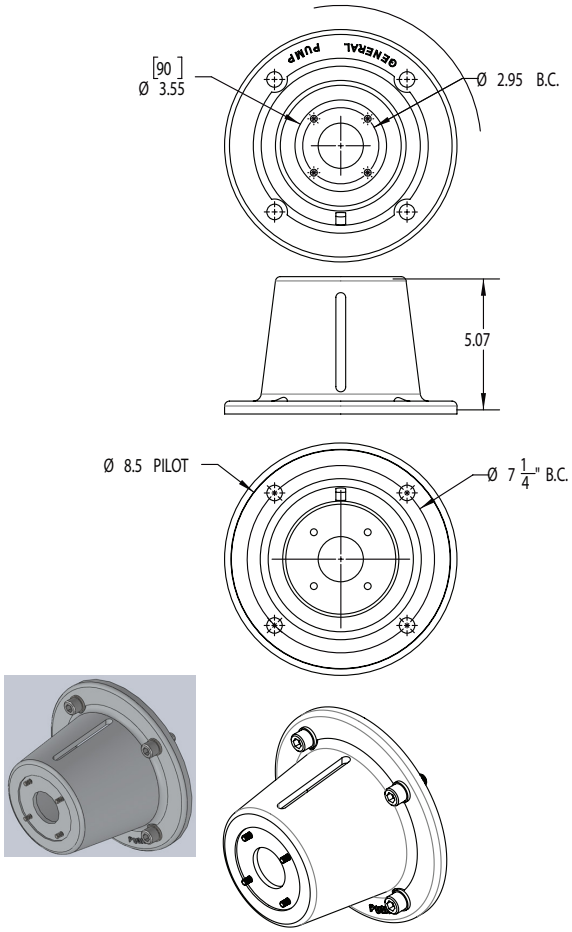

ZF213215

ZF213215 (500008 FLANGE)

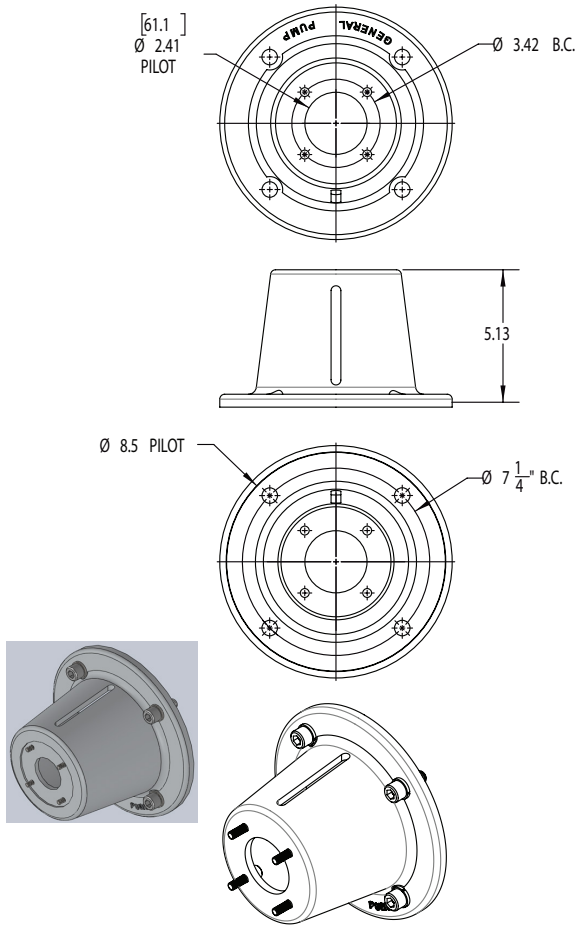

ZG202

ZG202

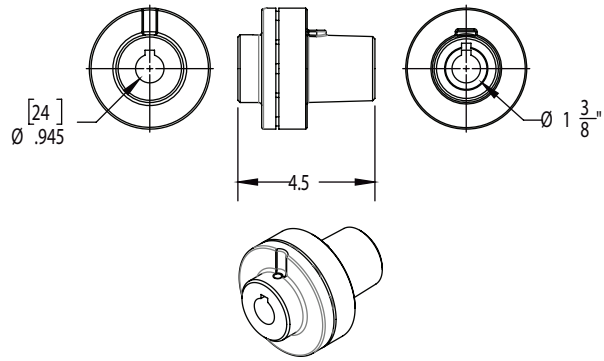

Ref 300130 Rev. F
09-19

GENERAL PUMP

DIMENSIONS

ZF184N

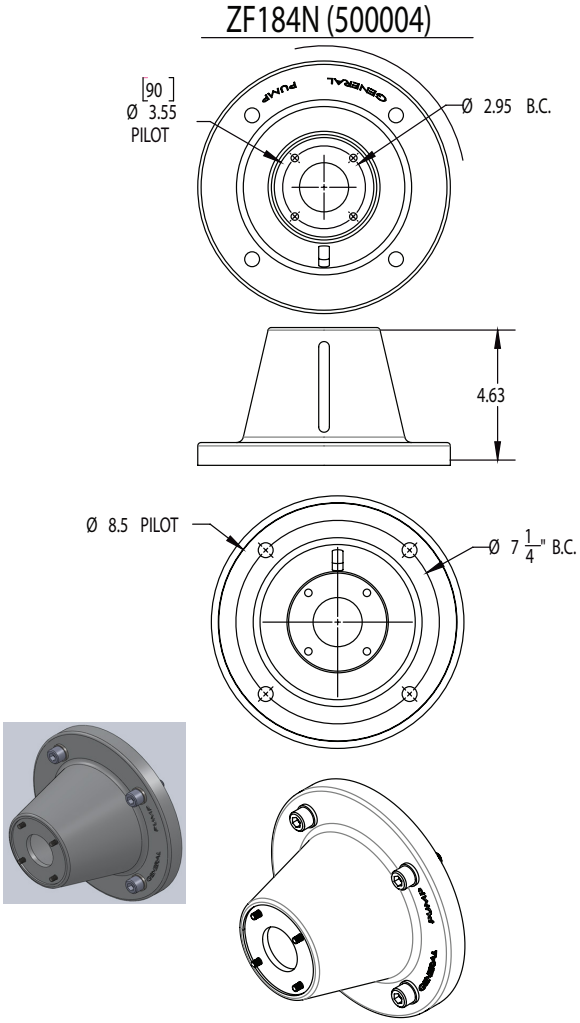

ZF184

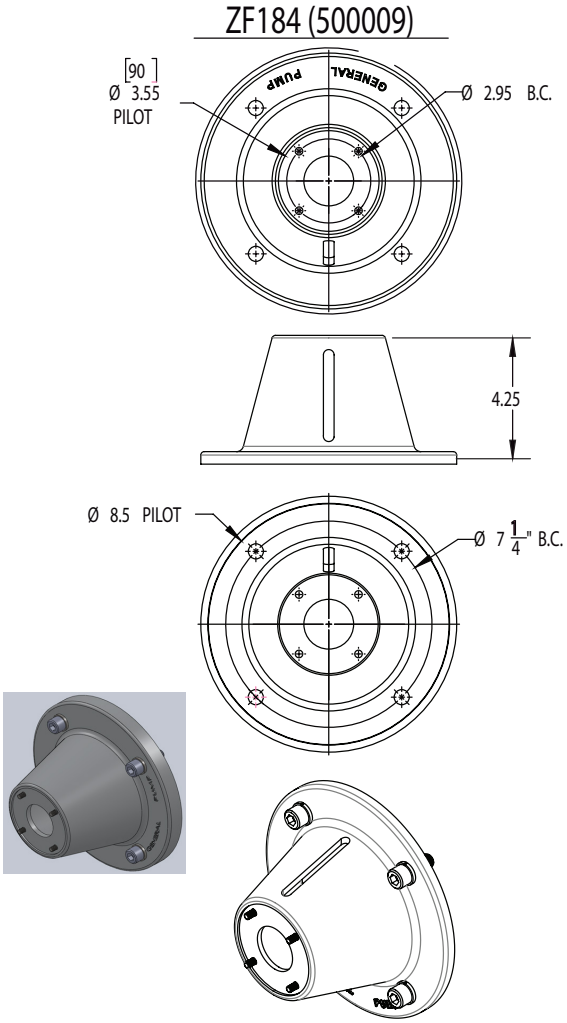

ZG184TC

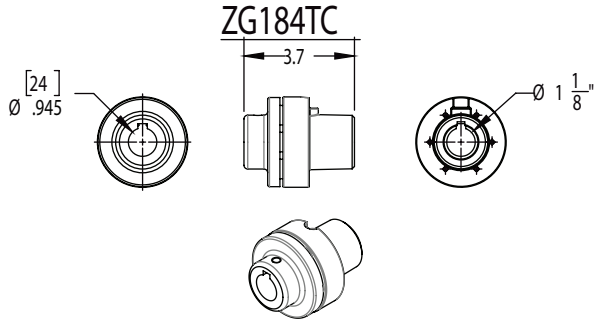

DIMENSIONS

ZF56145

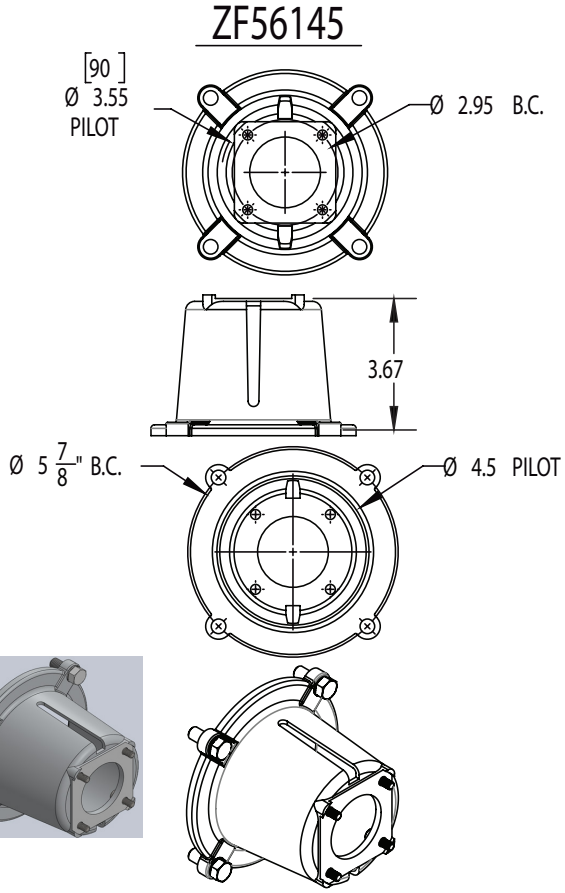

101056

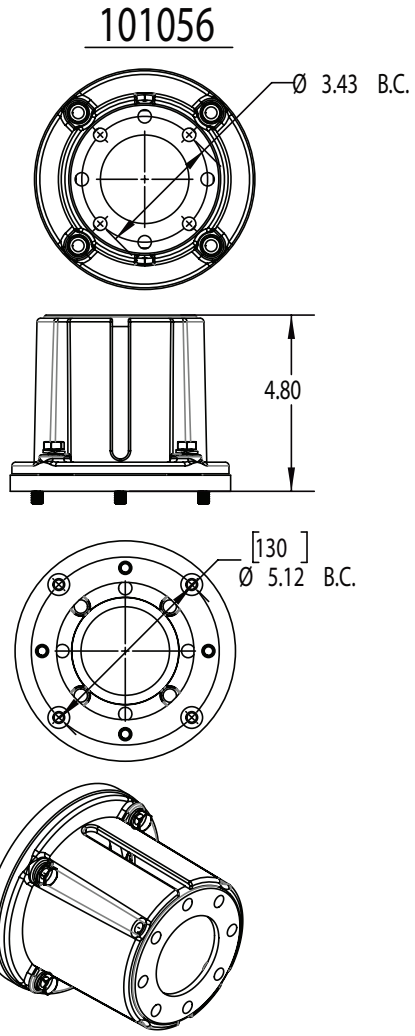

ZG184TC / ZG56C

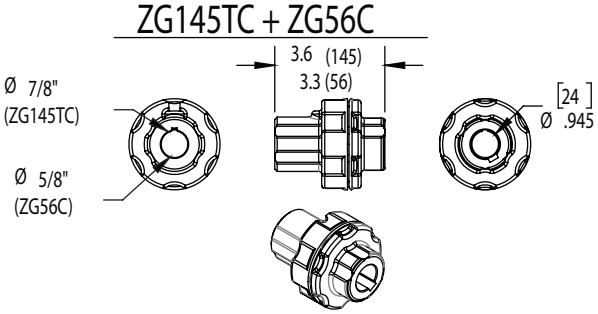

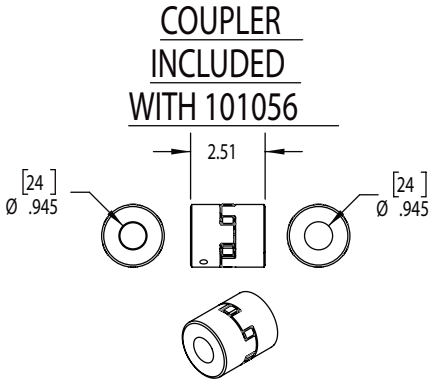

GENERAL PUMP 1174 Northland Drive • Mendota Heights, MN 55120
Phone: 651.686.2199 • Fax: 800.535.1745 • e-mail: sales@gpcompanies.com • www.generalpump.com