GENERAL PUMP *A member of the Interpump Group*

Flange & Couplers

FEATURES

- Heavy-duty cast aluminum flange and self-adjusting resilient coupling
- Quiet, low maintenance drive system
- Easy to assemble, with all required mounting hardware included
- Compact design



SPECIFICATIONS

PUMP SERIES	MOTOR FRAME	HP RATING	COUPLER PART NUMBER	FLANGE PART NUMBER
63 and 44 Series	NEMA-C Electric 184TC	4 to 8 HP	ZG184TC	ZF184N
50 Series	NEMA-C Electric 184TC	3 and 5 HP	ZG091	ZF184
47 and 48 Series	NEMA-C Electric 213TC, 215TC and 184TC	Up to 15 HP @ 1750 RPM	ZG202	ZF213215
49 and 50 Series	NEMA-C Electric 56C, 145TC and 182TC	1-1/2 and 2 HP	ZG56C (56C) ZG145TC	ZF56145
	Gas Engine	8 to 11 HP	ZGL100	ZF811
TT/TP 51 Series	Gas Engine	3-1/2 to 8 HP	ZG56C	ZFWWS
TT/TP 51 Series	NEMA-C Electric 56C	3-1/2 to 8 HP	ZG56C	ZFWWU

ASSEMBLY PROCEDURE

1. Pump and motor shafts should be free of nicks and burrs, coated with a film of anti-seize grease and keys installed.
2. Remove and discard retainer.
3. Mount flange on pump, aligning pump shaft key with slot on flange.

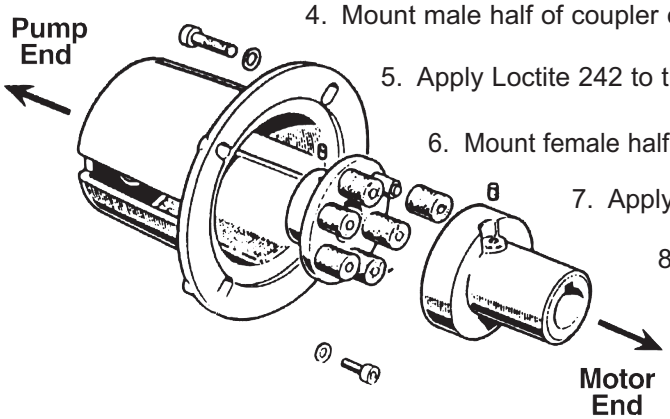

4. Mount male half of coupler on pump; shaft end should be flush with coupler end.
5. Apply Loctite 242 to threads of set screw and tighten.
6. Mount female half of coupler on motor; shaft end should be flush with coupler end.
7. Apply Loctite 242 to threads of set screw and tighten.
8. Mount pump-flange assembly to motor. Pump must be in horizontal position for proper lubrication.
9. After assembly, observe coupler position through slot in flange. There should be about 1/8” space between coupler halves.

DRIVE COMPONENTS

Flange/Coupler

GENERAL PUMP *A member of the Interpump Group*

DIMENSIONS

ZF184

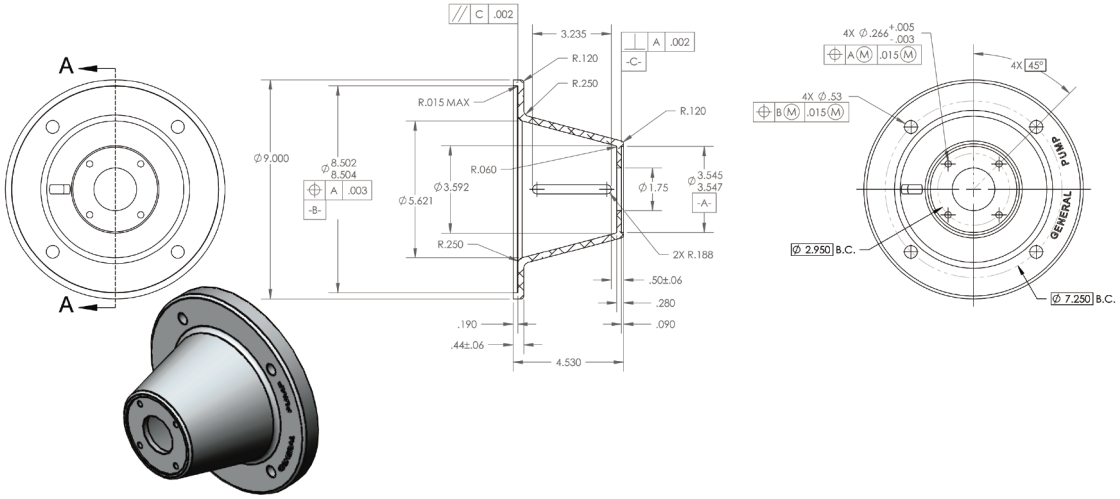

ZF213215

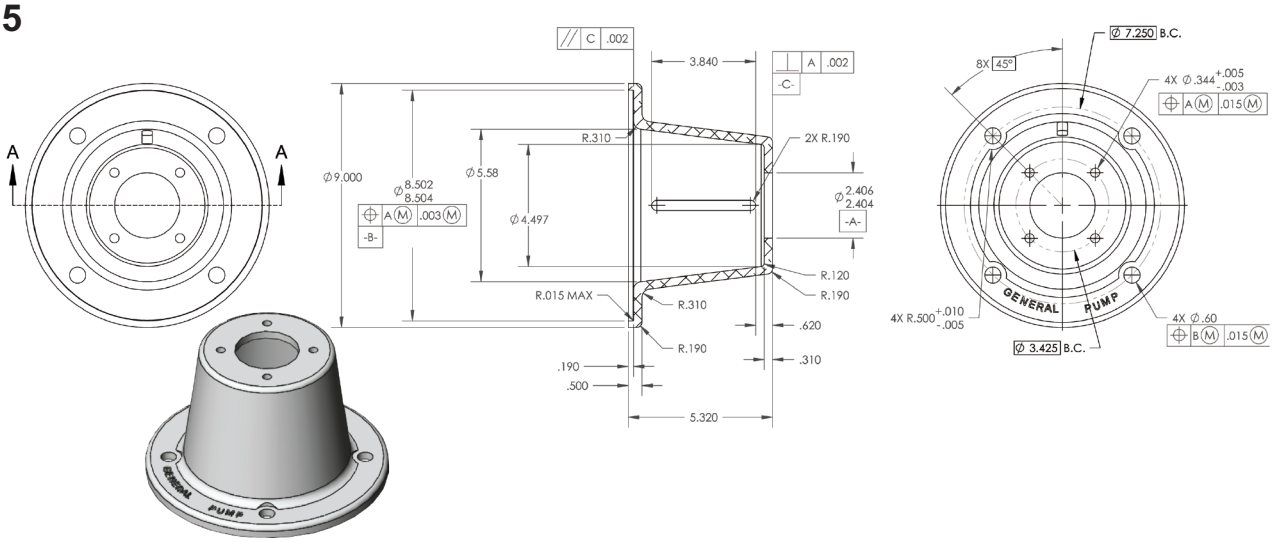

ZF184N



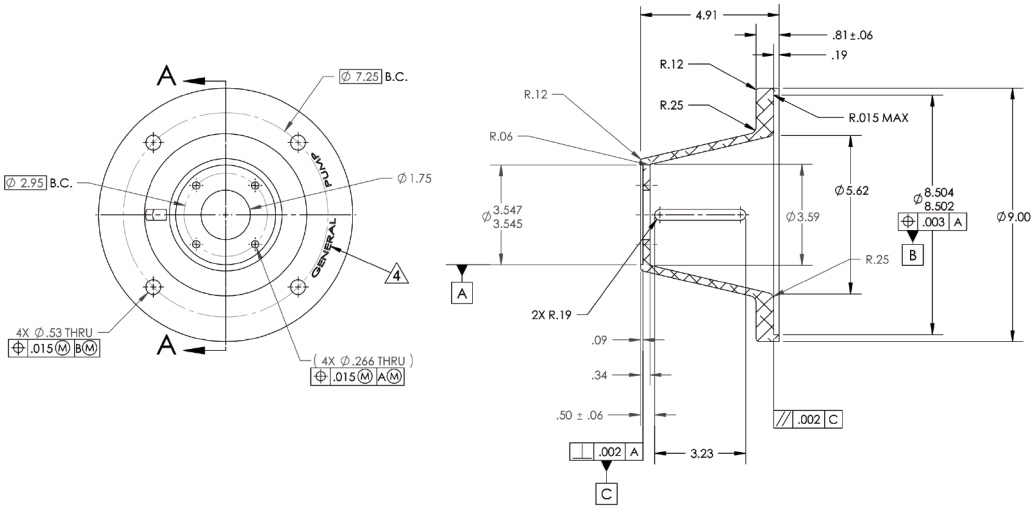

Ref 300130 Rev. D
08-14

GENERAL PUMP 1174 Northland Drive • Mendota Heights, MN 55120
Phone: 651.686.2199 • Fax: 800.535.1745 • e-mail: sales@gpcompanies.com • www.generalpump.com

GENERAL PUMP