ZETA-PP 70

3-Cylinder, Low-Pressure Diaphragm Pumps



ZETA-PP 70 low pressure 3-cylinder diaphragm pumps have anodized aluminum bodies with polypropylene heads & manifolds, and stainless steel valves. A control valve with pressure gauge is standard on all models.

ZETA-PP pumps are excellent for soft wash as well as various horticultural and agricultural spraying applications.

Model	GPM	l/min	PSI	bar	RPM	Drive Configuration	Weight
ZETA-PP 70 VA	19.0	71.0	300	20	550	Universal VA Drive Face.	24.3 LBS
ZETA-PP 70 VAGR3/4	19.0	71.0	300	20	550	Gear Reduction for 3/4" Shaft Gas Engine, 4-6.5 HP	31.3 LBS
ZETA-PP 70 MI1	19.0	71.0	300	20	550	2-Bolt, A-Flange, 1" Hollow Shaft for Hydraulic Motor	24.3 LBS

Specifications	ZETA-PP 70
Inlet Port	1-1/4" Hose Barb
Outlet Ports - Valve	(2) 1/2" Hose Barb
Bypass	3/4" Hose Barb
Piston Diameter	55.0mm
Crankshaft Stroke/Code	
Dims. - Pump Only	11"L x 11"W x 12"H
- GR Version	16"L x 11"W x 12"H

Lubrication: Requires 20 oz. of Udor Lube 40W Premium Pump Oil.
Alternate Oil: 30W non-detergent or 15W-40 non-detergent oil.

Description	Part #
Diaphragm Kit - GREENTECH	6710.02
Diaphragm Bolt & Washer Kit	6640.02
Valve Kit	6930.05

UDOR® USA
World Leader in Diaphragm and Plunger Pumps

6180 140th Avenue NW
Ramsey, MN 55303

Ph: 651-785-0666
Fax: 800-732-2670

www.udorusa.com
sales@udorusa.com

Scan this QR Code for More Information

ZETA-PP 70 MI1

Maximum Flow	19.0 GPM / 71.0 lpm
Maximum Pressure	300 PSI / 20 bar
Maximum RPM	550 RPM
Inlet Port - Hose Barb	1-1/4" HB
Outlet Ports - Hose Barb, Valve	(2) 1/2" HB
Bypass - Hose Barb	3/4" HB
Dimensions	11"L x 11"W x 12"H
Weight	24.3 lbs

Lubrication: Requires 20 oz. of Udor Lube 40W Premium Pump Oil.
Alternate Oil: 30W non-detergent or 15W-40 non-detergent oil.

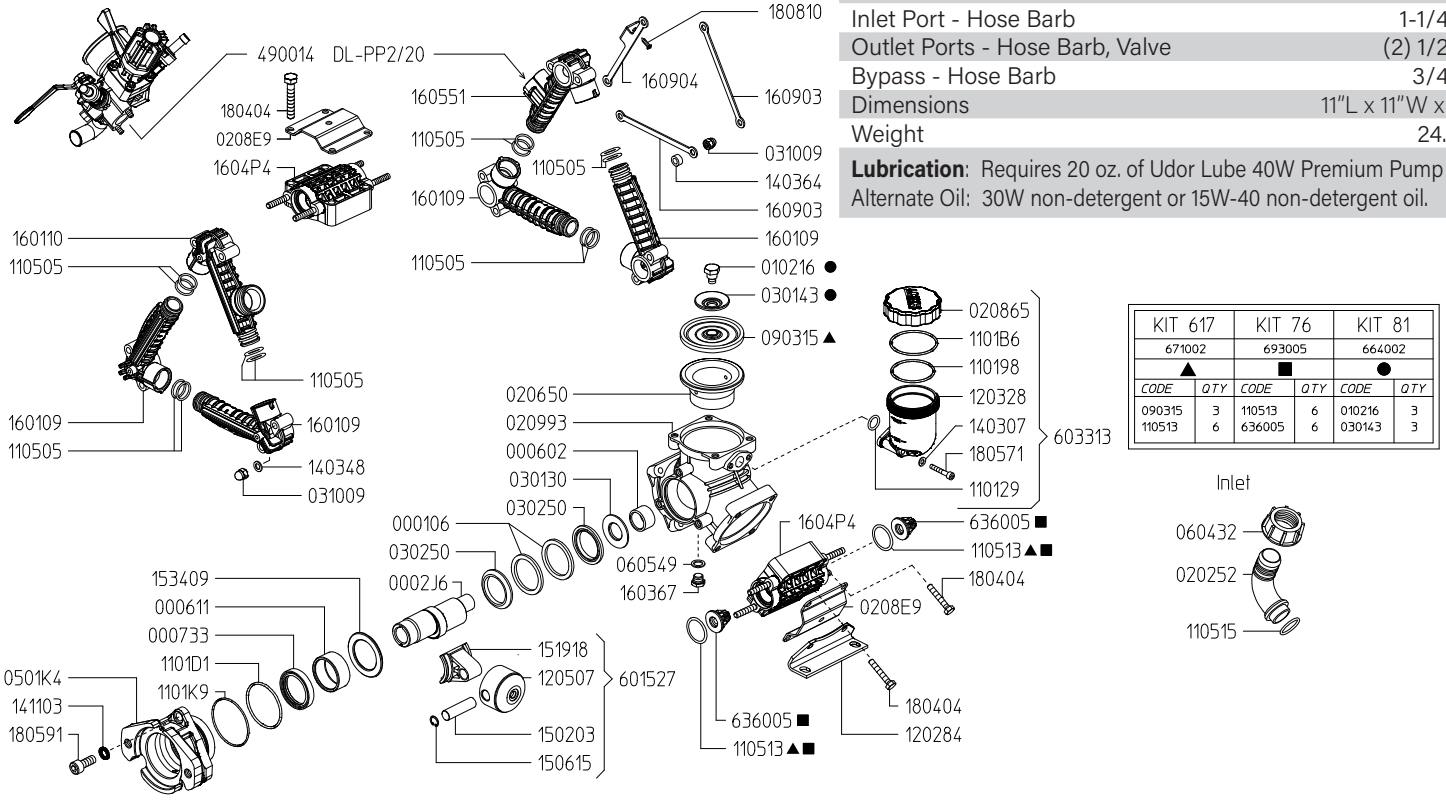

KIT 617		KIT 76		KIT 81	
671002		693005		664002	
▲		■		●	
CODE	QTY	CODE	QTY	CODE	QTY
090315	3	110513	6	010216	3
110513	6	636005	6	030143	3

Revised 9-18-2026

Part #	Description	Qty
0001.06	RETAINER RING	2
0002.J6	CRANKSHAFT – ZETA-PP MI	1
0006.02	BUSHING D25	1
0006.11	BUSHING D40	1
0007.33	OIL SEAL	1
0102.16	DIAPHRAGM BOLT ●	3
0202.52	INLET HOSE BARB ELBOW	1
0206.50	SLEEVE	3
0208.65	OIL RESERVOIR COVER	1
0208.E9	REINFORCING PLATE	3
0209.93	CRANKCASE	1
0301.43	DIAPHRAGM WASHER ●	3
0302.50	ROD SPACER	2
0310.09	NUT	12
0501.K4	FLANGE – ZETA-PP MI	1
0604.32	NUT – INLET BARB	1
0605.49	GASKET	1
0903.15	DIAPHRAGM▲	3
1101.29	O-RING, OIL RESERVOIR	1
1101.98	O-RING, OIL RESERVOIR COVER, INNER	1
1101.B6	O-RING, OIL RESERVOIR COVER, OUTER	1
1101.D1	O-RING	1
1101.K9	O-RING	1
1105.05	O-RING	12
1105.13	O-RING, VALVE ▲ ■	6
1105.15	O-RING – INLET BARB	1
1202.84	PUMP MOUNTING RAIL	2
1203.28	OIL RESERVOIR	1
1205.07	PISTON	3

Part #	Description	Qty
1403.07	WASHER	2
1403.48	WASHER	6
1403.64	SPACER	6
1411.03	WASHER	3
1502.03	PIN	3
1506.15	SNAP RING	3
1519.18	CONNECTING ROD	3
1534.09	SPACER	1
1601.09	MANIFOLD TUBE	4
1601.10	MANIFOLD TUBE	1
1603.67	PLUG	1
1604.P4	HEAD	3
1605.51	MANIFOLD TUBE	1
1609.03	TUBE BRACE	2
1609.04	TUBE BRACE	1
1804.04	HEX BOLT	12
1805.71	ALLEN BOLT	2
1805.91	ALLEN BOLT	3
1808.10	SCREW	1
4900.14	DL-PP2/20 REGULATOR	1
6015.27	CONNECTING ROD ASS'Y	3
6033.13	OIL RESERVOIR – COMPLETE	1
6360.05	VALVE ASS'Y W/O O-RING ■	6
6640.02	DIAPHRAGM BOLT & WASHER (81)	1
6710.02	DIAPHRAGM KIT GREENTECH (KIT 617)	1
6930.05	IN/OUTLET VALVE KIT (KIT 76)	1

● Parts in 6640.02 (Kit 81)
▲ Parts in 6710.02 (Kit 617)
■ Parts in 6930.05 (Kit 76)

DL-PP 4900.14

Adjustable Pressure Regulator

Maximum Flow	27.0 GPM / 102 lpm
Maximum Pressure	350 PSI / 24 bar
Inlet Port - Hose Barb	-
Outlet Ports - Hose Barb, Valve	(2) 1/2" HB
Bypass - Hose Barb	3/4" HB

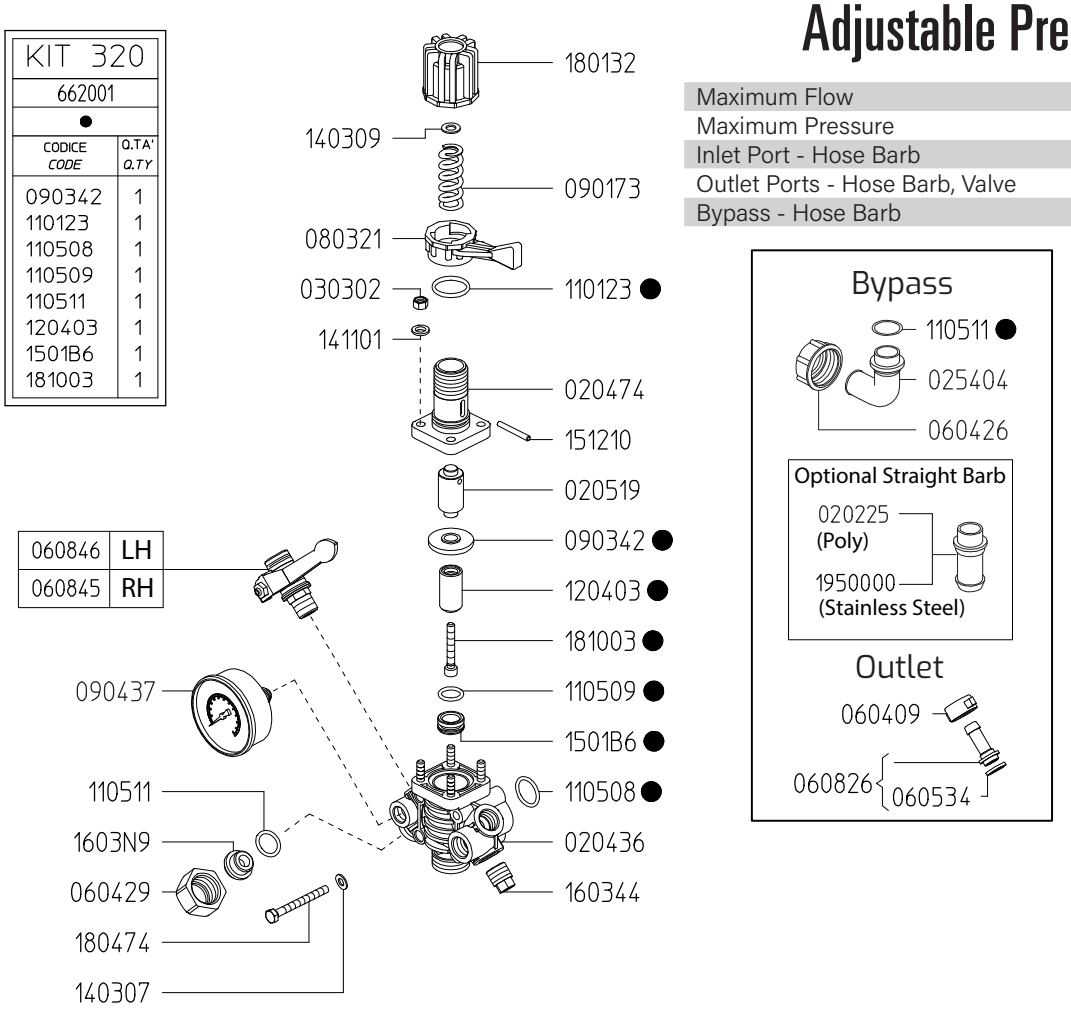

Revised 5-12-2026

Part #	Description	Qty
0202.25	BYPASS HOSE BARB - STRAIGHT (OPTIONAL)	1
0204.36	CONTROL BODY "DL-PP" - GREEN	1
0204.74	BODY	1
0205.19	CYLINDER	1
0254.04	BYPASS HOSE BARB - ELBOW	1
0303.02	NUT	4
0604.09	BARB NUT	2
0604.26	BYPASS BARB NUT	1
0604.29	BRASS NUT G3/4	1
0605.34	GASKET	2
0608.26	1/2" HOSE BARB W/GASKET	2
0608.45	BALL VALVE RIGHT	1
0608.46	BALL VALVE LEFT	1
0803.21	LEVER	1
0901.73	PRESS.SPRING "DL/20"	1
0903.42	DIAPHRAGM – BUNA ●	1
0904.37	PRESSURE GAUGE (20BAR)	1
1101.23	O-RING ●	1

Part #	Description	Qty
1105.08	O-RING ●	1
1105.09	O-RING D15,08 ●	1
1105.11	O-RING D17,12 ●	1
1204.03	POPPET ●	1
1403.07	WASHER	2
1403.09	WASHER D10,5	1
1411.01	SERRATED WASHER D6	4
1501.B6	SEAT "DL" D14 ●	1
1512.10	PIN	1
1603.44	PLUG G3/8	1
1603.N9	PLUG	1
1801.32	ADJUSTABLE KNOB "DL"	1
1804.74	BOLT	2
1810.03	STAINLESS STEEL BOLT ●	1
6620.01	KIT 320 - REPAIR KIT, DL-PP	-
19500.00	BYPASS HOSE BARB - STRAIGHT, SS (OPTIONAL)	1

● Parts in 6620.01 (KIT 320)

The control unit features a manual dump valve, pressure control knob, glycerine filled pressure gauge, and two ball valve discharge ports.

1. Before operating or re-operating the pump move lever (0803.21) to the dump position (Right) so the pump will start at zero pressure. (Failure to do so will void the pump warranty.)
2. Turn pressure adjustment knob (1801.32) counter clockwise to relieve spring tension. This step only applies to the initial start up and is not necessary in daily operation of pump.
3. Start unit and let run until air is evacuated from the system.
4. Move lever (0803.21) to the pressure position (Left) open spray gun or spray boom and turn the pressure adjustment knob (1801.32) clockwise until desired operating pressure is achieved.

ZETA-PP DIMENSIONS

All Dimensions are WITHOUT Control Unit or Regulator

Dimensional Drawings are Shown in Millimeters. To Convert to Inches, Multiply Dimension x 0.03937

Specifications	ZETA-PP 70
Inlet Port - Hose Barb	1-1/4" HB
Outlet Port - Hose Barb	3/4" HB
Dimensions	11"L x 11"W x 12"H
Diaphragm Material	GREENTECH (Std) Buna-N (Opt)

Lubrication: Requires 20 oz. of Udor Lube 40W Premium Pump Oil. Alternate Oil: 30W non-detergent or 15W-40 non-detergent oil.

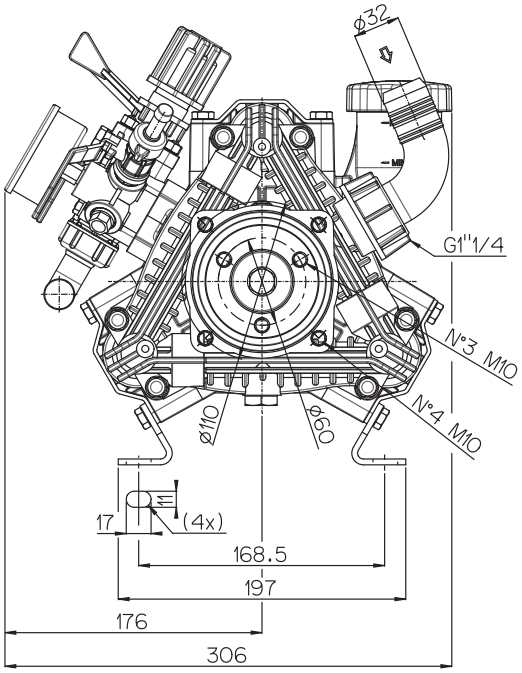

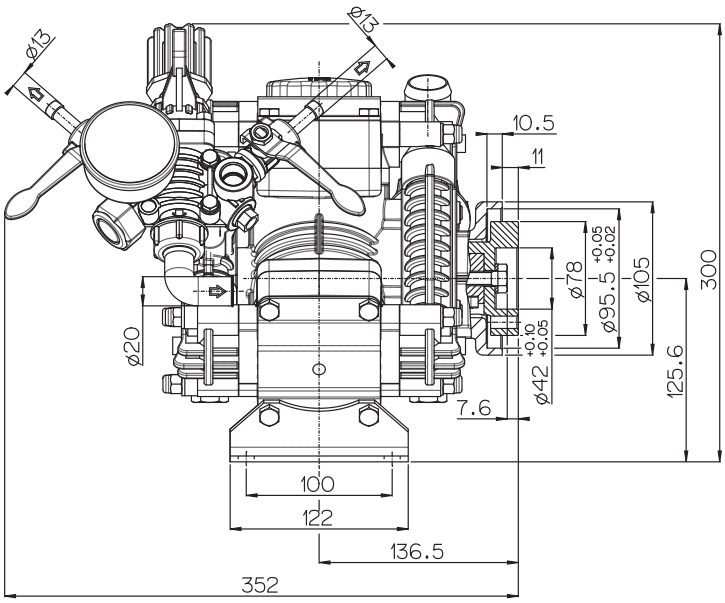

TORQUE SPECS

Ref.	Description	Ft./lb.	Nm
1	**Diaphragm Bolts** (Use Loctite 243)	18	25
2	**Head Bolts**	18	25
3	**Pulsation Dampener Bolts**	18	25
4	**Oil Cup Bolts**	6	8
5	**Manifold Bolts (Plastic)**	7	10

