# ZETA 140

## 3-Cylinder, Low-Pressure Diaphragm Pumps



**ZETA 140** low pressure 3-cylinder diaphragm pumps have anodized aluminum bodies with plasticized aluminum heads, stainless steel valves and glass-filled nylon manifolds.

**ZETA 140** pumps are excellent for various horticultural and agricultural spraying applications.

Pumps are available with a 1-3/8" Male PTO shaft or 1-3/8" Male PTO x 25mm solid, keyed thru-shaft..

| Model | GPM | l/min | PSI | bar | RPM | Drive Configuration | Weight |
|---|---|---|---|---|---|---|---|
| **ZETA 140 VA** | 36.0 | 135 | 300 | 20 | 550 | Universal VA Drive Face. | 45 LBS |
| **ZETA 140 1C** | 36.0 | 135 | 300 | 20 | 550 | 1-3/8" 6-Spline Male PTO Shaft | 45 LBS |
| **ZETA 140 TS1C** | 36.0 | 135 | 300 | 20 | 550 | 1-3/8" 6-Spline Male PTO x 25mm Solid Keyed Thru-Shaft | 45 LBS |

| Specifications | ZETA 140 |
|---|---|
| Inlet Port | 1-1/2" Hose Barb |
| Outlet Ports - Valve | 3/4" Hose Barb |
| Piston Diameter | 60.0mm |
| Crankshaft Stroke/Code | 18.0mm / A |
| Dims. - Pump Only | 12.5"L x 13.5"W x 12.5"H |

**Lubrication**: Requires 40 oz. of Udor Lube 40W Premium Pump Oil.
Alternate Oil: 30W non-detergent or 15W-40 non-detergent oil.

| Description | Part # |
|---|---|
| Diaphragm Kit (GREENTECH) | 6062.H2 |
| Diaphragm Bolt & Washer Kit | 6062.16 |
| Valve Kit | 6062.D7 |
| Complete Repair Kit | 8700.04CK |


UDOR® USA

*World Leader in Diaphragm and Plunger Pumps*

6180 140th Avenue NW
Ramsey, MN 55303

Ph: 651-785-0666
Fax: 800-732-2670

www.udorusa.com
sales@udorusa.com


Scan this QR Code for More Information

# ZETA 140 TS1C

| 606216 KIT 515 ● | | 6062D7 KIT 640 ■ | | 6062H2 KIT 670 ◆ | | 8700.04CK ▲ | |
|---|---|---|---|---|---|---|---|
| CODE | QTY | CODE | QTY | CODE | QTY | CODE | QTY |
| 010201 | 3 | 110101 | 6 | 090314 | 1 | 010201 | 3 |
| 030107 | 3 | 600677 | 6 | 090361 | 3 | 030107 | 3 |
| | | | | 110101 | 6 | 090314 | 1 |
| | | | | | | 090361 | 3 |
| | | | | | | 110101 | 6 |
| | | | | | | 110104 | 1 |
| | | | | | | 110142 | 1 |
| | | | | | | 600677 | 6 |

| | |
|---|---|
| Maximum Flow | 36.0 GPM / 135 lpm |
| Maximum Pressure | 300 PSI / 20 bar |
| Maximum RPM | 550 RPM |
| Inlet Port - Hose Barb | 1-1/2" HB |
| Outlet Port - Hose Barb | 3/4" HB |
| Bypass - Hose Barb | - |
| Dimensions | 13"L x 11"W x 12"H |
| Weight | 45 lbs |

**Lubrication**: Requires 40 oz. of Udor Lube 40W Premium Pump Oil.
Alternate Oil: 30W non-detergent or 15W-40 non-detergent oil.

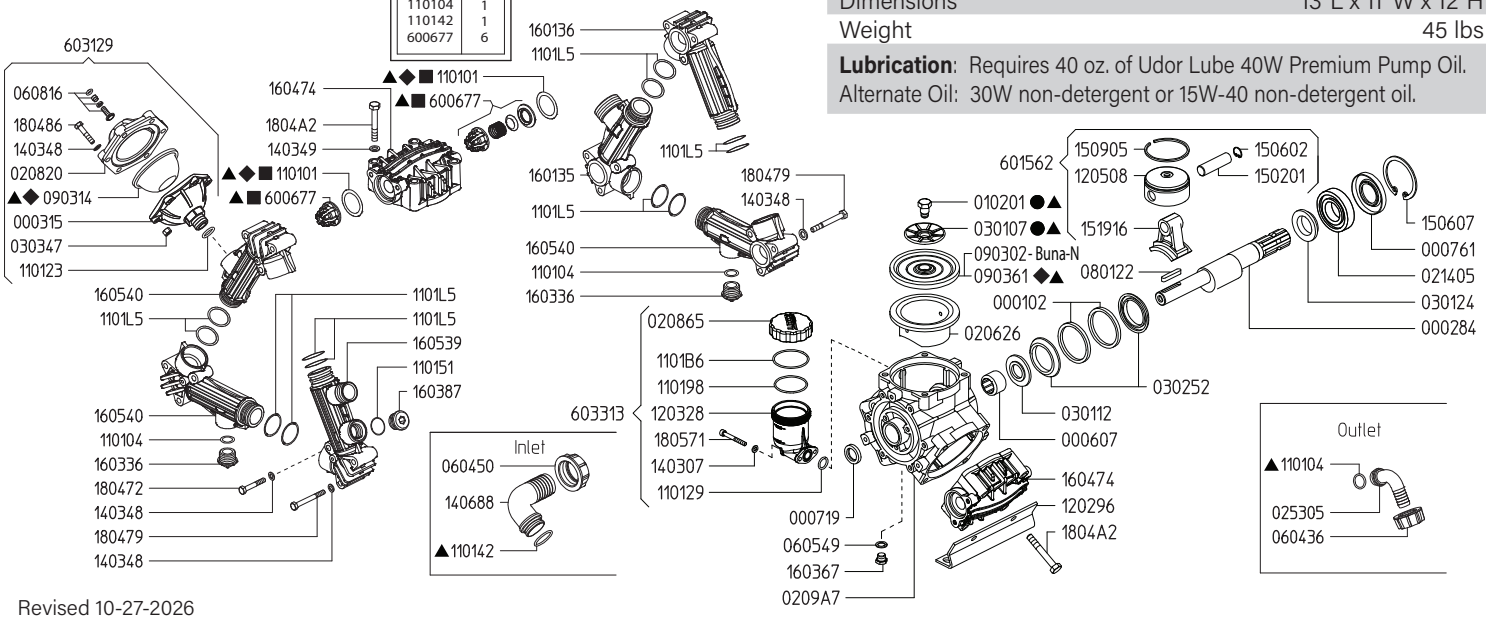


Revised 10-27-2026

| Part # | Description | Qty |
|---|---|---|
| 0001.02 | RETAINER RING | 2 |
| 0002.84 | CRANKSHAFT - TS1C | 1 |
| 0003.15 | ACCUMULATOR BASE | 1 |
| 0006.07 | BEARING D25 | 1 |
| 0007.19 | OIL SEAL D25 | 1 |
| 0007.61 | OIL SEAL D35 | 1 |
| 0102.01 | DIAPHRAGM BOLT ●▲ | 3 |
| 0206.26 | SLEEVE D75 | 3 |
| 0208.20 | ACCUMULATOR COVER | 1 |
| 0208.65 | OIL RESERVIOR CAP | 1 |
| 0209.A7 | CRANKCASE | 1 |
| 0214.05 | BALL BEARING D35 | 1 |
| 0253.05 | HOSE BARB D20 | 1 |
| 0301.07 | DIAPHRAGM WASHER ●▲ | 3 |
| 0301.12 | BEARING DISC - D25 | 1 |
| 0301.24 | BEARING DISC - D35 | 1 |
| 0302.52 | ROD SPACER | 2 |
| 0303.47 | HEX NUT M8X8 | 6 |
| 0604.36 | BARB NUT G1" | 1 |
| 0604.50 | BARB NUT G1-1/2" | 1 |
| 0605.49 | GASKET D13 | 1 |
| 0608.16 | AIR VALVE ASSEMBLY | 1 |
| 0801.22 | KEY A8X7X45 UNI6604-69 | 1 |
| 0903.02 | PISTON DIAPHRAGM - BUNA-N 116MM | 3 |
| 0903.14 | ACCUMULATOR DIAPHRAGM ◆▲ | 1 |
| 0903.61 | PISTON DIAPHRAGM - GREENTECH 116MM ◆▲ | 3 |
| 1101.01 | O-RING - VALVE ■◆▲ | 6 |
| 1101.04 | O-RING - DISCHARGE BARB | 3 |
| 1101.23 | O-RING - ACCUMULATOR | 1 |
| 1101.29 | O-RING - OIL RESERVIOR | 1 |
| 1101.42 | O-RING - INLET BARB | 1 |
| 1101.51 | O-RING - PLUG | 1 |
| 1101.98 | O-RING - OIL RESERVIOR | 1 |
| 1101.B6 | O-RING - OIL RESERVIOR | 1 |
| 1101.L5 | O-RING - MANIFOLD TUBES | 12 |
| 1202.96 | RAIL | 2 |
| 1203.28 | OIL RESERVIOR | 1 |

| Part # | Description | Qty |
|---|---|---|
| 1205.08 | ALUMINIUN PISTON D75 | 3 |
| 1403.07 | WASHER M6 | 2 |
| 1403.48 | WASHER M8 | 24 |
| 1403.49 | WASHER M10 | 8 |
| 1406.88 | HOSE BARB - SUCTION 1-1/2" | 1 |
| 1502.01 | PIN D18X64 | 3 |
| 1506.02 | SNAP RING D18 | 3 |
| 1506.07 | SNAP RING D72 | 1 |
| 1509.05 | PISTON RING D75 | 3 |
| 1519.16 | CONNECTING ROD | 3 |
| 1601.35 | SUCTION MANIFOLD G1"1/2 M | 1 |
| 1601.36 | INLET-OUTLET MANIFOLD | 1 |
| 1603.36 | PLUG G3/4 | 2 |
| 1603.67 | PLUG G1/4 | 1 |
| 1603.87 | PLUG G3/4 | 1 |
| 1604.74 | HEAD | 3 |
| 1605.39 | MANIFOLD G1" M - G3/4 F | 1 |
| 1605.40 | INLET-OUTLET MANIFOLD G3/4 F | 3 |
| 1804.72 | HEX BOLT M8X50 | 6 |
| 1804.79 | HEX BOLT M8X70 | 12 |
| 1804.86 | HEX BOLT M8X40 | 6 |
| 1804.A2 | HEX BOLT M10X75 | 12 |
| 1805.71 | ALLEN BOLT M6X50 | 2 |
| 6006.77 | VALVE ASSEMBLY W/O O-RING ■▲ | 6 |
| 6015.62 | ROD ASSEMBLY - D75 PISTON | 3 |
| 6031.29 | ACCUMULATOR ASSEMBLY | 1 |
| 6033.13 | OIL RESERVOIR ASSEMBLY | 1 |
| 6062.16 | DIAPHRAGM BOLT & WASHER (KIT 515) | 1 |
| 6062.D7 | IN/OUTLET VALVE KIT (KIT 640) | 1 |
| 6062.H2 | DIAPHRAGM KIT - GREENTECH (KIT 670) | 1 |
| 8700.04CK | COMPLETE REPAIR KIT | 1 |

- ● Parts in 6062.16 (Kit 515)
- ■ Parts in 6062.D7 (Kit 640)
- ◆ Parts in 6062.H2 (Kit 670)
- ▲ Parts in 8700.04CK

# ZETA 120/140 DIMENSIONS

***All Dimensions are WITHOUT Control Unit or Regulator***

***Dimensional Drawings are Shown in Millimeters. To Convert to Inches, Multiply Dimension x 0.03937***

| Specifications | ZETA 120 | ZETA 140 |
|---|---|---|
| Inlet Port - Hose Barb | 1-1/2" HB | 1-1/2" HB |
| Outlet Ports - Hose Barb | 3/4" HB | 3/4" HB |
| Dimensions - Pump Only | 12.5"L x 13.5"W x 12.5"H | |
| Diaphragm Material | GREENTECH (Std) Buna-N (Opt) | |

**Lubrication**: Requires 39 oz. of Udor Lube 40W Premium Pump Oil.
Alternate Oil: 30W non-detergent or 15W-40 non-detergent oil.

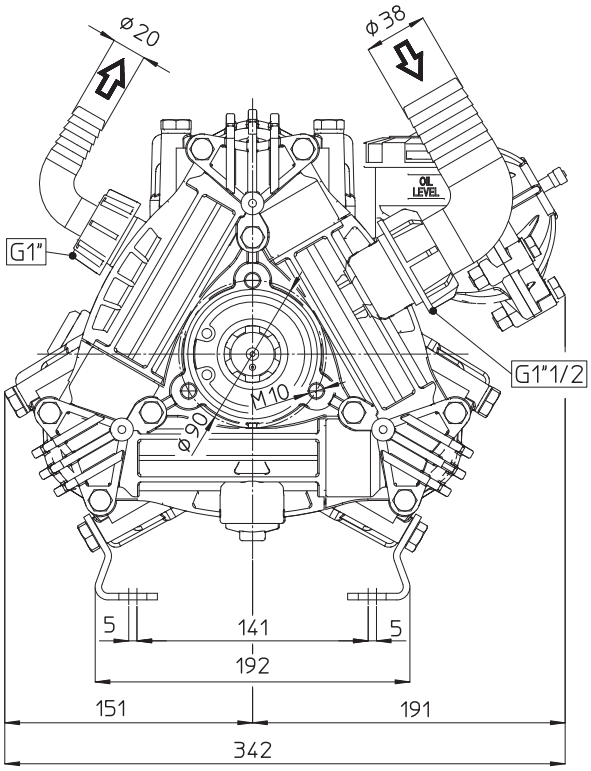


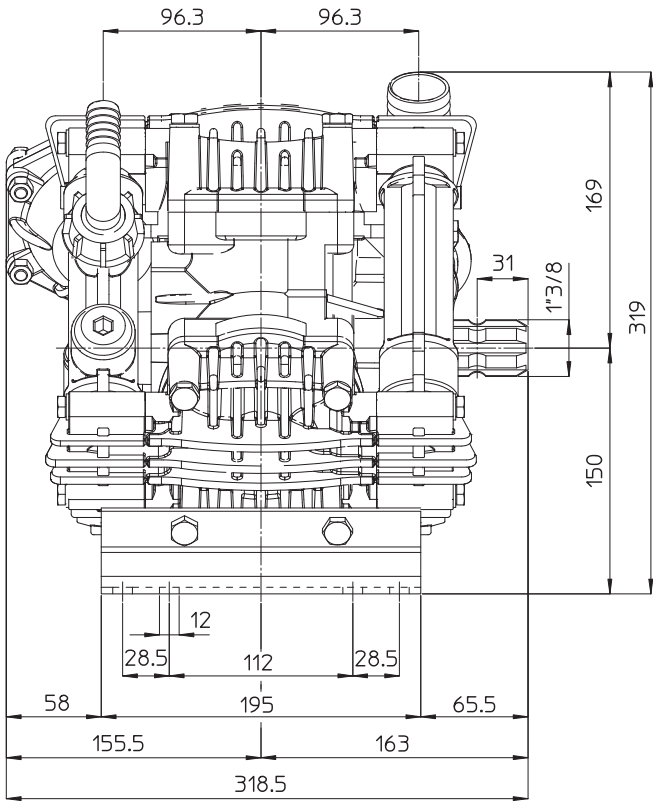


## TORQUE SPECS

| Ref. | Description | Ft./lb. | Nm |
|---|---|---|---|
| 1 | **Diaphragm Bolts** (Use Loctite 243) | 22 | 30 |
| 2 | **Head Bolts** | 30 | 40 |
| 3 | **Pulsation Dampener Bolts** | 18 | 25 |
| 4 | **Oil Cup Bolts** | 6 | 8 |
| 5 | **Manifold Bolts (Plastic)** | 14 | 20 |

