ZETA 100 DIMENSIONS

All Dimensions are WITHOUT Control Unit or Regulator

Dimensional Drawings are Shown in Millimeters. To Convert to Inches, Multiply Dimension x 0.03937

Specifications	ZETA 100
Inlet Port - Hose Barb	1-1/4" HB
Outlet Port - Hose Barb	3/4" HB
Dimensions	10.5"L x 10"W x 9"H
Diaphragm Material	GREENTECH (Std) Buna-N (Opt)

Lubrication: Requires 39 oz. of Udor Lube 40W Premium Pump Oil. Alternate Oil: 30W non-detergent or 15W-40 non-detergent oil.

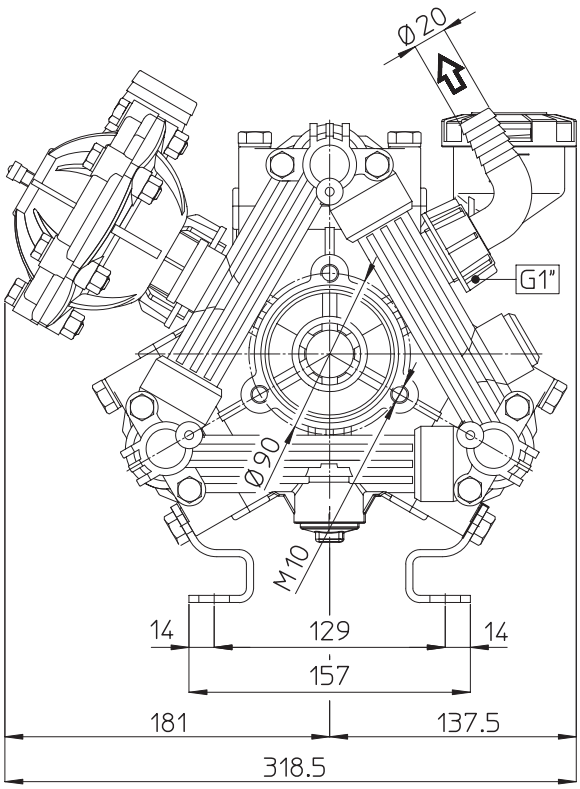

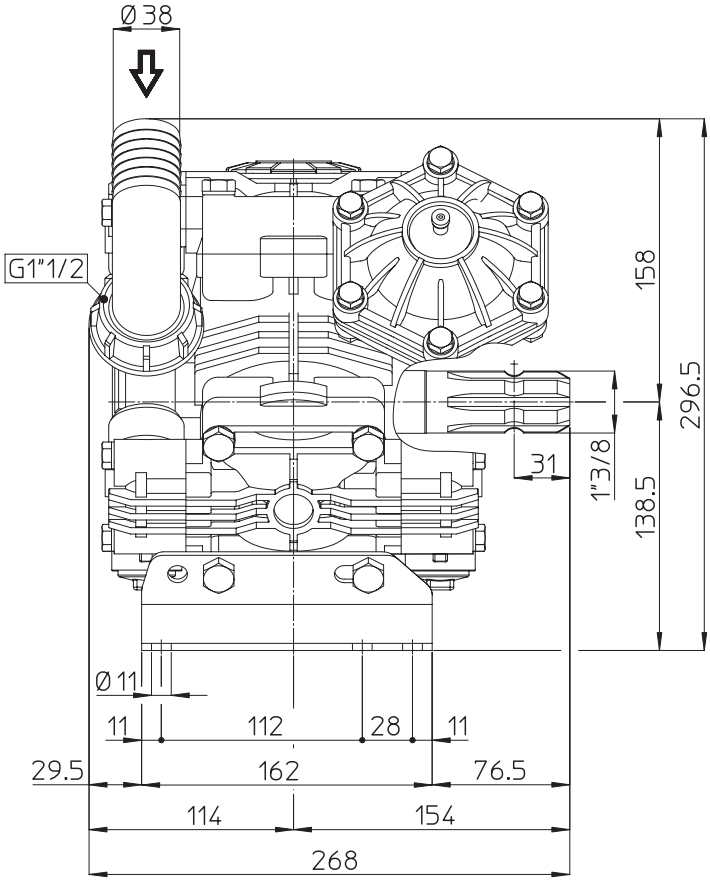

TORQUE SPECS

Ref.	Description	Ft./lb.	Nm
1	**Diaphragm Bolts** (Use Loctite 243)	18	25
2	**Head Bolts**	30	40
3	**Pulsation Dampener Bolts**	18	25
4	**Oil Cup Bolts**	6	8
5	**Manifold Bolts (Plastic)**	14	20

