GENERAL PUMP *A member of the Interpump Group*

YUW2121 / YUB2140

Pressure Trapping Unloader



General Pump recommends using a safety relief device in conjunction with this unloader valve when installed on a positive displacement pump. General Pump is not liable and assumes no responsibility for this valve when used in a customer's high pressure system.

SPECIFICATIONS

Part Number		**YUW2121**(white spring) **YUB2140**(blue spring)
Maximum Volume		21 GPM
Maximum Discharge Pressure	YU2121	2200 PSI
	YU2140	4050 PSI
Temperature		200^{0}F
Port Sizes:	Inlet:	1/2" NPT-F
	Outlet:	1/2" NPT-F
	Bypass (single):	1/2" NPT-F
Dimensions		6.4" x 2.7" x 1.5"
Shipping Weight		3.2 lbs.
Materials		Brass, Stainless Steel, Buna-N

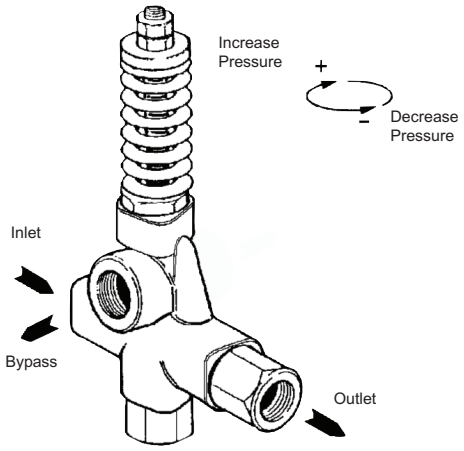

DIMENSIONS

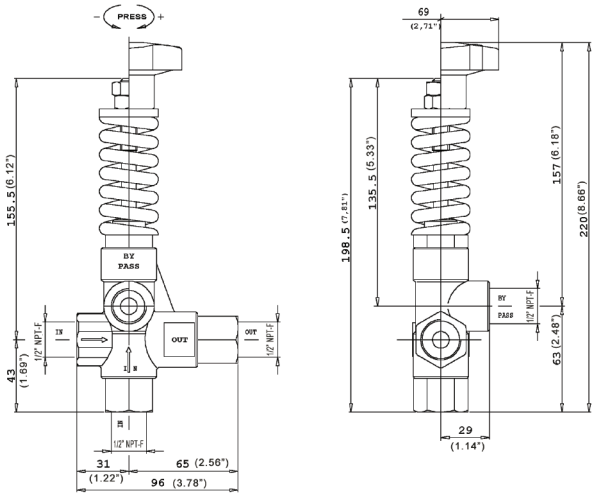

GENERAL PUMP *A member of the Interpump Group*

YUW2121 / YUB2140

Pressure Trapping Unloader w/ Microswitch

PARTS LIST

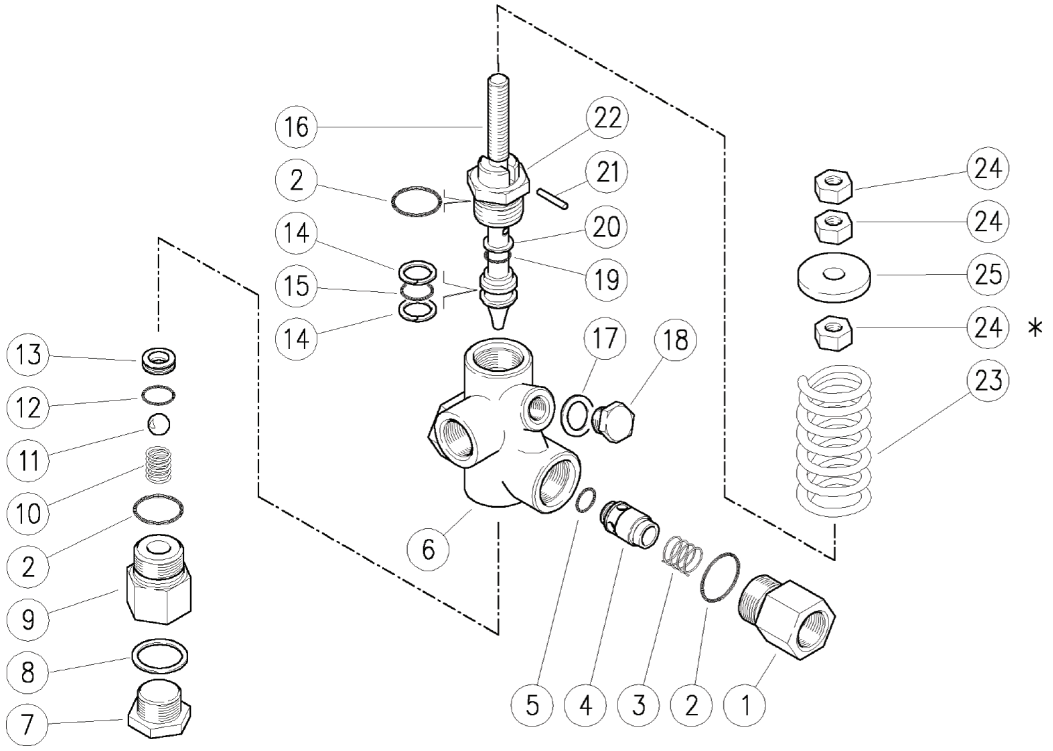

ITEM	PART #	DESCRIPTION	KIT	QTY
1	Y60044231	Delivery Coupling, 1/2" NPT, Brass		1
2	Y10307201	O-ring, 1.78x20.35	*	3
3	Y60040951	Spring, 0.8x15.4x13 mm, SST		1
4	Y60040331	Shutter Pin, Brass		1
5	Y10329200	O-ring, 4x8	*	1
6	Y60042735	Housing		1
7	Y60044431	Grub Screw, Brass, 1/2 NPT		1
8	Y14429000	Washer, 22x27x1.5 mm		1
9	Y60044331	Suction Coupling, 1/2 NPT, Brass		1
10	Y60041051	Spring, 1.6x11.5x20mm, SST		1
11	Y14746100	Ball, 13/32", SST	*	1
12	Y10306001	O-ring, 1.78x12.42 mm		1
13	Y60040851	Seat, 8.5x15.9x4.5 mm, SST	*	1

ITEM	PART #	DESCRIPTION	KIT	QTY
14	Y10401400	Back-up Ring, 18x13.1 mm	*	2
15	Y10317800	O-ring, 2.62x13.1 mm	*	1
16	Y60040751	Piston, SST		1
17	Y14391200	Washer, 14x20x1.5 mm		1
18	Y28001331	Plug, Brass		1
19	Y10317400	O-ring, 2.62x9.93 mm	*	1
20	Y10401500	Back-up Ring, 10x14.5x1.2 mm	*	1
21	Y15103200	Roll Pin, 3 x 18 mm, SST		1
22	Y60040431	Piston Holder, Brass		1
23	Y60041261	Spring, 7.5x35x70 mm, Blue (YUB2140)		1
	Y60041161	Spring, 6.5x33x70 mm, White (YUW2121)		1
24	Y11462900	Hex Nut, M10		3
25	Y60040631	Spring Holding Washer, Brass		1
	YKITU2121	Spares Kit		

TROUBLESHOOTING

PROBLEMS	PROBABLE CAUSES	SOLUTIONS
Unloader Cycles	Damaged discharge check valve Leaking fittings or gun Restricted bypass	Replace Check and renew Clean or adapt
Unloader does not come up to pressure	Unloader not properly sized Debris lodged in unloader Unloader piston o-ring worn Worn nozzle	Select proper unloader Clean unloader Replace Replace
Excessive pressure spikes	Unloader improperly adjusted There is not a minimum of 5% flow in bypass	Adjust unloader Adjust unloader
Unloader won't go into bypass	Discharge check valve jammed Worn discharge check valve o-ring Debris in unloader valve	Clean or replace Replace Clean unloader

GENERAL PUMP 1174 Northland Drive • Mendota Heights, MN 55120
Phone: 651.686.2199 • Fax: 800.454.4524 • e-mail: sales@gpcompanies.com • www.generalpump.com

Ref 300728 Rev. A
12-09

GENERAL PUMP