GENERAL PUMP *A member of the Interpump Group*

YG36LA37

Washdown Gun/Lance Assembly

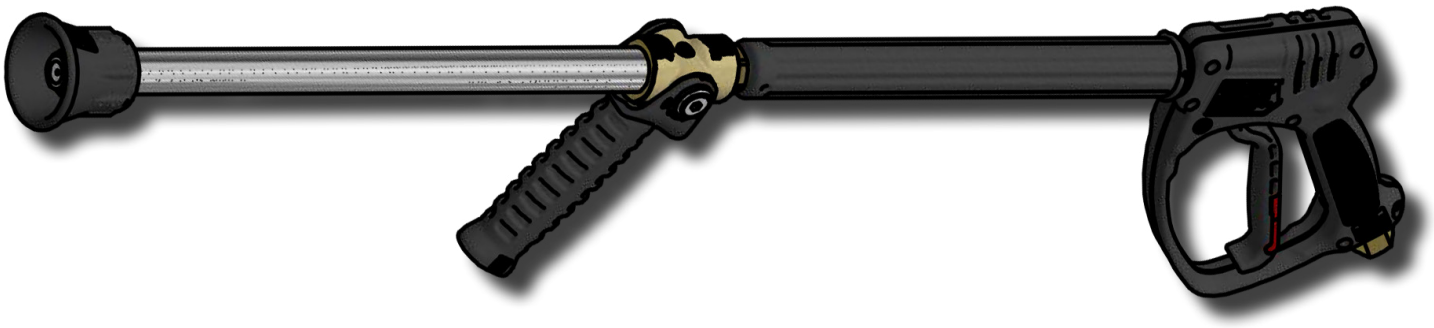

FEATURES

- Shock resistant plastic housing
- Stainless Steel seat and ball
- Internal construction of brass and Stainless Steel
- 37 inch lance
- Ergonomic design
- Minimizes fatigue for the operator

SPECIFICATIONS

Part Number	YG36LA37
Maximum Volume	8.0 GPM
Maximum Discharge Pressure	3,650 PSI
Maximum Fluid Temperature	195° F
Inlet Port Thread	G 3/8” - F
Ceramic Nozzle	#12 (2 mm)
Weight	6.0 lbs.
Materials	Stainless Steel, Brass, Plastic, Buna-N, Teflon

DIMENSIONS

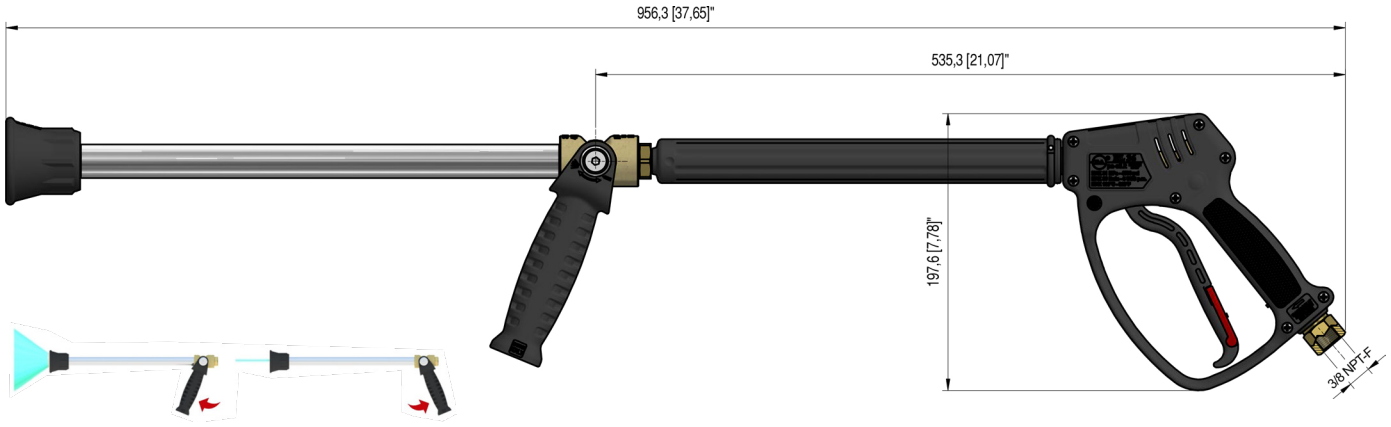

SPRAY GUNS

General Pump
is a member of
the Interpump Group

GENERAL PUMP

YG36LA37

GENERAL PUMP *A member of the Interpump Group*

Washdown Gun/Lance Assembly

PARTS LIST

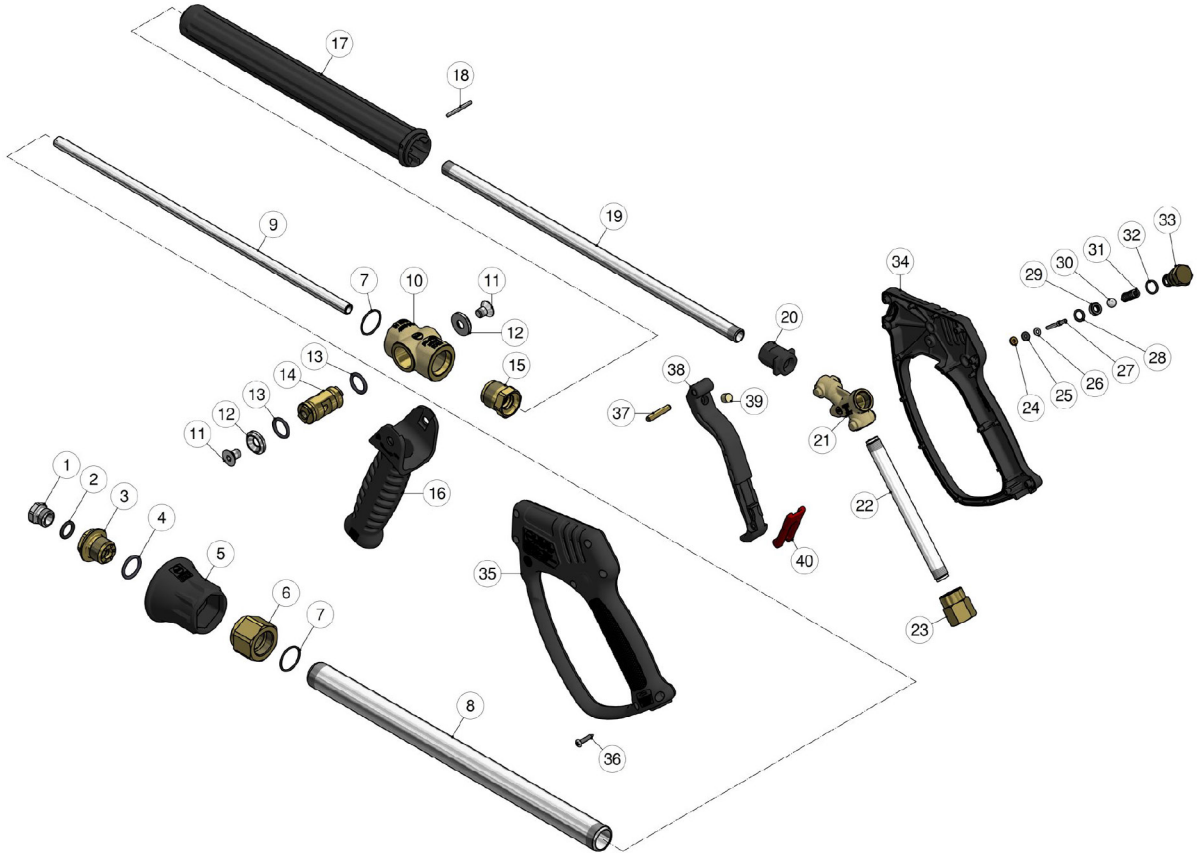

ITEM	PART #	DESCRIPTION	QTY
1	Y41012251	Sst.nozzle d.2 mm fp.12 M16x2	1
2	Y10317601	O-ring, 2,62x 11,81 mm Ni 85	1
3	Y41011331	Nzl holder, M22-M16 MF brass	1
4	Y10318200	O-ring, 2,62x17,96 mm	1
5	Y41011785	Nozzle protection -GV5 black	1
6	Y41011231	Injector coupl. M22-M24 FF brass	1
7	Y10302710	O-Ring, 1,5x22 mm Vit.	2
8	Y41011456	Sst tube, M24x2 L.362,5 mm	1
9	Y41011556	Sst tube L.367,5 mm d.10 mm	1
10	Y41011135	Brass frame .GV5 2 x M24x1	1
11	Y16195412	Screw, DIN7991 M8x12 mm Sst.	2
12	Y80001551	C/sunk washer, 8,5x22x4,5mm Sst.	2
13	Y10318010	O-ring, 2,62x15,08 mm vi.	2
14	Y41011631	Hollow shaft, M8 brass	1
15	Y40021131	Coupling, M24x1M-1/4F Bsp brass	1
16	Y41011884R	Trigger -GV5, black	1
17	Y40004184	R5 insul. round grip, 292mm	1
18	Y15104600	Parallel pin, 3x30 mm Sst.	1
19	Y40000256	Tube, 1/4Bsp MM 370mm Sst.	1
20	Y30455484	Gun outlet adapter, PA black	1

ITEM	PART #	DESCRIPTION	QTY
21	Y30120535	Housing -RL37, brass	1
22	Y30120366	Tube, 1/4Bsp MM 140 mm z.pl.	1
23	Y30120631	Coupl., 1/4F-3/8F Bsp brass	1
24	Y10401800	Back-up ring, 3,2x7,5x1,2 mm	1
25	Y10316500	O-ring, 2,62x2,84 mm Vi 70	1
26	Y14351100	Washer, 3,2x7x0,5 mm sst.	1
27	Y30070451	Piston, 3-4 mm Sst.	1
29	Y30170820	Seat, 6mm Sst.+O-ring 1,78mm NBR85	1
30	Y14744800	Ball, 5/16" Sst.	1
31	Y30259651	Spring, 1,5x6,1x23 mm Sst.	1
32	Y10302002	O-ring, 1,5x10 mm Ni 85	1
33	Y30259531	Spring plug, M16x1 brass	1
34	Y30153424	Casing-kit -RL36 +screws	1
36	Y16307700	S/tapping screw, DIN7981 3,5x18 mm	7
37	Y30251731	Parallel pin, 5x27,5 mm brass	1
38	Y30120484	Trigger -RL37, PA black	1
39	Y30067584	Stop pin, 8x7,1mm	1
40	Y30151084	Safety latch	1
	Y30120924	Repair kit	1

YG36LA37

GENERAL PUMP *A member of the Interpump Group*

Washdown Gun/Lance Assembly

INSTRUCTIONS

This product is to be used with clean, fresh water. For use involving different or corrosive liquids, contact GP's customer service department. Appropriate filtration should be installed when using unclean liquids. Choose the gun that most closely matches the rated pressure, max flow and max temperature of the pressure wash system. In any case, the pressure of the machine should not exceed the permissible pressure rate imprinted on the gun.

INSTALLATION

This gun was designed to operate with hot water (in compliance with the technical specs), making sure not to exceed the max temperature. Always fit a safety valve to protect the system when the latter is under pressure. If the nozzle wears out, the pressure falls. When you install a new nozzle, adjust the system back to the original pressure.

OPERATION

The gun opens and closes a high pressure conduct by means of a piston acting on a seat; the return is controlled by a spring which releases the trigger. Attention: during pump activation ALWAYS set the gun with its safety latch connected in order to prevent accidental openings. The handle on the lance controls the flow.

WARNING: High Pressure Systems require a primary pressure regulating device (i.e. regulator, unloader) and a secondary pressure relief device (i.e. pop-off valve, relief valve). Failure to install such relief devices properly could result in personal injury or damage to pump or property. GP does not assume any liability or responsibility for the operation of the user's high pressure system.

WARNING: This product can expose you to chemicals including lead, which is know to the state of California to cause cancer and birth defects or other reproductive harm. For more information, go to www.P65Warnings.ca.gov

GENERAL PUMP 1174 Northland Drive • Mendota Heights, MN 55120
Phone: 651.686-2199 • Fax: 800.535.1745 • e-mail: sales@gpcompanies.com • www.generalpump.com

Ref 310188 Rev. B
03-25

GENERAL PUMP