GENERAL PUMP *A member of the Interpump Group*

Adjustable Angle Nozzle Holder



SPECIFICATIONS

Part Number:	**YAH14SS**
Flow Rate:	**10.0 GPM**
Maximum Pressure:	**4000 PSI**
Size:	**1/4" NPT-F x 1/4" NPT M**
Dimensions:	**2.33" x .94"**
Weight:	**.36 lbs.**
Materials:	**Stainless Steel**

PARTS LIST

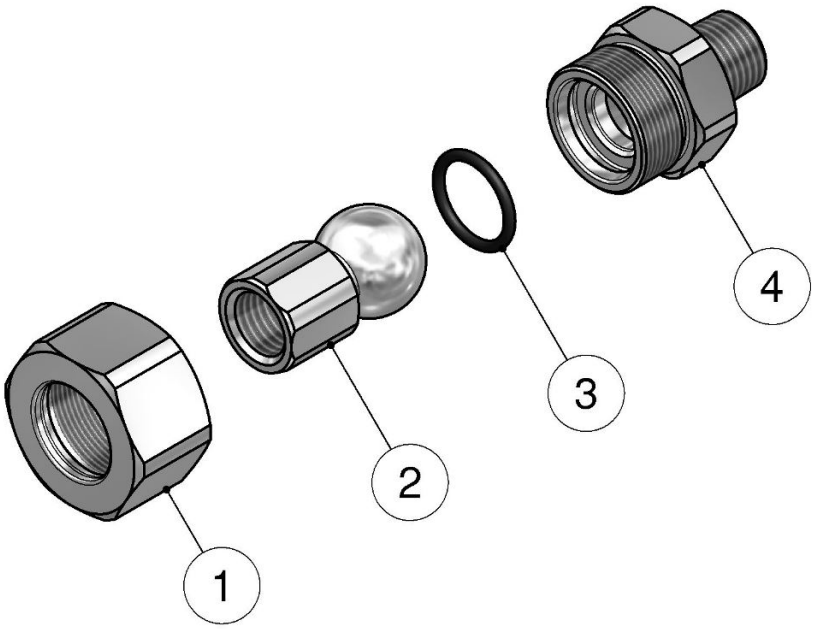

No.	Part #	Description	Qty.
1	Y26170251	Ring nut, M22 x 1, SST	1
2	Y26170651	Ball Nipple, SST	1

No.	Part #	Description	Qty.
3	Y10306401	O-ring, 1.78 x 14 mm, Ni	1
4	Y26170351	Fitting, 1/4", SST	1

General Pump
is a member of
the Interpump Group

GENERAL PUMP

FITTINGS & COUPLERS

GENERAL PUMP *A member of the Interpump Group*

Adjustable Angle Nozzle Holder

DIMENSIONS

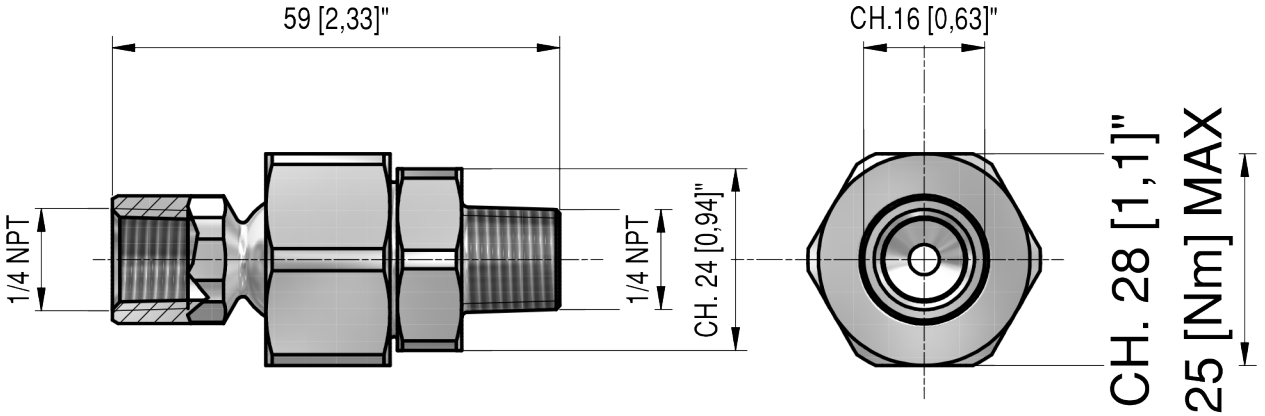

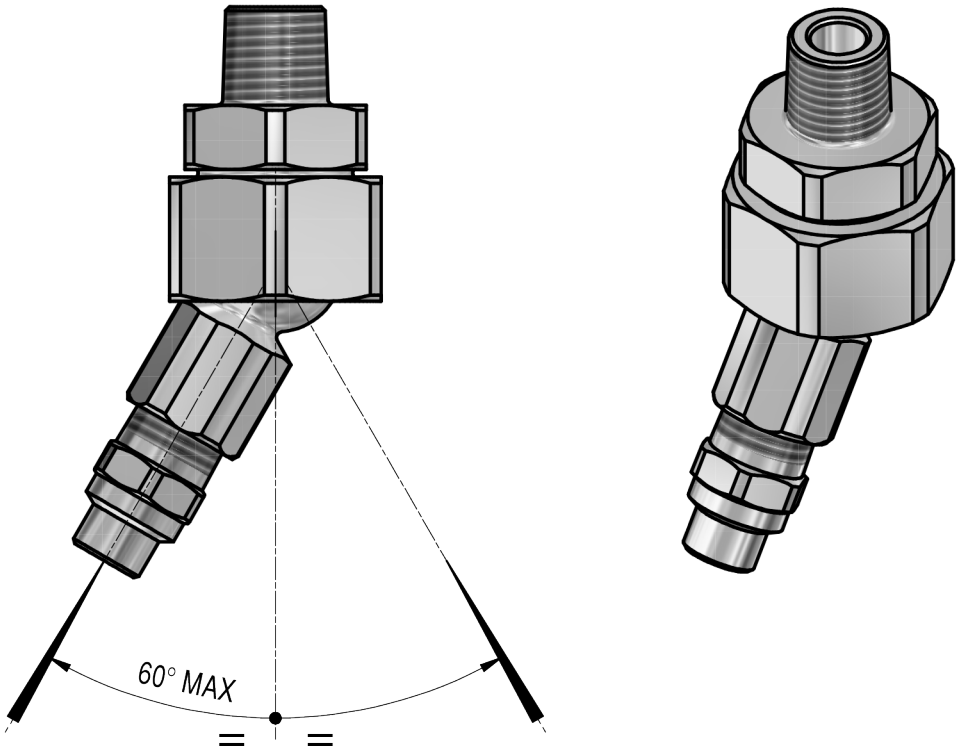

Ref 310194 Rev A
03-20

GENERAL PUMP • 1174 Northland Drive • Mendota Heights, MN 55120
Phone: 651.686.2199 • Fax: 800.535-1745 • email: sales@gpcompanies.com • www.generalpump.com

GENERAL PUMP