GENERAL PUMP *A member of the Interpump Group*

Y29074700
Plastic Hose Reels

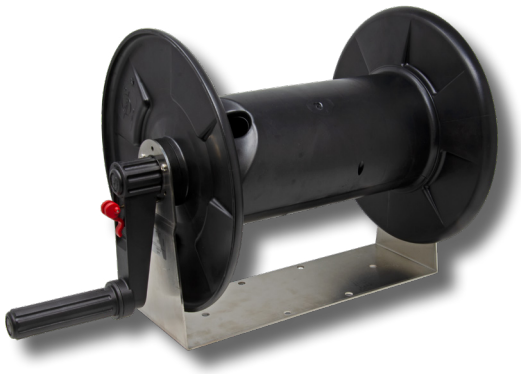

SPECIFICATIONS

PART NUMBER	Y29074700
3/8" Hose Capacity	130 ft.
Swivel Pressure Rating	3,650 PSI
Inlet	3/8" BSP-F
Outlet	3/8" BSP-F
Max. Temp	195º F
Weight	8.52 lbs.

FEATURES / BENEFITS

- Shock proof plastic
- Direct hand-crank rewind with locking pin
- Stainless steel base
- Stainless steel swivel

DIMENSIONS

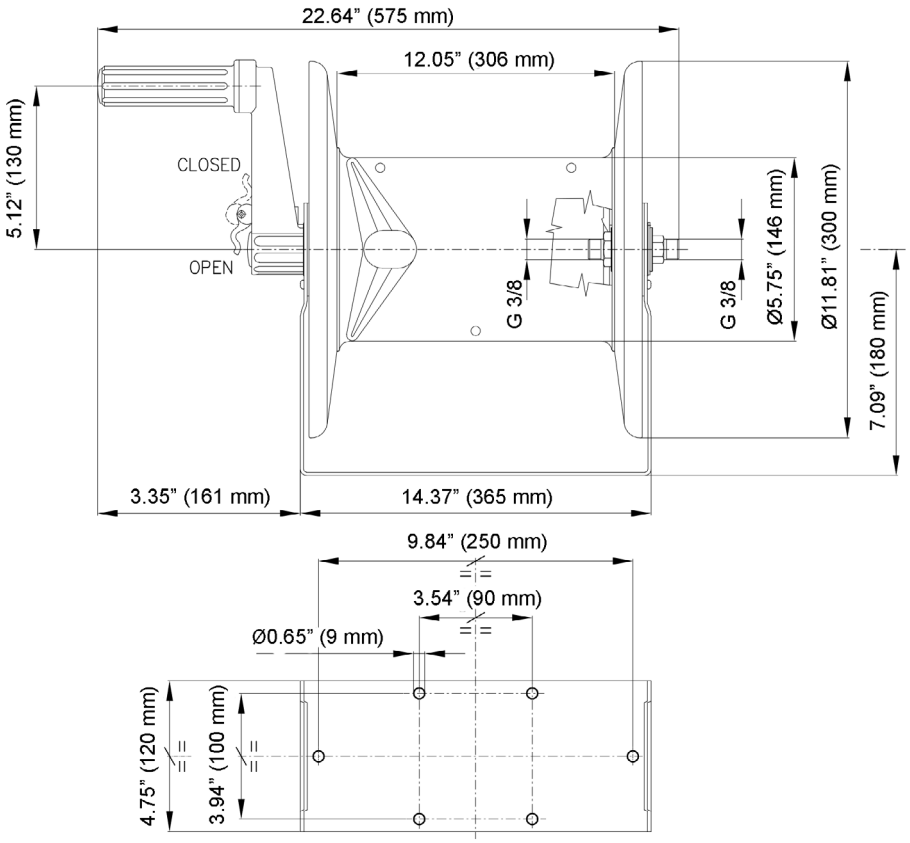

GENERAL PUMP *A member of the Interpump Group*

Y29074700
Plastic Hose Reels

PARTS LIST

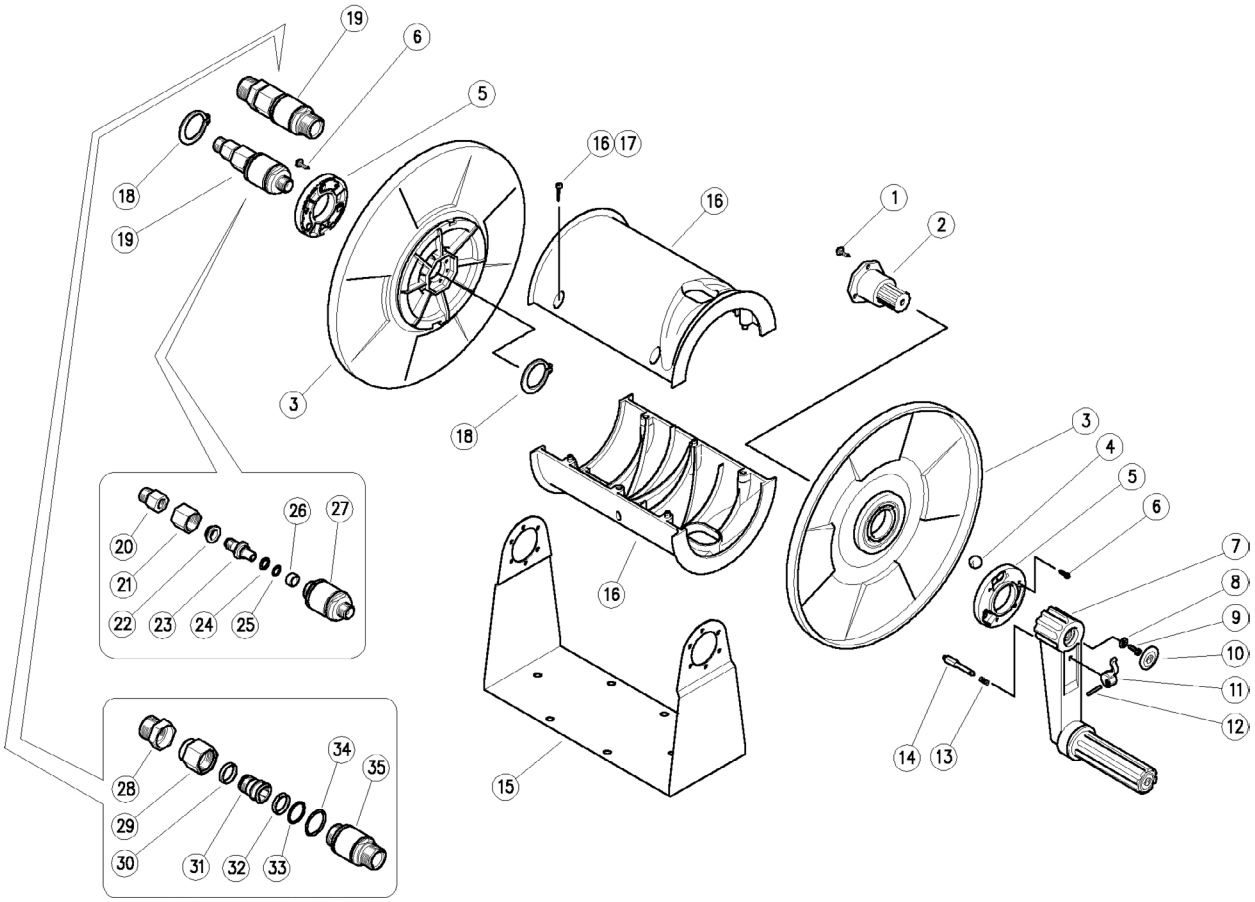

Item	Part No.	Description	QTY
1	Y16309294R	Screw, 4x14 mm Sst.	3
2	Y29071384R	Transmission Pin	1
3	Y29071284R	Side Disk	2
4	Y14742700R	Ball, 7 mm Sst.	3
5	Y29071484R	Washer	2
6	Y16309292R	Screw, 4x12 mm Sst.	6
7*	Y29072321R	Crank	1
8	Y14356905R	Washer, 6.4x11x1 mm Sst.	1
9	Y16309625R	Screw, 6x25 mm Sst.	1
10	Y41041184R	Plug, Knob	1
11*	Y29071684R	Lever	1
12*	Y15103500R	Parallel Pin, 3x19 mm Sst.	1
13*	Y29072251R	Spring, 0.7x6.9x24 mm Sst.	1
14*	Y29071731R	Safety Stud	1
15	Y29074153R	Support, Sst.	1
16	Y29074584R	Semi-shell	2
17	Y16307751R	Screw, 3.5x20 mm Sst.	6

Item	Part No.	Description	QTY
18	Y10103505R	Snap Ring, E 35 Sst.	2
19	Y26115000R	Swivel, Complete Sst.	1
20	Y26110151R	Coupler, M12 F-3/8M Bsp Sst.	1
21	Y26104251R	Ring Nut, M22x1 Sst.	1
22	Y26104584R	Bushing, 12x20x6 mm	1
23	Y26104151R	Pin, M12x1.25 Sst.	1
24	Y10404001R	Back-up Ring, 10.2x13.9x1.2 mm	1
25	Y10310995R	O-ring, 2.4x9.3 mm Vi 70	1
26	Y26104684R	Bushing, 10x14x7 mm	1
27	Y26115151R	Housing, M22x1M-3/8 Bsp Sst.	1
28	Y26118151R	Coupling, 3/4M Bsp-M20x1F Sst.	1
30	Y26118385R	Bushing, 20.5x24x4 mm PTFE	1
31	Y26118251R	Pin, M20x1M-24 mm Sst.	1
32	Y26118485R	Bushing, 20.5x24x4 mm PTFE	1
33	Y10309300R	O-ring, 2x20 mm	1
34	Y10307300R	O-ring, 1.78x23.52 mm	1
35	Y26118751R	Housing, 3/4 Bsp mm Sst.	1
*	Y29921098R	Crank Replacement Kit	

GENERAL PUMP *A member of the Interpump Group*

Y29074700

Plastic Hose Reels

ASSEMBLY / OPERATING INSTRUCTIONS

Tools Required:

1. Phillips screwdriver
2. 8 mm socket or wrench
3. Snap ring pliers

Max Torque Settings:

Position	Description	Ft. Lbs.	Nm.
A	Phillips Screw M4 x 12 mm	1.5	2
B	Hex Head Bolt M6 x 20 mm	2.2	3
C	Phillips Screw M3.5 x 20 mm	1.1	1.5

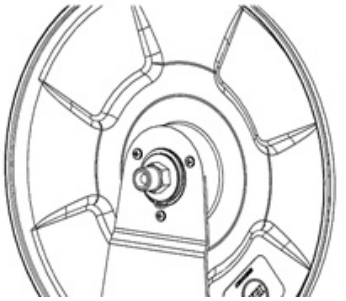

1. Using a snap ring pliers, remove the outer snap ring on the swivel side flange

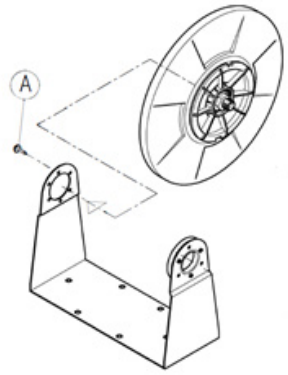

2. Using a screwdriver, secure swivel side flange to support arm without the bearing washer by installing (3) M4 x 12mm screws.

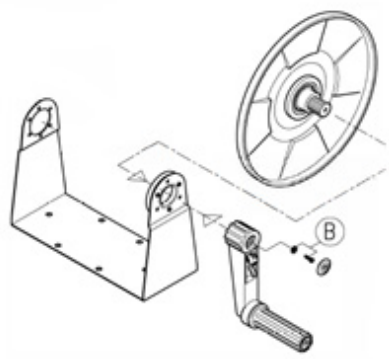

3.Using an 8mm socket, secure handle side flange to support arm by M6 washer, M6 x 20 bolt and knob plug.

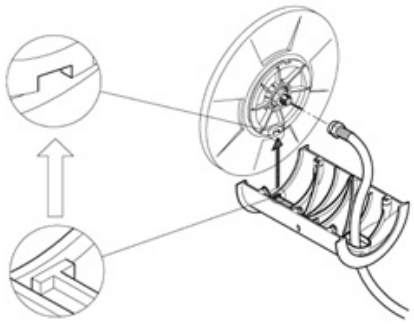

4. Place one half of the drum with the hose opening faced away from swivel onto the flanges, be careful to align the notch and groove. Feed hose through hole and attached to swivel (check for leaks).

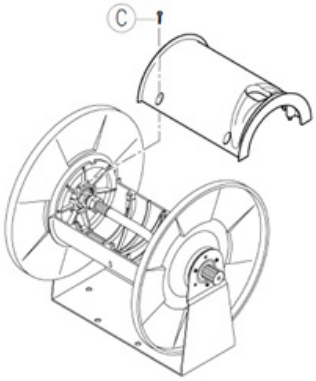

5. Place the other half of the drum with the hose opening faced away from swivel onto the flanges, be careful to align the notch and groove. Using a screwdriver secure the two halves together by installing (8) M3.5 x 20mm screws.

WARNING!

Exposure of skin directly to pressurized air or fluids could result in severe bodily injury!

Warning. Only **trained** and **qualified** personnel should install or replace the device.

Warning. De-pressurize prior to servicing.

GENERAL PUMP • 1174 Northland Drive • Mendota Heights, MN 55120
Phone: 651.686.2199 • Fax: 800.535.1745 • email: sales@gpcompanies.com • www.generalpump.com

Ref 301067 Rev A
04-21

GENERAL PUMP