YOU CAN DEPEND ON
DAVEY



DAVEY
XP Series

Model Numbers:
XP25P8, XP35P8, XP45P8

GUARANTEE
2 YEARS

APPLICATIONS

Ideal for small/average size homes, cottages, weekenders, caravans and boats (240V A.C. power), domestic water supply, pressure boosting and automatic water transfer.

Tested in compliance with
AS/NZS 4020
for use in contact with safe drinking water

SINGLE STAGE JET ASSISTED PRESSURE SYSTEM

FEATURES & BENEFITS

The unit features a TEFC corrosion resistant motor driven by a single stage, jet assisted centrifugal pump and includes a built in pressure accumulator with a "Supercell" 8P tank which provides 3 litre draw-off.

- Manufactured from quality corrosion resistant materials
- Motor and pump designed for frequent starts
- Discharge may be rotated through 180° – makes plumbing easier
- Quick and easy installation
- Low maintenance
- Easy to service if required
- Every pump is performance and pressure tested in our factory to ensure quality and reliability

MOTOR

- **Davey manufactured**
- **High quality purpose built 2 pole IP55 Davey pump motors with:** Choice of 220/240 volt, 50/60Hz, 2850rpm or 110/115 volt, 60Hz, 3420rpm to suit almost every supply voltage
- **Class F insulation**
- **Permanently split capacitor design** for dependable and frequent starting every time
- **Double contact C3-HTG rated sealed ball bearings** for longer life
- **In-built thermal overload protection** for long motor life and protection against motor damage due to jamming
- **Feet on motor shell** provide outstanding life even when installed on wet surfaces

PRESSURE TANK

- **Captive diaphragm design**
- **Heavy duty Butyl diaphragm** meets health requirements for potable water applications
- **Deep drawn steel shell** with appliance like 2 part paint finish

Home Pressure Systems

DAVEY

OPERATING LIMITS			
Model	XP25P8	XP35P8	XP45P8
Capacities to	25 lpm @140kPa	35 lpm @140kPa	45 lpm @140kPa
Maximum total head	31m	35m	32m
Cut-in pressure	140kPa		
Cut-out pressure	280kPa		
System draw off	115ml		
Maximum liquid temperature	50°C		
Maximum ambient temperature	55°C	50°C	
Maximum suction lift	6m		
Inlet size	1"F		
Outlet size	1"M		

ELECTRICAL DATA			
Model	XP25P8	XP35P8	XP45P8
Supply Voltage	220-240V		
Supply frequency	50Hz		
Nominal speed	2850rpm		
Input power (P_1)	0.54kW	0.62kW	
Output power (P_2)	0.33kW	0.45kW	
Full load current	2.3 amps	2.8 amps	
Locked rotor current	12 amps		
Starting	P.S.C.		
Enclosure class	IP55		
Insulation class	Class F		
Pressure switch cut-in	140kPa		
Pressure switch cut-out	280kPa		

MATERIALS OF CONSTRUCTION	
PART	MATERIAL
Impellers	Glass filled polycarbonate
Pump casing	Glass filled nylon
Pump shaft	304 stainless steel
Internal check valve	Delrin
Check valve spring	304 stainless steel
Seal ring (stationary)	Ceramic
Seal ring (rotating)	Carbon
Seal ring elastomer	Nitrile rubber
Seal spring	304 stainless steel
O-rings	Nitrile rubber
Jet	Acetyl
Venturi/coverplate	Glass filled noryl
Priming plug	Glass filled polypropylene
Motor shell	Marine grade aluminium
Motor shell finish	Baked polyester
Pressure tank shell	Steel
Pressure tank shell finish	Epoxy primer with polyurethane epoxy finish
Pressure tank diaphragm	Butyl rubber
Pressure tank liner	Potable grade virgin polypropylene
Pressure tank inlet	Stainless Steel

INSTALLATION AND PRIMING

- On installations with suction lifts over 1m, a good quality foot valve should be fitted to avoid loss of prime. In this case the check valve inside the pump should be removed.
- The system is primed by removing the pressure tank, filling with water and replacing the tank prior to switch on.
- For suction lifts over 1.5m the pressure switch may need to be adjusted to enable the pump to automatically cut-out.
- Fill pump and suction lines through pressure switch port.

HYDRAULIC PERFORMANCE

XP25P8

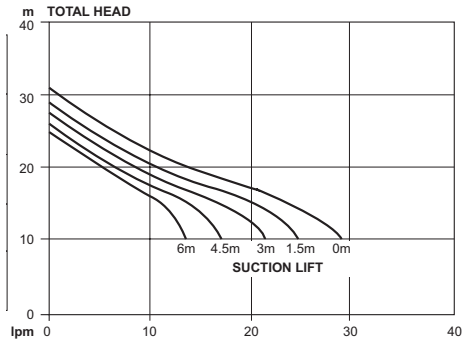

XP35P8

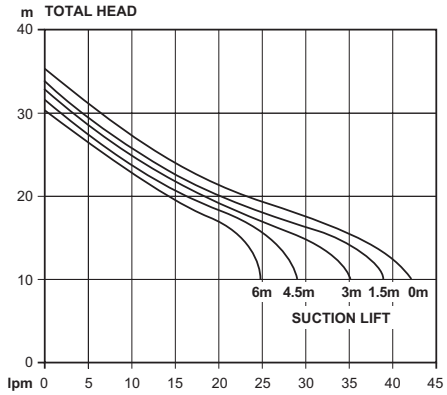

XP45P8

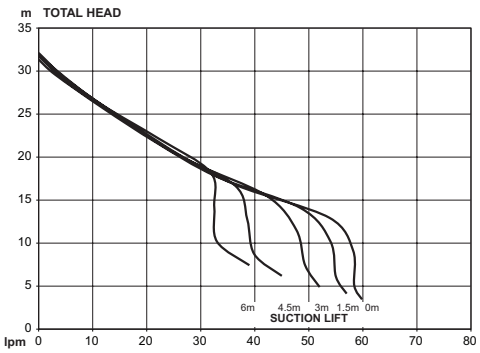

DIMENSIONS (mm)

A	B	C	D	E	F	G	Mounting Holes Diameter	Inlet BSP	Outlet BSP	Net Weight (kg)
424	565	200	131	170	215	170	10	1" F	1" F	6.21

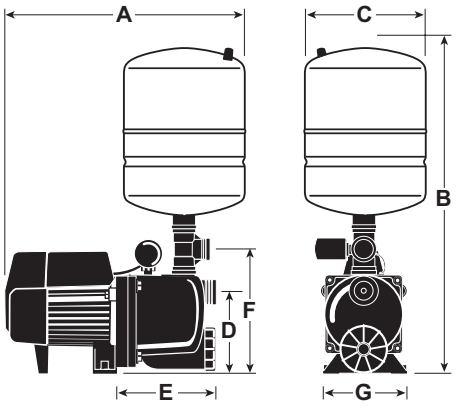

H/O & MFG SCORESBY
Certified System Quality ISO 9001
Certified System Environment ISO 14001

daveywater.com

This literature is not a complete guide to product usage. All images provided in this document are for illustration purposes only. Further information is available from your Davey Dealer, Davey Support Centre and from the relevant product Installation and Operating Instructions. Must be read in conjunction with the relevant product Installation and Operating Instructions and all applicable statutory requirements. Product specifications may change without notice. ® Davey is a registered trademark of Davey Water Products Pty Ltd. © Davey Water Products Pty Ltd 2026.

DAVEY

DWP0825-4/0124