DAVEY



Model Number:
71101D (220-240V 50HZ),
71101Y (110-120V 60HZ)

GUARANTEE
2 YEARS

APPLICATIONS

Pumping of non-explosive chemical solutions* without fibres or solids in such applications as pressure boosting, circulation applications, transfer duties and dog or pet baths.

DAVEY
XF Series

SINGLE STAGE ELECTRIC TRANSFER PUMP

FEATURES & BENEFITS

- **Manufactured from quality corrosion and chemical resistant materials**
- **TEFC motor-corrosion resistant and resistant to dust, dirt and vermin**
- **Motor and pump designed**
- **Quick and easy installation**
- **Low maintenance**
- **Easy to service if required**
- **Also available in 110 or 220 Volt 60Hz single phase**

PUMP

- 1 stage (single impeller)
- Closed vane impellers
- Stainless Steel pump shaft
- Mechanical shaft seal
- O-ring casing seal
- Pump includes 2m power lead with 10amp
- Australian three pin plug

MOTOR

- Davey manufactured
- TEFC with IP55 enclosure
- Class F insulation
- Double contact sealed bearings
- In-built thermal overload protection
- Plastic feet on motor shell

* Subject to compliance with Davey recommendations and compliance with statutory requirements applicable to installation and operation of chemical pumps.

Transfer Pumps

DAVEY

OPERATING LIMITS	
Capacities to	160 lpm
Maximum total head	16m
Maximum suction head	7.5m
Maximum water temperature	50°C
Minimum water temperature	1°C
Maximum specific gravity	1.2
Maximum ambient temperature	50°C
Maximum casing pressure	250kPa
Inlet size	1" BSP(F)
Outlet size	1" BSP(M)

MATERIALS OF CONSTRUCTION	
PART	MATERIAL
Impellers	Glass filled nylon 12
Lock nut	Glass filled nylon 12
Pump casing	Glass filled nylon 12
Clamp band	304 stainless steel
Pump shaft	304 stainless steel
Suction cover	Glass filled nylon 12
Seal ring (stationary)	Ceramic
Seal ring (rotating)	Carbon
Seal spring	304 stainless steel
O-rings	Nitrile rubber
Diffusers	Glass filled nylon 12
Spacer	Glass filled nylon 12
Priming plug	Glass filled nylon 12
Motor shell	Marine grade aluminium
Shell finish	Baked polyester

INSTALLATION AND PRIMING

- Installation with suction lift require a good quality foot valve to avoid loss of prime.
- To prime, fill pump body and suction line through priming plug hole located above suction inlet and replace plug.

HYDRAULIC PERFORMANCE

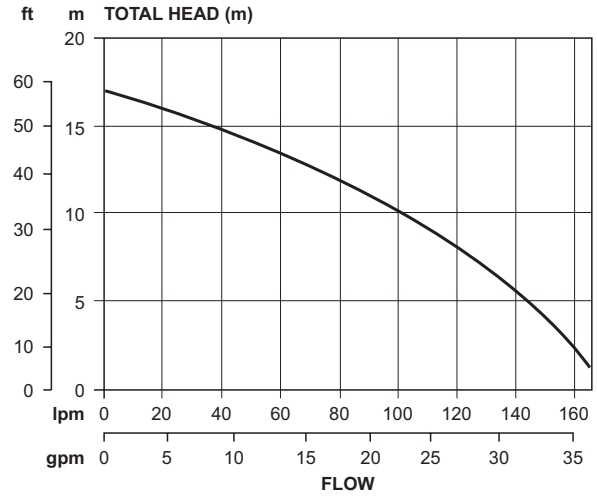

ELECTRICAL DATA		
Model	220-240V	110-120V
Supply frequency – single phase	50Hz	60Hz
Full load current	2.8A	7.5A
Locked rotor current	12.0A	16.0A
Input power (P_1)	0.64kW	0.60kW
Output power (P_2)	0.45kW	
Enclosure class	IP55	
Insulation class	Class F	
Starting	P.S.C.	

DIMENSIONS (mm)

Model	A	B	C	D	E	F	Mounting holes diameter (mm)	Inlet B.S.P.	Outlet B.S.P.	Net Weight (kg)
XF171	325	215	193	100	126	100	10 @ 140 centres	1"F	1"M	6.7

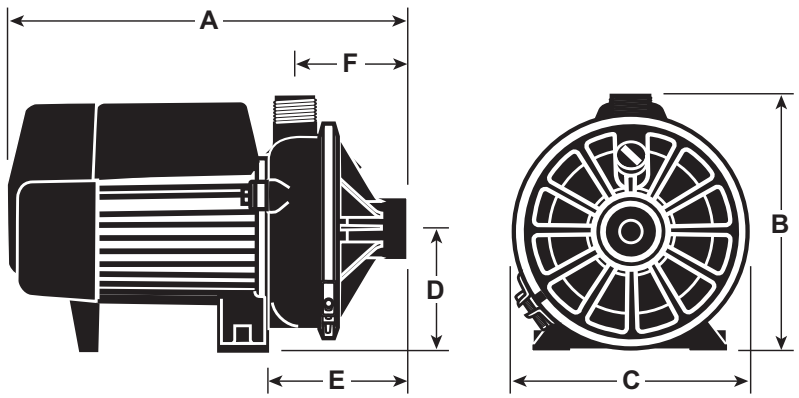

H/O & MFG SCORESBY
Certified System Quality ISO 9001
Certified System Environment ISO 14001

daveywater.com

This literature is not a complete guide to product usage. All images provided in this document are for illustration purposes only. Further information is available from your Davey Dealer, Davey Support Centre and from the relevant product Installation and Operating Instructions. Must be read in conjunction with the relevant product Installation and Operating Instructions and all applicable statutory requirements. Product specifications may change without notice.
® Davey is a registered trademark of Davey Water Products Pty Ltd. © Davey Water Products Pty Ltd 2024.

DAVEY

DWP0718-2/0124