DAVEY



MODEL NUMBERS:
XF171S, XF192S

WARRANTY
2 YEARS

PART NUMBERS:
71101S, 71301S

APPLICATIONS

Ideal for pumping clean, non-volatile liquids without fibres or solids in such applications as sea water, aquaculture, mild acid solutions, washing systems, hydroponics and desalinated water.

DAVEY
XF Series

SINGLE OR TWIN STAGE ELECTRIC TRANSFER PUMP

FEATURES & BENEFITS

Robust and compact, 1 or 2 stage centrifugal pumps with silicon carbide seals, corrosion resistant componentry and driven by a TEFC motor. Designed for total head duties to 33m and flows to 225 lpm.

All models are fitted with “Thermotection” for closed head pump protection.

PUMP

- 1 or 2 stage (single or twin impeller)
- Closed vane impellers
- Stainless Steel pump shaft
- Corrosion resistant casing
- Silicon carbide mechanical seal (SIC)
- O-ring casing seal

MOTOR

- Davey manufactured
- TEFC with IP55 enclosure
- Class F insulation
- Permanently split capacitor design
- Double contact C3-HTG sealed bearings
- Inbuilt thermal overload protection
- Plastic feet on motor shell

THERMOTECTION

Thermotection will automatically stop the pump should the water in the casing reach 85°C. This condition may occur when a fully primed pump is operated without being allowed to discharge water (i.e. closed head operation). Thermotection control will automatically restart the pump when the water temperature drops below 65°C±5°C.

- Manufactured from quality corrosion resistant materials
- TEFC motor corrosion resistant and excludes dust and dirt
- Motor and pump designed for frequent starts
- Quick and easy installation
- Low maintenance
- Easy to service if required
- Protected against pump damage from closed head operation

Transfer Pumps

DAVEY

OPERATING LIMITS		
Model	XF171S	XF192S
Capacities to	175 lpm	190 lpm
Maximum total head	17m	33m
Maximum suction head	7.5m	7.5m
Maximum water temperature	50°C	
Minimum water temperature	1°C	
Inlet size	1" BSP(F)	
Outlet size	1" BSP(F)	1" BSP(F)
Maximum casing pressure	250kPa	400kPa

MATERIALS OF CONSTRUCTION	
PART	MATERIAL
Impellers	Glass filled polycarbonate
Lock nut	Glass filled nylon
Pump casing – XF171S – XF192S	 Glass filled noryl 316 stainless steel
Clamp band	304 stainless steel
Pump shaft	304 stainless steel
Suction cover	Glass filled noryl
Seal ring (stationary)	Silicon carbide (SIC)
Seal ring (rotating)	Aluminium oxide
Seal spring	316 stainless steel
O-rings	Nitrile rubber
Diffusers	Glass filled noryl
Blanking ring – XF192S	Glass filled noryl
Spacer	Glass filled nylon
Priming plug	Glass filled noryl
Motor shell	Marine grade aluminium
Shell finish	Baked polyester

INSTALLATION AND PRIMING

- Installation with suction lift require a good quality foot valve to avoid loss of prime.
- To prime, fill pump body and suction line through priming plug hole located above suction inlet and replace plug.

HYDRAULIC PERFORMANCE

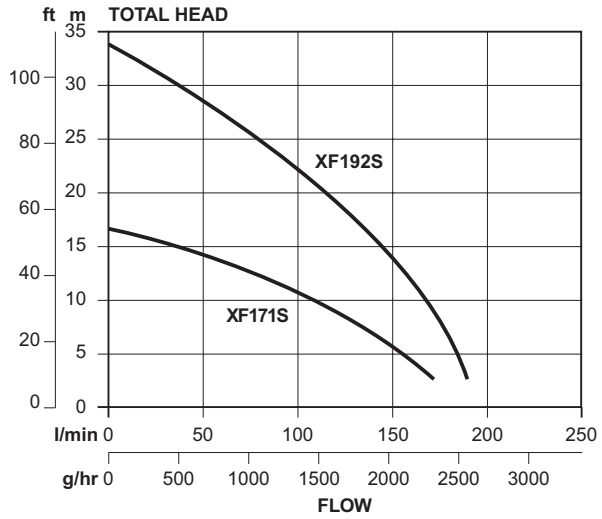

ELECTRICAL DATA		
Model	XF171S	XF192S
Supply voltage	220-240V ±6%	
Supply frequency	50Hz	
Full load current	2.8A	5.2A
Locked rotor current	12.0A	18.0A
Input power (P_1)	0.78kW	1.15kW
Output power (P_2)	0.53kW	0.80kW
Enclosure	IP55	
Insulation	Class F	
Starting	P.S.C.	
Power lead	3m - 10Amp	

DIMENSIONS (mm)										
Model	A	B	C	D	E	F	Mounting holes diameter (mm)	Inlet B.S.P.	Outlet B.S.P.	Net Weight (kg)
XF171S	325	215	193	100	126	100	10 @ 140 centres	1"F	1"M	6.7
XF192S	350	220	195	100	125	100		1"F	1"F	8.8

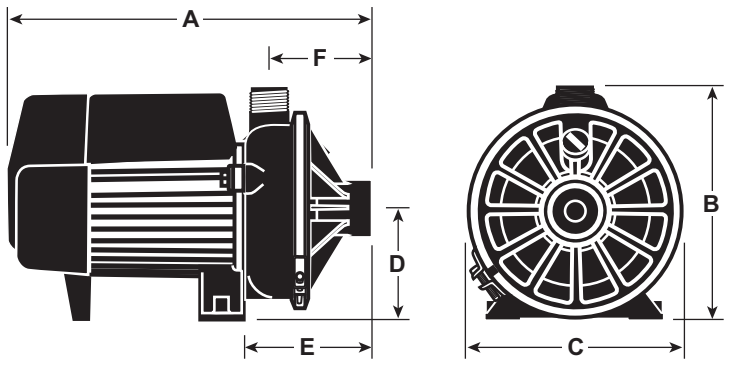

H/O & MFG SCORESBY
Certified System Quality ISO 9001
Certified System Environment ISO 14001

daveywater.com

This literature is not a complete guide to product usage. All images provided in this document are for illustration purposes only. Further information is available from your Davey Dealer, Davey Support Centre and from the relevant product Installation and Operating Instructions. Must be read in conjunction with the relevant product Installation and Operating Instructions and all applicable statutory requirements. Product specifications may change without notice.
® Davey is a registered trademark of Davey Water Products Pty Ltd. © Davey Water Products Pty Ltd 2025.

DAVEY

DWP00422-4/0625