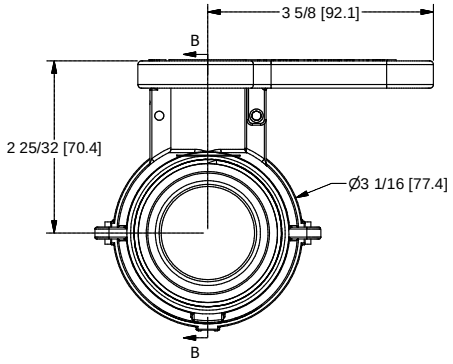

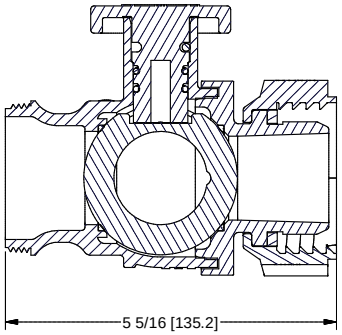

Parts List			
ITEM	QTY	PART NUMBER	DESCRIPTION
1	1	WS22296	WELDED VALVE ENDPLATE
2	1	WSF20264	2" QDC WELD BODY
3	1	V22275G	VALVE GASKET
4	1	V22283C	MALE COLLAR HALF
5	1	V22283D	FEMALE COLLAR HALF
6	1	WS20002	Pin
7	1	WS20153	2" Handle for W Valve
8	1	WS20255T	2" TUMBLED VALVE BALL
9	2	WS20163E	#115 O'RING
10	1	VL1004	EPDM DECAL



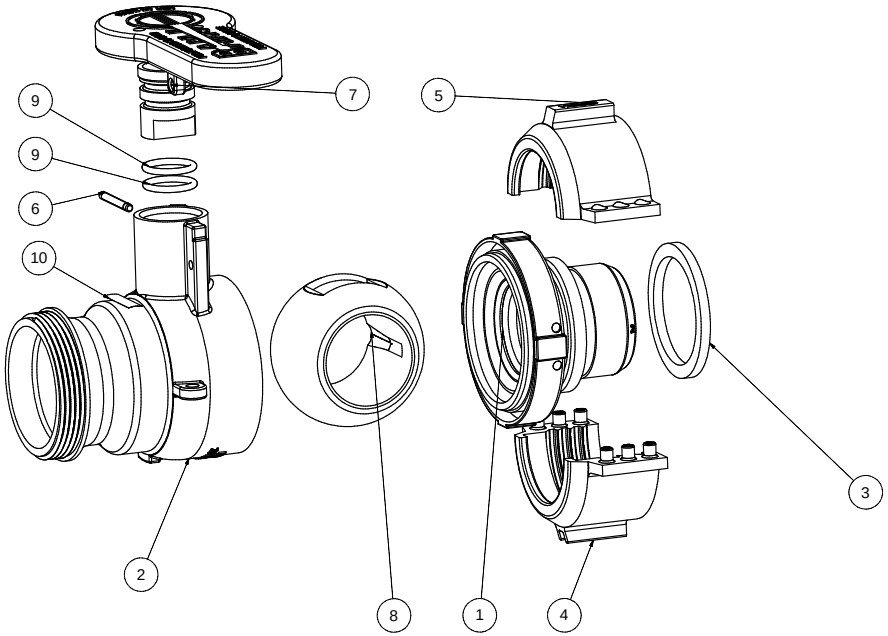

THIS DRAWING AND ALL INFORMATION CONTAINED THEREON ARE THE EXCLUSIVE PROPERTY OF BANJO CORPORATION.

UNLESS SPECIFACALLY NOTED, THIS DRAWING AND ITEMS SHOWN ON THIS DRAWING ARE SUBJECT TO CHANGE AT ANY TIME.

BANJO® CORPORATION

BANJO CORPORATION
150 BANJO DRIVE, CRAWFORDSVILLE, IN 47933
WEB SITE: WWW.BANJOCORP.COM
E-MAIL: SALES1@BANJOCORP.COM

DESCRIPTION
2" COMBO OUTLET WELD VALVE, MAUSER

PART NUMBER
WSF223MR