DAVEY

Pressure Systems with

DAVEY
Torrium®2

Installation and Operating Instructions



NOTE: Prior to installation remove the inlet and outlet pipe transport plugs & associated seals from the suction and/or discharge ports.

WARNING: The Torrium2 controller, pump and associated pipework operate under pressure. Under no circumstances should the Torrium2 controller, pump or associated pipework be disassembled unless the internal pressure of the unit has been relieved. Failure to observe this warning will expose persons to the possibility of personal injury and may also result in damage to the pump, pipework or other property.

WARNING: Failure to follow these instructions and comply with all applicable codes may cause serious bodily injury and/or property damage.

Please pass these instructions on to the operator of this equipment.

Prior to using this pump you must ensure that:

- The pump is installed in a safe and dry environment
- The pump enclosure has adequate drainage in the event of leakage
- Any transport plugs are removed
- The pipe-work is correctly sealed and supported
- The pump is primed correctly
- The power supply is correctly connected
- All steps have been taken for safe operation

Appropriate details for all of these items are contained in the following Installation and Operating Instructions. Read these in their entirety before switching on this pump. If you are uncertain as to any of these Installation and Operating Instructions please contact your Davey dealer or the appropriate Davey office as listed on the back of this document.

Congratulations on your purchase of a high quality, Australian built Davey pressure system. All components have been designed and manufactured to give trouble free, reliable operation.

Your new pressure system incorporates 'Torrium2', electronic flow controller – a Davey designed unit that enables the use of a highly efficient pump design and offers the following benefits:–

1. Enables the pump to deliver a constant flow of water particularly at low flow rates – reducing the inconvenience of pressure variation in showers etc.
2. Provides automatic "cut-out" protection should the pump run out of water or overheat*, should the pump fail to start due to low voltage or a blockage in the pump.
3. Provides an easy to understand visual representation of the system status.
4. Has adaptive pressure cut-in which allows the pump to start at approximately 80% of the maximum pressure at last shut-down. This allows the controller to accommodate varying inlet pressures and pump performance.
5. Automatic retry functions in the event of a critical system fault.
6. Easy visual guide to the status of the inbuilt surge arrestor.
7. Choice of both vertical and horizontal outlets.

* Motor overload / overheat protection included. Motor has its own overload / overheat protection.

Before installing your new pump, please read all instructions carefully as failures caused by incorrect installation or operation are not covered by the guarantee. Your Davey pressure system is designed to handle clean water. The system should not be used for any other purpose without specific referral to Davey. The use of the system to pump flammable, corrosive and other materials of a hazardous nature is specifically excluded.

NOTE: Prior to installation remove the red transport plugs from the suction and/or discharge.

1. Torrium2 cap which covers the 1” Male Vertical Outlet and access to the internal check valve. Can be used as priming plug if check valve removed.
2. Torrium2 Control Module
3. Discharge Outlet
4. Suction Inlet
5. Pump Body
6. Motor
7. Priming Plug

HP

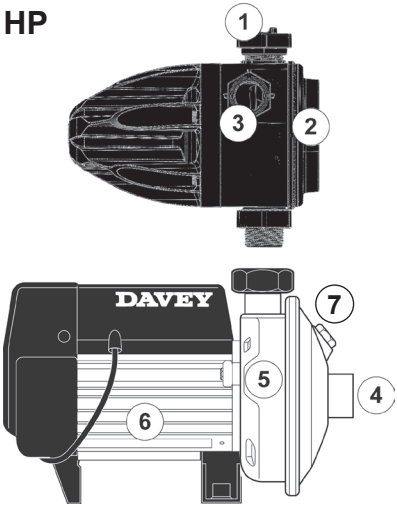

HS

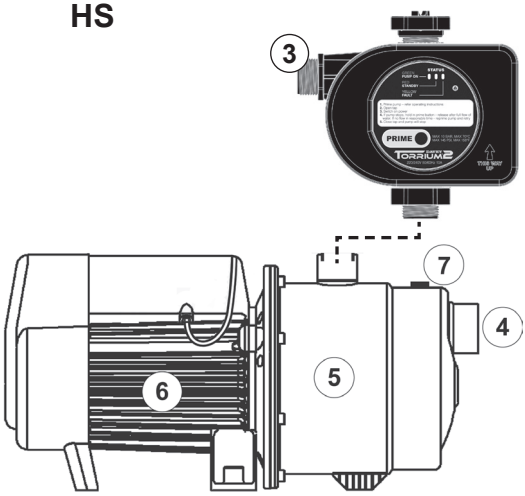

HM

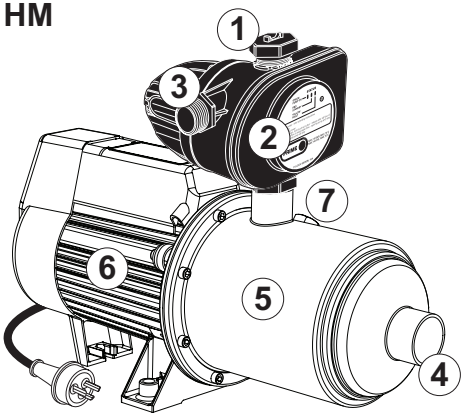

XJ

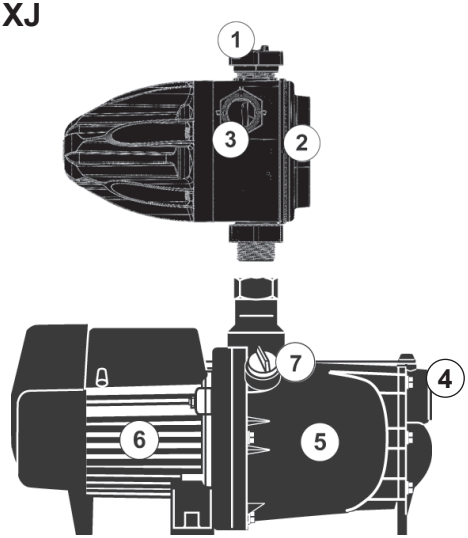

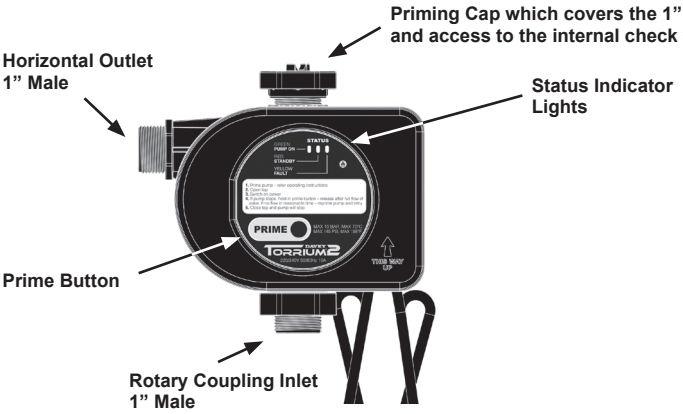

Fitting the Torrium2 directly to the Pump

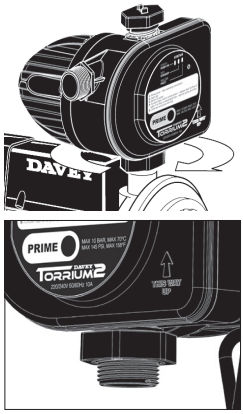

The Torrium2 is fitted with a rotary coupling. This coupling allows the pump controller to be fitted simply and easily to the pump discharge.

The coupling has an oring seal. The controller adaptor nut is able to rotate independent of the Torrium2 and the complete pump, this allows it to be tightened onto the pump easily. For ease of installation a tightening tool is included with Torrium2 to tighten the controller nut to ensure a firm connection to your controller.

The ability to rotate the adaptor nut also means that the complete controller, once fitted to the pump, can be rotated a full 360° in the horizontal plane, without causing the coupling to unscrew from the pump outlet.

With Torrium2 you can connect the discharge pipework to the discharge port and/or the vertical priming port. The priming port is able to be used as a discharge port.

Discharge Connections

The Torrrium2 offers the option of using one or both outlet options.
Use of the horizontal outlet only allows for either:

1. Easy access to prime the pump and / or the removal of the inbuilt Torrium check valve
2. Fitment of a pressure tank (up to 20 litre capacity) onto the priming port / vertical discharge port.
   For optimal draw off, see section on “Extra Draw-off Capacity.”

If you use the vertical outlet instead or as well, you need to consider access to the inbuilt check valve in the Torrium. Davey suggest you use a flexible connection and / or union connection to allow for ease of access to the check valve.

Choosing a Site

Choose a site with a firm base and as close to the water source as possible with correct power supply. Make sure your pressure system is always connected to an adequate, reliable source of clean water.

Housing your Davey Pressure System

To protect your pressure system from the weather, make sure the pump house is both water proof, frost free and has adequate ventilation. The pump should be horizontally mounted on a firm base allowing for drainage, to avoid damage to flooring etc., that over time may occur from leaking pipe joints or pump seals. Do not mount the pump vertically.

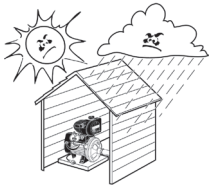

WARNING: Some insects, such as small ants, find electrical devices attractive for various reasons. If your pump enclosure is susceptible to insect infestation you should implement a suitable pest control plan.

Power Connection

Connect lead to power supply designated on pump label. Do not use long extension leads as they cause substantial voltage drop, poor pump performance and may cause motor overload.

The Davey Torrium2 fitted to this pump has status indicator light mounted on its front panel. These lights will only work when unit is connected to an electrical supply.

The electrical connections and checks must be made by a qualified electrician and comply with applicable local standards.

Auto-retry and Water Return Modes

Should your Torrium2 detect a loss of prime, after stopping the pump, it will wait five minutes before activating Auto-retry and Water Return modes. Auto-retry automatically starts the pump to see if the pump is now primed. It does this after 5 mins, 30 mins, 1 hr, 2 hrs, 8 hrs, 16 hrs and 32 hrs. Water return mode will restart the pump automatically if the Torrium2 detects water flow through it.

Electrical Power Surge Protection

An electrical power surge or spike can travel on the supply lines and cause serious damage to your electrical equipment. The Torrium2 fitted to this pump has a metal oxide varistor (MOV) fitted to help protect it's circuit. This MOV is a "sacrificial" device, meaning that it effectively is gradually damaged every time it takes a surge. The MOV is not a lightning arrestor and may not protect the Torrium2 if lightning or a very powerful surge hits the pump unit.

If the installation is subject to electrical power surges or lightning we strongly recommend the use of suitable additional surge protection devices on ALL electrical equipment.

The Surge Protector status window allows you to check the status of the inbuilt MOV in the Torrium2 there is a viewing window at the back of the Torrium2 above the power lead entry / exit grommet. The MOV is the blue disc shaped component. Should it be consumed due to power spikes it will almost always blacken the viewing port. This will indicate a non-warrantable failure.

NOTE: For protection, the Davey pump motors are fitted with an automatic reset thermal overload, constant tripping of this overload indicates a problem e.g. low voltage at pump, excessive temperature (above 50°C) in pump enclosure.

Pipe Connections

For best performance use P.V.C. or polythene pipes at least the same diameter as the pump's inlet and delivery outlet openings. Larger diameter pipe may be used to minimise resistance to flow when pumping longer distances.

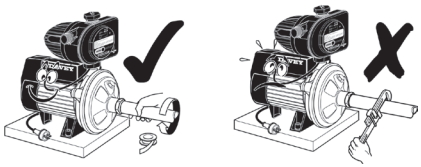

Do not use pipe thread sealing compounds on any part of this pump. ONLY use Teflon sealing tape.

DO NOT USE THREAD SEALING COMPOUNDS, HEMP OR PIPE DOPE!

Use unions at pipe connections to enable easy removal and servicing. Use sufficient tape to ensure airtight seal and hand tighten only. To prevent strain on pump threads always support heavy inlet and outlet pipes. If there is a likelihood the water supply may contain solid particles such as pieces of plant or vegetable matter, a filter should be installed before the pump to avoid blocking of water ways. Lay suction pipe at a constant gradient to avoid air pockets which may reduce pump efficiency.

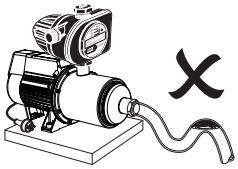

NOTE: Suction leaks are the largest cause of poor pump performance and are difficult to detect. Ensure all connections are completely sealed using thread tape only.

Flexible pipe should be considered to allow for movement between building, pump and/or water supply. Braided hose, reinforced hose or polythene pipe are suitable.

Water Hammer

In applications where fast-acting valves are present, water hammer may be a concern. The installation of a pressure vessel will assist in reducing water hammer. This will reduce the likelihood of damage to infrastructure. Pressure tanks are sold separately.

Extra Draw-off Capacity

The Torrium2 controller has an in-built accumulator which will accommodate small leaks. In some applications it may be appropriate to install additional accumulator (Supercell pressure tank) capacity. These applications includes:

- Long suction lines (see Suction Lines / Lift)
- Low flow appliances connected to the pump, such as evaporative air conditioners, slow filling toilet cisterns, etc.

Any additional accumulators can be installed downstream of the controller (ie. between the controller and the first outlet).

Where extra draw-off capacity is utilised the additional pressure tank should have a pre-charge of 70% of the maximum system (shut-off) pressure.

Evaporative coolers, RO filters and extra draw-off capacity

Where a Torrium2 equipped pump is required to supply water to an evaporative cooler, reverse osmosis (R.O.) filter or similar low flow device, the Torrium2 will detect the limited demand. This will result in the Torrium2 adapting to the slow demand. The pump start pressure will be allowed to drop to a lower cut in pressure each time low flows are detected. To provide the maximum draw-off from the additional pressure tank, the tank's pre-charge

should be set at 45% of the pump shut-off pressure.

If normal flow is required from your system, Torrium2 will initiate instant start.

Fit the Supercell pressure tank downstream of the controller.

Where to use Check Valves and Foot Valves

The Torrium2 controller has an inbuilt non-return (check) valve fitted. In flooded suction installations there is no need to have a suction non-return valve.

In suction lift installations a footvalve will normally be required for the pump to retain prime.

In some suction lift installations there may be good reason to modify the inbuilt check valve to ensure that the discharge pressure is also applied to the suction line and footvalve. This could be where the suction line was very long or where there was concern regarding a leaking footvalve. This may not always be applicable and it is acceptable to retain the inbuilt check valve in the Torrium2 on suction lifts with good suction plumbing.

Should the inbuilt check valve be required to be modified though, an additional accumulator should be fitted to the discharge pipework, to ensure the pump is not cycled on shut down. The size of this accumulator will depend on the size, length and type of pipe used on the suction.

To modify the check valve for suction lift conditions, follow these simple steps:

Torrium2 Check Valve Removal

1. Remove Torrium2 cap and turn over cap. Lugs on cap will engage check valve to unscrew



2. Roll off o-ring
3. Re-install check valve



4. Tighten check valve using inverted priming cap and replace priming cap



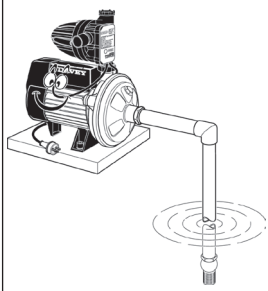

Installations with flooded suction require a gate or isolating valve so water supply can be turned off for pump removal and servicing.

After half an hour of constant running, Torrium2 will turn off the pump briefly. This momentary pause is completely normal and is the controller confirming that there's still water demand.

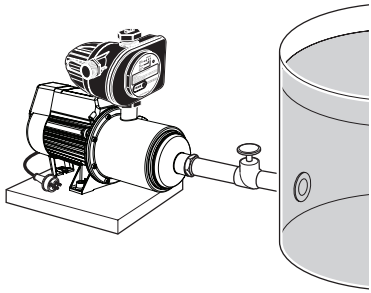

Abrasive Materials
The pumping of abrasive materials will cause damage to the pressure system which will then not be covered by the guarantee.

For Automatic Pressure Pumps Installed with a Mains Pressure Hot Water System

To protect your system from damage caused by back pressure from hot water systems. You should always have installed on the hot water inlet an approved non-return valve.

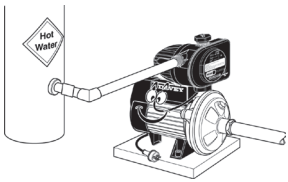

NOTE: Always ensure hot water systems are installed in compliance with manufacturers recommendations and in accordance with all local regulations.

Connection of Mains Scheme or Town Water Supply to either Suction or Discharge of Pumps & Pressure Systems

Most Water Supply Authorities have strict regulations regarding direct connection of pumps to mains water supplies. In most cases an isolating tank is required between mains supply and pump. Davey also recommend this method. Directly applied mains pressure can exceed pump operating pressure and damage pump.

Davey Water Products Pty Ltd can not accept responsibility for loss or damage resulting from incorrect or unauthorised installations.

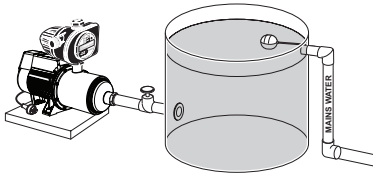

Priming and Operation

The Torrium2 module fitted to your Davey pump is provided with a push button “Prime” button. This button is used during initial priming of the pump and also acts as a reset button if the Torrium2 switches out in pump protection mode.

1. Remove priming plug and fill casing and suction line “see diagram on page 2 to locate priming port”. On flooded suction, simply open gate valve to pump. When full, replace priming plug.

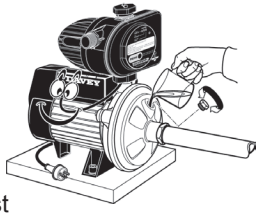

2. Ensure outlet nearest to pump is open.

3. Ensure all valves in suction line are open.

4. Switch on power - The status indicator light will be illuminated green and the pump will run. A full flow of water should be discharged from the open tap.

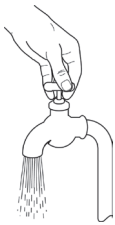

5. If the pump stops with the tap open see troubleshooting checklist.

6. Close the open outlet or tap and the pump should stop after a few seconds (the status indicator light should be illuminated red (constant). If not, consult the troubleshooting checklist.

To Reset if Pump switches out in Pump Protection Mode

1. Make sure pump is primed.
2. Open tap, push prime button.
3. Close tap and pump will stop.

Maintenance



WARNING : Under no circumstances should Torrium2 controller be disassembled. Failure to observe this warning will expose persons to the possibility of personal injury and may also result in damage to other property. Do not dismantle, no user serviceable parts, spring under pressure.

The only regular attention your new pressure system may require will be if you have used an additional pressure tank. Depending on the tank used you may need to check the pressure tank's air charge every 6 months. Follow the instructions applicable to each tank.

Trouble Shooting Check List

a) PUMP HAS STOPPED OR MOTOR RUNS FOR SHORT PERIOD ONLY WHEN SWITCHED ON OR PRIME BUTTON PUSHED, BUT DOES NOT PUMP - YELLOW STATUS INDICATOR LIGHT ILLUMINATED.

1. Suction line and pump body not filled with water.
2. Air leaks in suction lines or suction pipe not under water.
3. Air trapped in suction lines (also possible with flooded suction due to uneven rise in piping; eliminate humps and hollows).
4. No water at source or water level too low.
5. Valve on suction lines closed. Open valve & pump will restart automatically or press "Prime" button.

b) PUMP SWITCHES ON AND OFF FREQUENTLY (CYCLING)

1. Cycling may occasionally be caused by float valves filling tanks.
2. Leaking taps, float valves etc. check plumbing.
3. Leaking check valve/foot valve.

c) MOTOR DOESN'T START WHEN SWITCHED ON - INDICATOR LIGHTS <u>NOT</u> ILLUMINATED

1. Power not connected or no power available from supply outlet.



WARNING: Automatic reset thermal overloads may allow the pump to restart without warning. Always disconnect the pump motor from the electrical supply before maintenance or repairs.



WARNING: When servicing or attending pump and/or controllers, always ensure power is switched off and lead unplugged. Electrical connections should be serviced only by qualified persons. If the electrical supply lead of this pressure system is damaged, it must be replaced by the manufacturer or its service agent.

d) MOTOR STOPS - YELLOW STATUS INDICATOR LIGHT <u>IS</u> ILLUMINATED.

1. Motor "over temperature" cut-out tripped. Consult Davey dealer.
2. Motor not free to turn - e.g. a jammed impeller. Consult Davey dealer.
3. Prime button has been held in for too long. Release prime button and switch off power for 1 minute to allow unit to reset.
4. Your Torrium2 has detected high water temperature in the pump. Once the water has cooled the Torrium2 will automatically restart the pump.

e) PUMP WILL NOT STOP

1. Water leaks on discharge side of pump.

f) PUMP WILL OPERATE NORMALLY INITIALLY BUT WILL NOT RESTART ON WATER DEMAND - STATUS INDICATOR LIGHT <u>NOT</u> ILLUMINATED

1. Power supply problem - see c) 1.

g) PUMP WILL OPERATE NORMALLY INITIALLY BUT WILL NOT RESTART ON WATER DEMAND - YELLOW STATUS INDICATOR LIGHT <u>IS</u> ILLUMINATED.

1. Suction air leak - pump has partially lost prime.
2. Blocked impellers or suction.
3. Discharge valve closed - open valve.



NOTE: The Torrium2 controller is adaptive. If your pump draws air or is subject to blockage, the Torrium2 adapts to its new maximum pressure. This may result in your system pressure not dropping below the new cut-in pressure and your pump not starting. This is more likely to occur when boosting mains pressure. Should this occur, re-prime your pump unit. Should this not prove successful, it is likely you have a blockage in the pump. You should contact your Davey dealer for assistance.



NOTE:

a) **For protection, the Davey® pump motor is fitted with an automatic "over temperature" cut-out. Constant tripping of this overload device indicates a problem e.g. low voltage at pump, excessive ambient temperature (above 50°C) in pump enclosure.**

b) **The Torrium2 control device may have to be reset after rectifying any of the above operating troubles. This is done by pushing in the "prime" button and releasing it after 2 seconds, or switching the power supply off then on.**



Care should also be taken when servicing or disassembling pump to avoid possible injury from pressurised water. Unplug pump, relieve pressure by opening a tap on the discharge side of the pump and allow any hot water in the pump to cool before attempting to dismantle.



During servicing, use only approved, non-petrochemical based oring and gasket lubrication. If unsure, consult your Davey Dealer for advice.



WARNING: Do not use hydrocarbon based or hydrocarbon propelled sprays around the electrical components of this pump.



In accordance with AS/NZS 60335.2.41 we are obliged to inform you that this pump is not to be used by children or infirm persons and must not be used as a toy by children.

Davey Warranty (Inside the USA)

Davey Water Products come with guarantees that cannot be excluded under the local country Law. You are entitled to a replacement, or refund for a major failure and compensation for any other reasonably foreseeable loss, or damage. You are also entitled to have the goods repaired or replaced if the goods fail to be of acceptable quality and the failure does not amount to a major failure.

Davey Water Products Pty Ltd (Davey) of 6 Lakeview Drive Scoresby VIC 3179 provides the following warranty in relation to this product:

1. The guarantee period commences on either the date of installation or the original purchase of the equipment (whichever is the later). Evidence of this date must be provided when claiming repairs under guarantee. It is recommended you retain all receipts in a safe place.
2. Davey products are warranted, subject to the exclusions and limitations below, to the original user only to be free of defects in material and workmanship for a period of 36 months from date of installation or sale with a proof of a receipt, but no more than 48 months from the date of manufacture. Davey's liability under this warranty shall be limited to repairing or replacing at Davey's option, without charge, FOB Davey's authorized service agent. Davey will not be liable for any cost of removal, installation, transport or any other charges that may arise in connection with the warranty claim. Product eligible for repair or replacement by the authorized Davey service agent, in accordance with Davey's warranty terms, shall be shipped back to the customer from the service center at Davey's cost.
3. This guarantee is subject to due compliance by the original purchaser with all directions and conditions set out in the Installation and Operating Instructions. Failure to comply with these instructions, damage or breakdown caused by fair wear and tear, negligence, misuse, accident, incorrect installation, inappropriate chemicals or additives in the water, inadequate protection against freezing, rain or other adverse weather conditions, corrosive or abrasive water, lightning or high voltage spikes or through unauthorized persons attempting repairs are not covered under guarantee. The product must only be connected to the voltage shown on the nameplate.
4. Davey shall not be liable for any loss of profits or any consequential, indirect or special loss, damage or injury of any kind whatsoever arising directly or indirectly from the product or any defect, and the purchaser shall indemnify Davey against any claim by any other person whatsoever in respect of any such loss, damage or injury.
5. Some states do not allow the exclusion or limitation of incidental or consequential damages or limitations on how long an implied warranty lasts, so the above limitations or exclusions may not apply to you. The warranty gives you specific legal rights and you may also have other rights which vary from state to state.
6. This guarantee applies to all states and territories of United States of America and Canada only.

® Davey and Torrium are registered trademarks of Davey Water Products Pty Ltd.
© Davey Water Products Pty Ltd 2020.

USA
Have installation questions or problems?
Need warranty?
Before returning this product to your dealer contact a Davey Authorized Service Centre in the USA by calling

866.328.7867 or visit daveywater.com

Davey Warranty (Outside the USA)

Davey Water Products Pty Ltd (Davey) warrants all products sold will be (under normal use and service) free of defects in material and workmanship for a minimum period of one (1) year from the date of original purchase by the customer as marked on the invoice, for specific warranty periods for all Davey products visit daveywater.com.

This warranty does not cover normal wear and tear or apply to a product that has:

- been subject to misuse, neglect, negligence, damage or accident
- been used, operated or maintained other than in accordance with Davey's instructions
- not been installed in accordance with the Installation Instructions or by suitably qualified personnel
- been modified or altered from original specifications or in any way not approved by Davey
- had repairs attempted or made by other than Davey or its authorised dealers
- been subject to abnormal conditions such as incorrect voltage supply, lightning or high voltage spikes, or damages from electrolytic action, cavitation, sand, corrosive, saline or abrasive liquids,

The Davey warranty does not cover replacement of any product consumables or defects in products and components that have been supplied to Davey by third parties (however Davey will provide reasonable assistance to obtain the benefit of any third-party warranty).

To make a warranty claim:

- If the product is suspected of being defective, stop using it and contact the original place of purchase. Alternatively, phone Davey Customer Service or send a letter to Davey as per the contact details below
- Provide evidence or proof of date of original purchase
- If requested, return the product and/or provide further information with respect to the claim. Returning the product to the place of purchase is at your cost and is your responsibility.
- The warranty claim will be assessed by Davey on the basis of their product knowledge and reasonable judgement and will be accepted if:
  - a relevant defect is found
  - the warranty claim is made during the relevant warranty period; and
  - none of the excluded conditions listed above apply
- The customer will be notified of the warranty decision in writing and if found to be invalid the customer must organise collection of the product at their expense or authorise its disposal.

If the claim is found to be valid Davey will, at its option, repair or replace the product free of charge.

The Davey warranty is in addition to rights provided by local consumer law. You are entitled to a replacement or refund for a major failure and compensation for any other reasonably foreseeable loss or damage. You are also entitled to have the goods repaired or replaced if the goods fail to be of acceptable quality and the failure does not amount to a major failure.

For any internet connected products the consumer is responsible for ensuring a stable internet connection. In the event of a network failure the consumer will need to address the concern with the service provider. Use of an App is not a substitute for the User's own vigilance in ensuring the product is working to expectation. Use of a Smart Product App is at the User's own risk. To the fullest extent permitted by law Davey disclaims any warranties regarding the accuracy, completeness or reliability of App data. Davey is not responsible for any direct or indirect loss, damage or costs to the User arising from its reliance on internet connectivity. The User indemnifies Davey against any claims or legal actions from them or others relying on internet connectivity or App data may bring in this regard.

Products presented for repair may be replaced by refurbished products of the same type rather than being repaired. Refurbished parts may be used to repair the products. The repair of your products may result in the loss of any user-generated data. Please ensure that you have made a copy of any data saved on your products.

To the fullest extent permitted by law or statute, Davey shall not be liable for any loss of profits or any consequential, indirect or special loss, damage or injury of any kind whatsoever arising directly or indirectly from Davey products. This limitation does not apply to any liability of Davey for failure to comply with a consumer guarantee applicable to your Davey product under local laws and does not affect any rights or remedies that may be available to you under local laws.

For a complete list of Davey Dealers visit our website (daveywater.com) or call:

DAVEY

Davey Water Products Pty Ltd
A member of the Waterco Group
ABN 18 066 327 517

daveywater.com

AUSTRALIA

Head Office
6 Lakeview Drive,
Scoresby, Australia 3179
Ph: 1300 232 839
Fax: 1300 369 119
Email: sales@daveywater.com

NEW ZEALAND

7 Rockridge Avenue,
Penrose, Auckland 1061
Ph: 0800 654 333
Fax: 0800 654 334
Email: sales@dwp.co.nz

EUROPE
7 rue Eugène Hénaff 69200
Vénissieux, France
Ph: +33 (0) 4 72 13 95 07
Email: info@daveyeurope.eu

NORTH AMERICA
Ph: 1-888-755-8654
Email: info@daveyusa.com

MIDDLE EAST
Ph: +971 50 6368764
Fax: +971 6 5730472
Email: info@daveyuae.com

® Davey is a trademark of Davey Water Products Pty Ltd. © Davey Water Products Pty Ltd 2025.

P/N 49329-17

*** Installation and operating instructions are included with the product when purchased new. They may also be found on our website.**