OPERATORS MANUAL FOR Mi-T-M®

WC-SERIES

Water Cannon

CAUTION

RISK OF INJURY!

READ MANUAL BEFORE OPERATING!

This manual is an important part of the Water Cannon and must remain with the unit when you sell it!

©Copyright 2005, Mi-T-M Corporation®

37-0535-120419

CONTENTS

INTRODUCTION 3
CONTENTS 4
SPECIFICATIONS 4
IMPORTANT SAFETY WARNINGS 5-7
FLOW CHART 8
DESCRIPTION OF WATER FLOW 9
FEATURES 10-11
INSTALLATION 12-13
PRE-START CHECKLIST 14
OPERATION 15
TROUBLESHOOTING 16-17
ACCESSORIES 18
STATEMENT OF WARRANTY 19

⚠ WARNING

⚠ WARNING: This product can expose you to chemicals including Lead, which is known to the State of California to cause cancer and birth defects or other reproductive harm. For more information go to www.P65Warnings.ca.gov

⚠ WARNING

⚠ WARNING: This product can expose you to chemicals including carbon monoxide, which is known to the State of California to cause birth defects or other reproductive harm. For more information go to www.P65Warnings.ca.gov

INTRODUCTION

Congratulations on the purchase of your new Mi-T-M Water Cannon! Mi-T-M Water Cannons are designed to be the pre-wash phase of a heavy duty cleaning system. The Water Cannon sprays high volumes of water, ranging from 100 to 300 gallons per minute, onto large equipment. The immense flow of water easily removes excess dirt and grime, bringing the equipment to a stage capable of being cleaned by a pressure washer.

Mi-T-M Water Cannons can be used in a variety of environments, including:

Rental Yards
Heavy Equipment Dealers
Trucking Facilities
Military Bases
Truck Rental Fleets
Forklift Washing Operations
Aircraft Maintenance & Restoration
Shipyards
Mining Operations

The information in this operator's manual was compiled for your benefit. By reading and following the simple safety, installation, operation, maintenance and troubleshooting steps described in this manual, you will receive years of trouble free operation from your new Mi-T-M Water Cannon. The contents of this manual are based on the latest product information available at the time of publication. Mi-T-M reserves the right to make changes in price, color, materials, equipment, specifications or models at any time without notice.

! IMPORTANT !

These paragraphs are surrounded by a "SAFETY ALERT BOX". This box is used to designate and emphasize Safety Warnings that must be followed when operating this Water Cannon. Accompanying the Safety Warnings are "signal words" which designate the degree or level of hazard seriousness. The "signal words" used in this manual are as follows:

***DANGER*: Indicates an imminently hazardous situation which, if not avoided, WILL result in death or serious injury.**

***WARNING*: Indicates a potentially hazardous situation which, if not avoided, COULD result in death or serious injury.**

***CAUTION*: Indicates a potentially hazardous situation which, if not avoided MAY result in minor or moderate injury.**



The symbol set to the left of this paragraph is a "Safety Alert Symbol". This symbol is used to call attention to items or procedures that could be dangerous to you or other persons using this equipment.

ALWAYS PROVIDE A COPY OF THIS MANUAL TO ANYONE USING THIS EQUIPMENT. READ ALL INSTRUCTIONS BEFORE OPERATING THIS WATER CANNON AND ESPECIALLY POINT OUT THE "SAFETY WARNINGS" TO PREVENT THE POSSIBILITY OF PERSONAL INJURY TO THE OPERATOR.

Once the unit has been uncrated, immediately write in the serial number of your unit in the space provided below.

SERIAL NUMBER_____

Inspect for signs of obvious or concealed freight damage. If damage does exist, file a claim with the transportation company immediately. Be sure that all damaged parts are replaced and that the mechanical and electrical problems are corrected prior to operation of the unit. If you require service, contact Mi-T-M Customer Service.

CALL OUR TOLL-FREE NUMBER

800-553-9053

for the Sales or Service Center nearest you!

Please have the following information available for all service calls:

1. Model Number
2. Serial Number
3. Date and Place of Purchase

CONTENTS OF THE WATER CANNON

Carefully unpack your new Mi-T-M Water Cannon. Contact the freight line if a damage claim is required on any component. The following items are the basic equipment sent with your Water Cannon.

1. Remote Control Start/Stop
2. Float Level Controls
   a. Low water float (blue).
   b. Fresh water float (red).
3. Manual
4. Surge Suppressor (for WC-300-0ME3 only).

OPTIONS:
Check Valve (Flapper Type)
Gate Valve
Suction Strainer
Monitor
Hose Reel for 100' hose
Hose- 100' x 1 1/2"
Nozzle- Adjustable
Nozzle- Smooth Bore
Bale- Ball Shutoff

SPECIFICATIONS

MODEL #	WC-100-0ME3	WC-150-0ME3	WC-300-0ME3	WC-400T-0ME3
FLOW (GPM)	100	150	300	400
PSI	60	80	90	125
HORSEPOWER	7.5	15	40	50
VOLTAGE	208-230	208-230	208-230	208-230
AMPERAGE	24	45	112	116
HZ.	60	60	60	60
PHASE	3	3	3	3
INLET	2” NPT	3” NPT	5” FLANGED	4” FLANGED
OUTLET	2” NPT	2.5” NPT	3” NPT	3” NPT
OPTIONS	WX-0002 (460V/12 AMPS)	WX-0003 (460V/22 AMPS)	WX-0004 (460V/50 AMPS)	460V/58 AMPS
UNIT DIMENSIONS L x W x H	42 X 20 X 66	45 X 21 X 67	58 X 28 X 75	58 X 28 X 75
UNIT WEIGHT (LBS.)	500	650	1,110	1,178

IMPORTANT SAFETY WARNINGS

WARNING: WHEN USING THIS PRODUCT, BASIC PRECAUTIONS SHOULD ALWAYS BE OBSERVED, INCLUDING THE FOLLOWING:

READ ALL SAFETY WARNINGS BEFORE USING YOUR Mi-T-M WATER CANNON

HAZARD	POTENTIAL CONSEQUENCE	PREVENTION
RISK OF ELECTRIC SHOCK OR ELECTROCUTION 	Serious injury or death could occur if the Water Cannon is not properly grounded. Your Water Cannon is powered by electricity and may cause electric shock or electrocution if not installed properly.	Installation of this unit, including all electrical connections, must comply with all local, state and national codes. This product must be grounded. Connect to a GFCI circuit breaker when available. If the unit should malfunction or breakdown, grounding provides a path of least resistance for electric current to reduce the risk of electric shock. Do not ground to a gas supply line. Improper connection of the equipment-grounding conductor can result in a risk of electrocution. Check with a qualified electrician or service personnel if you are in doubt as to whether the system is properly grounded. Always be certain the unit is receiving proper voltage (+/- 5% of the voltage listed on the nameplate). Before installing electrical connections, be certain the power switches are in the "OFF" position. Keep all connections dry.
	Electrical shock may occur if the Water Cannon is not operated properly.	DO NOT spray on or into electrical installations of any kind! This includes electrical outlets, light bulbs, fuse boxes, transformers, the water cannon itself, etc.. DO NOT allow metal components of the Water Cannon to come in contact with live electrical components. Never operate the Water Cannon with safety guards/covers removed or damaged. Ensure all electrical covers are securely in place when unit is operating.
	Serious injury or death may occur if electrical repairs are attempted by unqualified persons.	Any electrical wiring or repairs performed on this Water Cannon should be done by Authorized Service Personnel in accordance with National and Local electrical codes. Before opening any electrical enclosure, always shut off the Water Cannon. Disconnect the Water Cannon from the power source. If the power disconnect is not in sight, lock it in the open position and tag it to prevent power usage. (Never assume the Water Cannon is safe to work on just because it is not operating! Always disconnect from the power source.)

IMPORTANT SAFETY WARNINGS

READ ALL SAFETY WARNINGS BEFORE USING WATER CANNON

HAZARD	POTENTIAL CONSEQUENCE	PREVENTION
RISK OF EXPLOSION OR FIRE 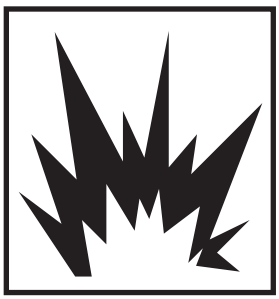 	Serious injury or death could occur from an explosion or fire caused by a system electric spark.	This unit must be placed in an area that is well ventilated, free of flammable vapors, combustible dust, gases or other combustible materials.
RISK OF BURSTING 	Serious injury or death could occur from bursting caused by excessive pressure in the system. Serious injury may occur if attempting to start the Water Cannon when the pump is frozen.	Do not use this Water Cannon to pump flammable material! An explosion could occur. In freezing temperatures, the unit must be protected from freezing. Do not start the Water Cannon if it has been in a freezing environment without first allowing the pump to thaw.
RISK OF BURNS 	Serious injury may occur from touching the electrical motor. This area can remain hot for some time after the Water Cannon is shutdown.	Never allow any part of your body to contact the electrical motor until cooled.
RISK FROM MOVING PARTS 	Serious injury may occur to the operator from moving parts on the Water Cannon.	Do not operate the unit without all protective covers in place. Follow the maintenance instructions specified in the manual.

IMPORTANT SAFETY WARNINGS

READ ALL SAFETY WARNINGS BEFORE USING WATER CANNON

HAZARD	POTENTIAL CONSEQUENCE	PREVENTION
RISK OF INJECTION OR SEVERE CUTTING INJURY 	Serious injury or death could occur from water spray penetrating the skin.	Keep clear of nozzle and spray! Never put your hand, fingers or body directly over the spray nozzle. Never point the discharge spray at yourself or anyone else. Always keep operating area clear of all persons. SEEK EMERGENCY MEDICAL CARE if the spray appears to have penetrated the skin! DO NOT TREAT AS A SIMPLE CUT!! Hoses should be inspected daily for signs of wear. If evidence of failure exists, promptly replace all suspect hoses to prevent the possibility of injury from the spray. If a hose or fitting is leaking, NEVER PLACE YOUR HAND DIRECTLY ON THE LEAK. Before removing the spray nozzle or servicing the unit, ALWAYS shut off the unit and release trapped pressure. (Even after you shut off the unit, there is pressurized water left in the pump and hose until you release it).
RISK OF BODILY INJURY 	Serious injury or death may occur from the contact force of an uncontrolled water nozzle. Serious injury can occur from loose debris being propelled at a high speed from the water nozzle. Injury may occur if the operator loses his balance caused by the thrust of water traveling through the water nozzle. Injury may occur from the water cannon.	Do not start or operate the unit until an operator is securely bracing the spray nozzle. ALWAYS wear protective goggles when operating the water cannon to shield the eyes from flying debris. DO NOT direct spray toward fragile materials such as glass. Shattering could occur. Stay alert-watch what you are doing. Do not operate the unit when fatigued or under the influence of alcohol or drugs. NEVER open the water nozzle unless securely braced. DO NOT overreach or stand on unstable support. Wet surfaces can be slippery, wear protective foot gear and keep good footing and balance at all times. NEVER open the water nozzle while on a ladder or roof. Do not direct spray at people or pets. The force of the water can knock a person down. DO NOT DRINK THE WATER IN THE WATER CANNON!! This is non-potable water and is not suitable for consumption. DO NOT allow children to operate this unit. Know how to stop the water cannon quickly. Be thoroughly familiar with controls. DO NOT leave the water cannon unattended. Shut off the water cannon before leaving.

!SAVE THESE INSTRUCTIONS!

WATER CANNON FLOW CHART

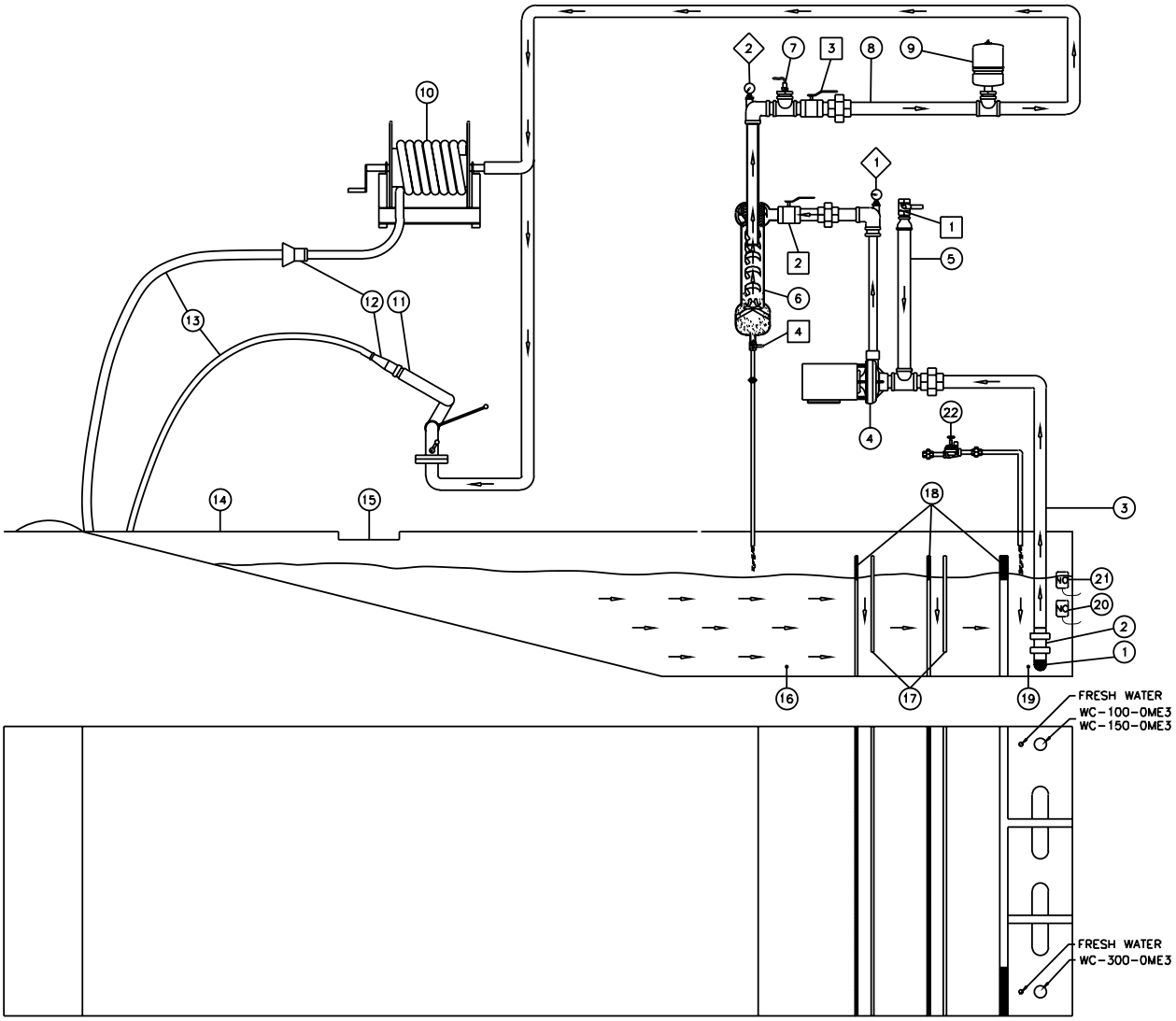

WC FLOW-063099-DCE

1. Inlet Filter/Strainer
2. Inlet Check Valve
3. Inlet Plumbing
4. Centrifugal Pump
5. Prime Chamber
6. Cyclone Separator (not available WC-400T-0ME3)
7. Flow Switch
8. Discharge Plumbing
9. Surge Suppressor
10. Hose Reel
11. Stationary Monitor
12. Nozzle
13. Spray Stream
14. Wash Pad
15. Collection Pit
16. Solids Collection Area
17. Weir
18. Screens
19. Sump Pit
20. Low Water Float
21. Fresh Water Float
22. Fresh Water Solenoid

Prime Valve 1
Inlet Valve 2
Discharge Valve 3
Separator Drain Valve 4

Pressure Gauge 1

Pressure Gauge 2

DESCRIPTION OF WATER FLOW

Water is drawn through the **Inlet Filter/Strainer (1)**, past the **Inlet Check Valve (2)** and into the **Inlet Plumbing (3)** when the **Centrifugal Pump (4)** is operating.

The **Centrifugal Pump (4)** will need to be primed at initial start-up or whenever the water is drained from the system. Open *Prime Valve 1* on the **Prime Chamber (5)** and fill the stand pipe with water. Close *Prime Valve 1* and start the **Centrifugal Pump (4)**. Water travels from the **Centrifugal Pump (4)**, through the *Inlet Valve 2* and into the **Cyclone Separator (6).**

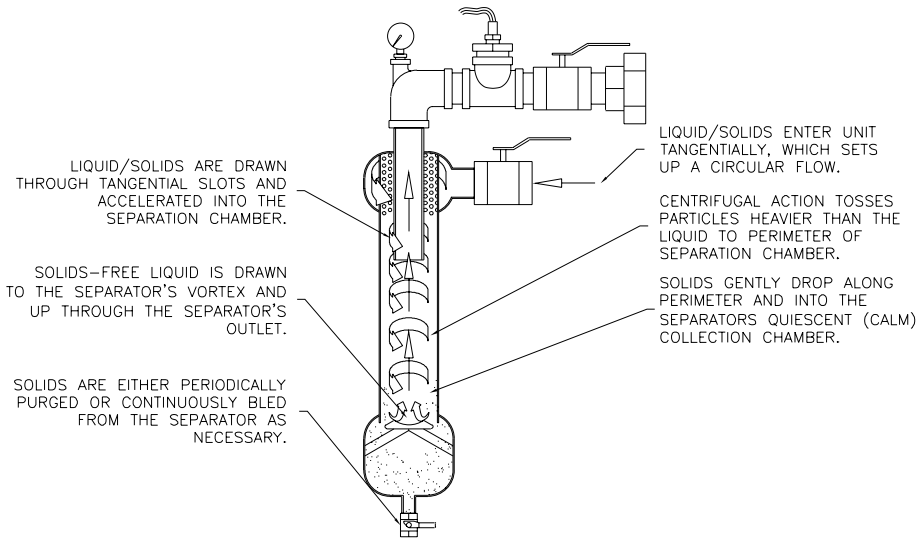

CYCLONE SEP-061599-DCE

Once inside the **Cyclone Separator (6)** (not available on WC-400T-0ME3), the water begins to accelerate in a downward circular motion. The force of the spiral action sends the heavier solid particles to the outer walls of the **Cyclone Separator (6)**. Once away from the spiraling action, the solid particles drop to the collection chamber where they are periodically purged from the *Separator Drain Valve 4* , positioned at the bottom of the **Cyclone Separator (6).** This *Separator Drain Valve 4,* controls the flow rate in which the separated solids flow back into the **Collection Pit (15)**. The spiraling water continues to move down the chamber until it reaches an inverted cone at the bottom of the chamber. This cone allows the *rotation* of the spiral to remain constant, but forces the *direction* of the spiral to move upward and through the center of the initial whirl.

The water then moves out of the top of the **Cyclone Separator (6)** and past a **Flow Switch (7)** that is designed to activate an adjustable timing circuit that will shut off the **Centrifugal Pump (4)** if there is low or no flow. If flow is sufficient, a **Centrifugal Pump (4)** pressure reading will register on **Pressure Gauge 1**. **Pressure Gauge 2** indicates the pressure after the **Cyclone Separator (6)**. After passing the two pressure gauges, the water travels through *Discharge Valve 3* and into the **Discharge Plumbing (8).**

NOTE: *The WC-300-0ME3 model is equipped with a **Shock Suppressor (9)** in the discharge plumbing to protect the system from pressure spikes. (The **Shock Suppressor (9)** is available as an Option for the WC-100-0ME3 & WC-150-0ME3).*

The **Discharge Plumbing (8)** directs the water to a workstation which will be equipped with a **Hose Reel (10)** or a **Stationary Monitor (11)** connected to a water **Nozzle (12)**. The force and volume of the **Spray Stream (13)** from the **Nozzle (12)** works to remove excess dirt from the equipment on the **Wash Pad (14)**, allowing dirt laden water to fall into the **Collection Pit (15)** placed next to the **Wash Pad (14)**. Heavier debris will fall to the bottom of the **Collection Pit (15)**, settling in the **Solids Collection Area (16)** while the remaining water continues to flow through several removable **Weirs (17)** equipped with debris collection **Screens (18)**. This process removes the heavier debris from the water as it returns to the **Sump Pit (19)**.

There are two floats in the **Sump Pit (19)** that register low water level.

- The **Low Water Float (20)** (blue and normally open in the down position) will turn off the **Centrifugal Pump (4)** to prevent cavitation when the water level is extremely low.
- The **Fresh Water Float (21)**) (red and normally closed in the down position) signals to open the **Fresh Water Solenoid (22)** to maintain the correct water level in the **Sump Pit (19)**.

100/150 GPM WATER CANNON FEATURES

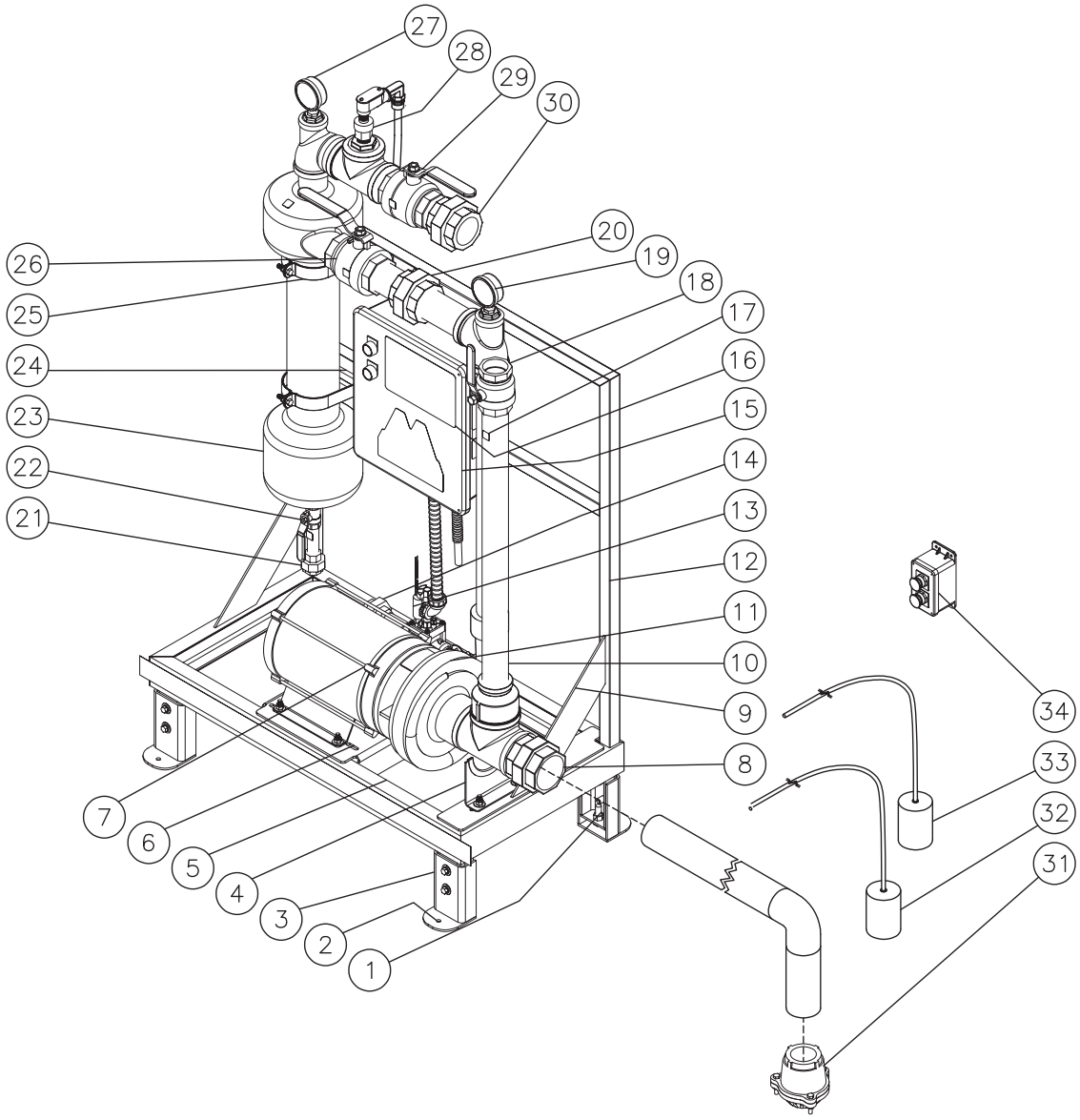

WC 150 FEATURE 111419

1. Leveling Bolt
2. Anchor Hole
3. Foot Level Support
4. Plumbing Support
5. Channel Iron
6. Base Plate w/Motor Slots
7. Electric Motor
8. Inlet Union
10. Prime Chamber
9. Angle Support
11. Centrifugal Pump
12. Square Tube
13. Fresh Water Solenoid
14. Fresh Water Unions
15. Control Panel
16. Decal-Warn/Caution/Operate
17. Decal-Valve & Gauge Numbers
18. Prime Valve
19. Inlet Pressure Gauge
20. Separator Inlet Union
21. Purge Union
22. Purge Valve
23. Cyclone Separator
24. Uni-Strut Bracket
25. Uni-Strut Clamp
26. Inlet Valve
27. Outlet Pressure Gauge
28. Flow Switch
29. Outlet Valve
30. Outlet Union
31. Metal Valve
32. Low Water Float (Blue)
33. Fresh Water Float (Red)
34. Remote Switch

300 GPM WATER CANNON FEATURES

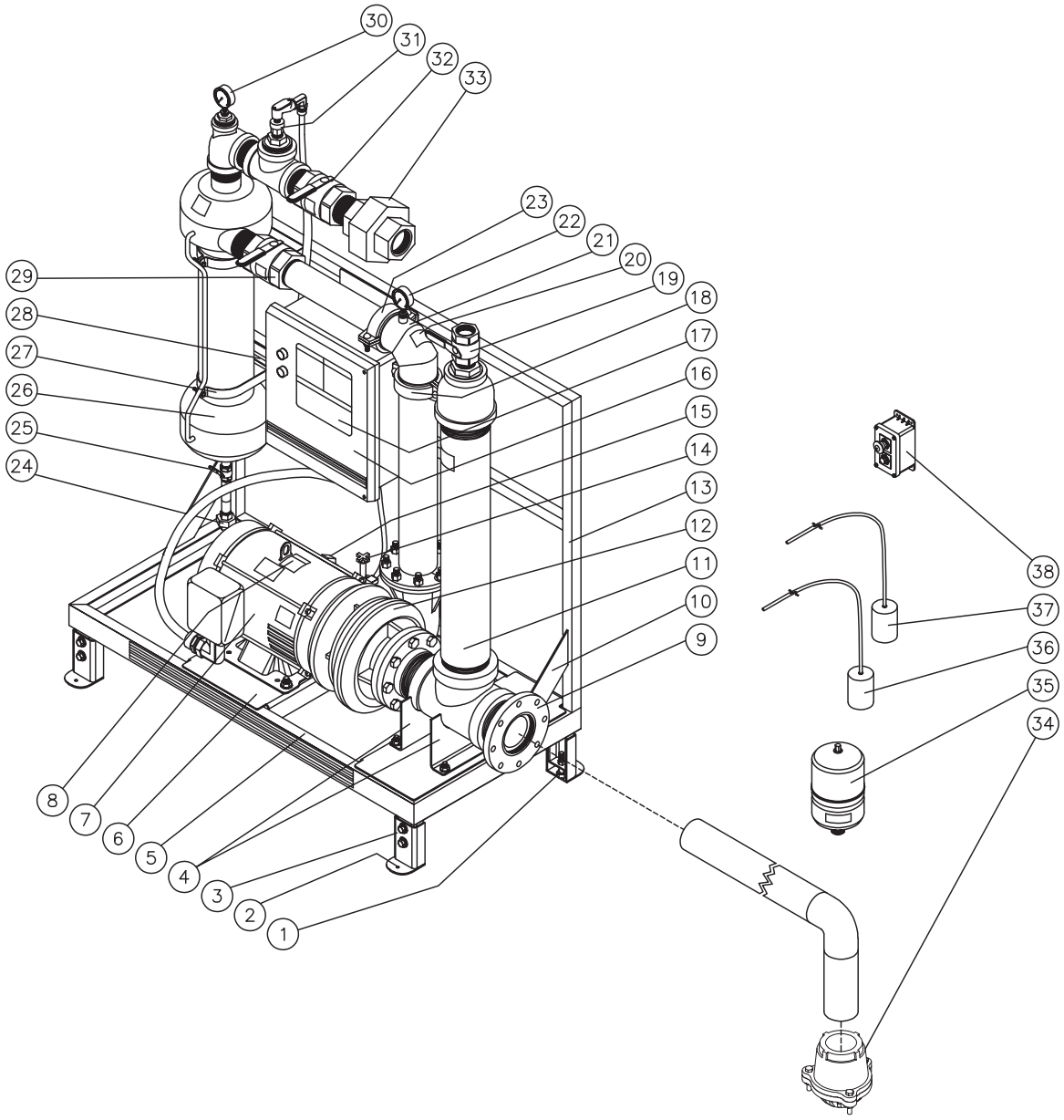

WC 300 FEATURE 111717 MLK

1. Leveling Bolt
2. Anchor Hole
3. Foot Level Support
4. Plumbing Support
5. Channel Iron
6. Base Plate
7. Electric Motor
8. Decal-Warning: Installation
9. Inlet Flange
10. Angle Support
11. Prime Chamber
12. Centrifugal Pump
13. Square Tube
14. Fresh Water Solenoid
15. Fresh Water Unions
16. Control Panel
17. Decal-Warn/Caution/Operate
18. Victaulic Union
19. Prime Valve
20. Decal-Valve & Gauge Numbers
21. Victaulic Drain "T"
22. Inlet Pressure Gauge
23. Separator Inlet Union
24. Purge Union
25. Purge Valve
26. Cyclone Separator
27. Uni-Strut Clamp
28. Uni-Strut Bracket
29. Inlet Valve
30. Outlet Pressure Gauge
31. Flow Switch
32. Outlet Valve
33. Outlet Union
34. Metal Valve
35. Shock Suppressor
36. Low Water Float (Blue)
37. Fresh Water Float (Red)
38. Remote Switch

INSTALLATION

INSTALLATION:

1. A collection pit system must already be an established structure before installing the Water Cannon. A well designed pit system is critical for the proper operation of the Water Cannon. Consult your Mi-T-M dealer for installation requirements.
2. Do not allow the Water Cannon to be exposed to freezing temperatures. If any part of the Water Cannon becomes frozen, excessive pressure may build up in the system creating a risk of bursting.
3. Place the Water Cannon in an enclosed area on a concrete surface next to the Collection Pit.
4. Install the appropriate floor anchors through the predrilled adjustable feet of the Water Cannon.
5. Use the bolts sized 1/2"-13, between the feet and feet levelers to level the Water Cannon. Lock the feet in position with the two bolts sized 3/8"-16.

DANGER

RISK OF UNIT BURSTING! DO NOT STORE/OPERATE UNIT IN FREEZING ENVIRONMENTS!

PLUMBING CONNECTIONS:

1. SUCTION LINE: Draws water from the collection pit for distribution throughout the Water Cannon system.
   a. Install the foot valve onto the Inlet Pipe in the collection pit.
   b. Connect the plumbing from the Water Cannon Pump Inlet to the Collection Pit.
2. FRESH WATER INLET & OUTLET: Draws water from an outside source for use in filling the collection pit in the event of evaporation.
   a. Connect the required plumbing to the Fresh Water Inlet and Outlet.
3. DISCHARGE LINE: Sends pressurized, filtered water to the Water Cannon nozzle.
   a. Connect the required plumbing from this outlet to the hose reel/ monitor.
4. PURGED WATER LINE: Sends filtered debris back to the collection pit.
   a. Plumb 3/4" back to the collection pit.

FLOAT CONNECTIONS:

1. Attach the two floats in the collection pit. Allow a 2" tether and enough room for them to move freely without interfering with the plumbing.
   a. FLOAT 1: Low Water Shut-off (Blue). Signals the system to shutdown when the pit water level is too low for proper operation.
      1. Attach this float above the suction strainer of the Water Cannon pump inlet.
   b. FLOAT 2: Fresh Water Float (Red). Signals the Fresh Water Makeup Solenoid to open or close to maintain the correct water level in the pit.
      1. Height of this float must be adjusted to the individual pit system.

INSTALLATION

ELECTRICAL CONNECTIONS:

1. A qualified electrician must install the electrical system.
   a. Verify the electrical supply at the power source is off.
   b. Run water tight conduit:
      1. From the Control Panel to the Remote box.
      2. From the local disconnect to the Control Panel. The electrician will need to drill holes in the Control Panel for the conduit.
   c. Wiring for the floats should be run through conduit to the box.
   d. Make connections to the terminal strips as shown below.
   e. Bump start the motor to ensure the rotation is going in the direction of the arrow decal affixed to the motor.

WARNING

RISK OF ELECTROCUTION!
ENSURE ALL CONNECTIONS ARE DRY AND THE POWER SUPPLY IS OFF.

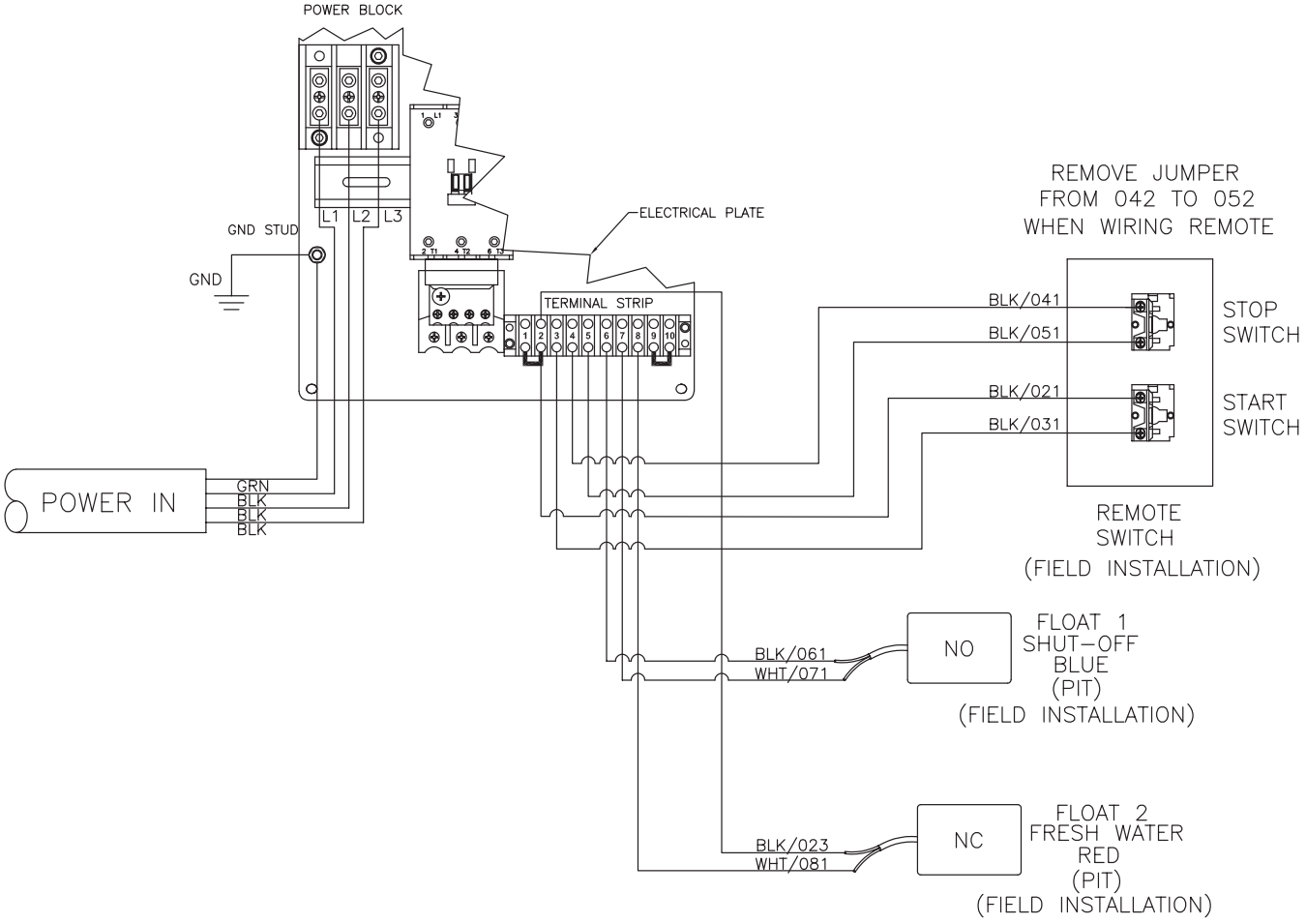

WC FIELD INSTALL 112817

STOP

TO ENSURE YOUR WATER CANNON OPERATES SAFELY AND EFFICIENTLY, COMPLETE THE PRE-OPERATION CHECKLIST BEFORE PROCEEDING.

PRE-OPERATION CHECKLIST

Before proceeding, answer all the questions on this checklist.	YES	NO
CODES:		
1. Does the electrical wiring meet all codes?		
2. Does plumbing meet all codes?		
LOCATION:		
1. Is the unit located on a hard level surface?		
2. Is the unit located in a large ventilated area?		
3. Is the unit located near the Sump Pit?		
ELECTRICAL:		
1. Is the unit properly grounded?		
2. Does the power supply, voltage and amperage match the data plate?		
3. Are the control floats, flow switch and remote switch(es) properly installed?		
4. Is the motor rotation correct?		
PLUMBING:		
1. Is the plumbing sized correctly?		
2. Is the check valve installed near the collection pit?		
3. Are all unions tightened?		
GENERAL:		
1. Have all operators using this unit read and understood this entire manual?		
2. Has the unit been installed by qualified service people who followed the instructions listed in this manual?		

IF "NO" WAS MARKED TO ANY OF THESE QUESTIONS, CORRECT THE SITUATION BEFORE OPERATING.

OPERATION

VALVE POSITION

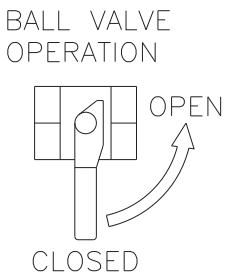

PRIMING THE SYSTEM:

1. Ensure the Sump Pit is filled with fresh water.
2. Position the valves on the Water Cannon system in the priming mode:

VALVE #		VALVE POSITION	USE
1	Prime.	Open.	Fills Prime Chamber to prime the pump.
2	Inlet.	Open.	Controls incoming water flow.
3	Discharge.	Open.	Controls outgoing water flow to nozzle.
4	Drain.	Closed.	Controls solids removal from system.

3. Ensure there is power to the Control Panel.
4. Fill the Prime Chamber with water. After filling, close Prime Valve 1.
5. Ensure an operator is holding the water nozzle / hose, and that it is pointed in a safe direction away from self or others.
6. Once the water nozzle is secure, press the green "Start" button on the Control Panel or the start button on the Remote to turn on the unit. DO NOT ALLOW THE MOTOR/PUMP TO RUN FOR MORE THAN 15 SECONDS WITHOUT A FLOW OF WATER. Repeat steps 2-6 until water exits the nozzle and the pressure gauge maintains an elevated pressure rating.

OPERATION:

1. Once the unit is primed, there will normally be a difference of 10 PSI between gauges 1 and 2. If not, slowly close the Discharge Valve #3 until the pressure Gauge 1 reads 10 PSI higher than Gauge 2.
2. Partially open the Separator Drain Valve 4 to allow collected debris to continually flush from the separator. (Degree may vary.)
3. Your Mi-T-M Water Cannon is now operating at maximum performance.
4. To completely purge the separator, fully open the Separator Drain Valve 4 and allow the system to purge for approximately 3 minutes. This should be done periodically to ensure the separator is completely flushed of debris.

NOTE: *A safety feature has been built into the unit which will cause a complete shutdown if there is no water flow for a set amount of time, roughly 30 seconds.*

SHUTDOWN:

1. The Water Cannon can be shutdown by pressing the red Stop button on the Control Panel or the Stop button on the Remote.

TROUBLESHOOTING

SYMPTOM	PROBABLE CAUSE	REMEDY
ELECTRICAL		
No power at the Control Panel.	Power failure to the Control Panel.	Check circuit breaker at power source or contact your local distributor.
	Improper or loose wire connections.	Check wire diagram/schematic.
CENTRIFUGAL PUMP		
Centrifugal Pump motor will not start or stops.	Circuit overload/breaker has tripped.	Reset breaker or replace fuse at power source.
	Improper or loose wire connections.	Check wire diagram/schematic.
	Improper or loose motor connections.	Check and tighten connections.
	Water Cannon motor overload.	Allow motor to cool. Reset overload.
	Water Cannon motor is defective.	Replace motor.
Centrifugal Pump motor hums but will not start.	Obstruction in pump.	Remove obstruction.
	3 phase motor supplied with Single phase.	Have electrician check and correct.
Centrifugal Pump won't prime.	Insufficient water in collection pit.	Add water or adjust floats.
	Lack of water in the pump housing.	Ensure all valves are in the correct position and the Prime Chamber is full of water.
	Blocked suction line or strainer.	Remove obstruction.
	Air leak in suction piping.	Correct air leak.
	Motor rotation is backward.	Have qualified electrician reverse rotation.
	No vacuum in pump.	Tighten all hardware on suction side of pump.
	Pump is obstructed.	Remove obstructions.
	Insufficient voltage.	Check voltage with voltmeter.
Centrifugal Pump has noisy operation.	Insufficient incoming water flow.	Blocked suction or strainer.
	Air leak in suction piping.	Correct air leak.
	Improper mounting causing vibration.	Ensure pump is mounted level with the unit base.
	Debris in pump.	Clean.
	Undersized suction.	Correct pipe size or throttle discharge.
Centrifugal Pump has low output.	Blocked suction line or strainer.	Remove obstruction.
	Air leak in suction piping.	Correct air leak.
	Suction lift too high.	Adjust plumbing.
	Plugged or restricted impeller.	Correct restriction.
	Low operating speed.	Correct voltage.
	Discharge line from Water Cannon is obstructed.	Remove obstruction.
	Pump is not primed.	See Priming Instructions, pg. 15.
	Plumbing is obstructed or too small.	Remove obstruction or use larger plumbing.
	Scale buildup in metal piping.	Clean or replace.

TROUBLESHOOTING

SYMPTOM	PROBABLE CAUSE	REMEDY
SHAFT SEALS		
Water is leaking at pumps.	Damaged stationary shaft seal.	Seal ran dry. Ensure seal chamber is filled with liquid.
Short seal life.	Unexpected temperature and chemical usage.	Replace.
WATER FLOW		
Air shoots from Water Outlet.	This is a common occurrence while pump is priming.	Air will stop shooting from the water outlet when pump is primed.|
Make-up water will not turn off.	Solenoid failure / float stuck.	Repair or replace.

ACCESSORIES

PART #	DESCRIPTION	WC-100-0ME3	WC-150-0ME3	WC-300-0ME3
50-2001	Hose Reel for 100' hose	X	X	--
15-2001	Hose-100' x 1 1/2"	X	X	--
18-2003	Nozzle-Adjustable	--	--	X
18-2006	Monitor	--	--	X
18-2005	Gate Valve	--	--	X
18-2009	Nozzle-Adjustable	X	X	--

STATEMENT OF WARRANTY

Mi-T-M warrants all parts (except those referred to below) of your new Water Cannon to be free from defects in materials and workmanship for one year from the date of original purchase.

Defective parts not subject to normal wear and tear will be repaired or replaced at Mi-T-M's option during the warranty period. In any event, reimbursement is limited to the purchase price paid.

EXCLUSIONS

1. Normal wear parts:

Seals	Filters
O-rings	Gaskets

2. Parts damaged due to:
   -normal wear, misapplication, modifications/alterations, abuse,
   -operation at other than recommended speeds, pressures or temperature,
   -the use of caustic liquids,
   -chloride corrosion or chemical deterioration,
   -fluctuations in electrical or water supply,
   -operating unit in an abrasive, corrosive or freezing environment.

3. Parts damaged by failure to follow recommended:
   -installation, operating and maintenance procedures.

4. This warranty does not cover the cost of:
   -normal maintenance or adjustments,
   -labor charges,
   -transportation charges to Service Center,
   -freight damage.

5. The use of other than genuine Mi-T-M parts will void warranty. Parts returned, prepaid to Mi-T-M's factory or to an Authorized Service Center will be inspected and replaced free of charge if found to be defective and subject to warranty. There are no warranties which extend beyond the description of the face hereof. Under no circumstances shall Mi-T-M bear any responsibility for loss of use of the unit, loss of time or rental, inconvenience, commercial loss or consequential damages.

Manufactured by Mi-T-M
50 Mi-T-M Drive, Peosta IA 52068
563-556-7484/ Fax 563-556-1235