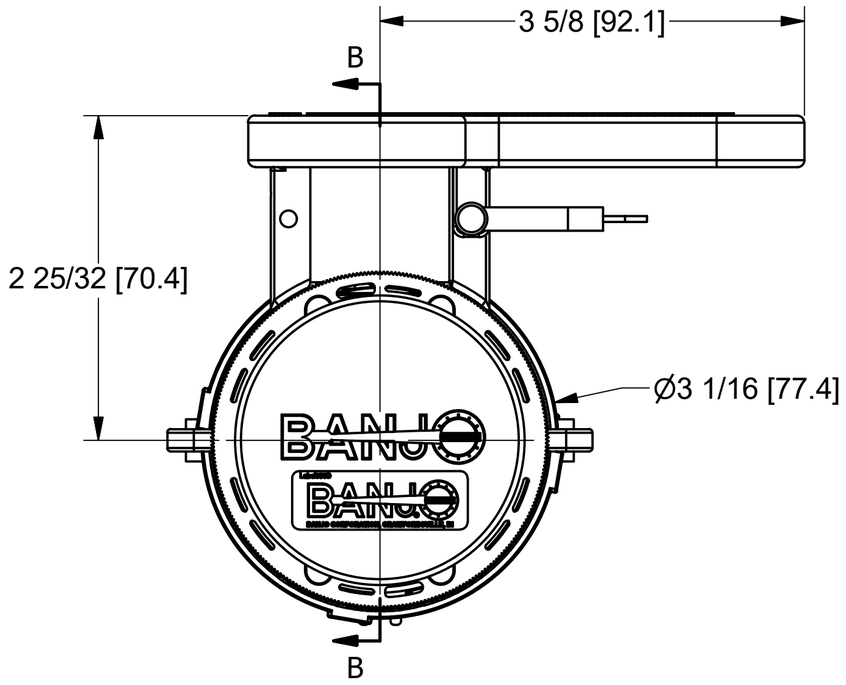

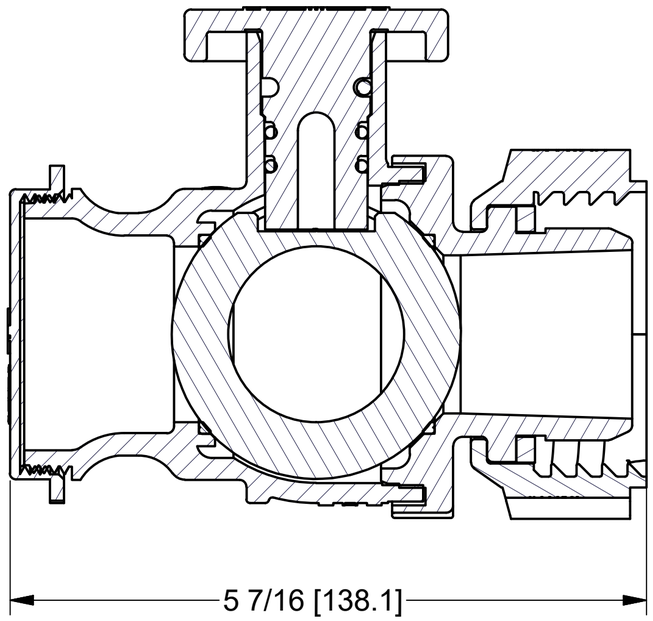

Parts List			
ITEM	QTY	PART NUMBER	DESCRIPTION
1	1	050DECAL	Banjo Logo Decal
2	1	201FPTX	2" NPT BLACK Cap
3	1	C25PFSLE113	Foil Seal 0.035" C25 FSLE 1-13 59mm
4	1	V22275G	VALVE GASKET
5	1	V22283C	MALE COLLAR HALF
6	1	V22283D	FEMALE COLLAR HALF
7	1	VL1004	EPDM DECAL
8	1	VS20209	SPRING-LOK SEAL
9	1	WS20002	Pin
10	1	WS20153	2" Handle for W Valve
11	2	WS20163E	#115 O'RING
12	1	WS20255T	2" TUMBLED VALVE BALL
13	1	WS22296	WELDED VALVE ENDPLATE
14	1	WSF20264	2" QDC WELD BODY

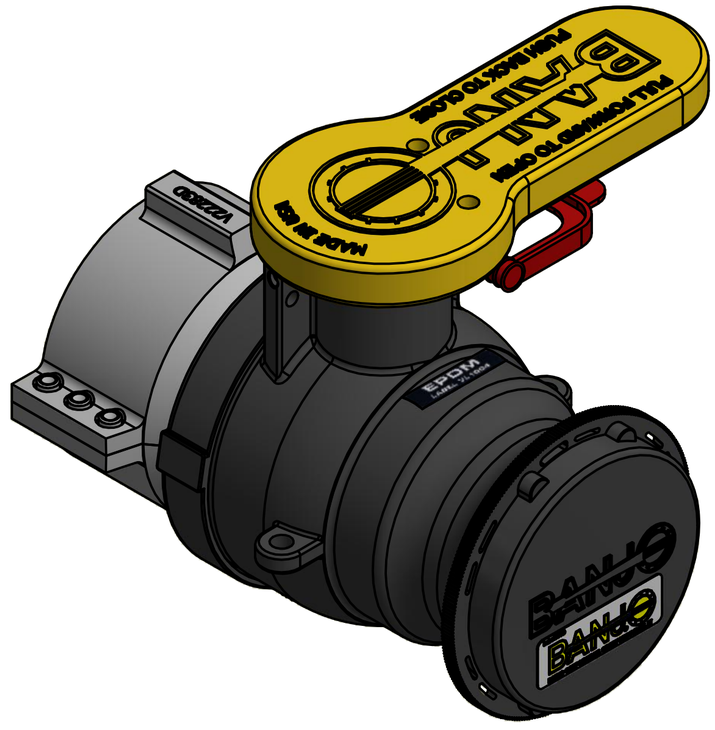

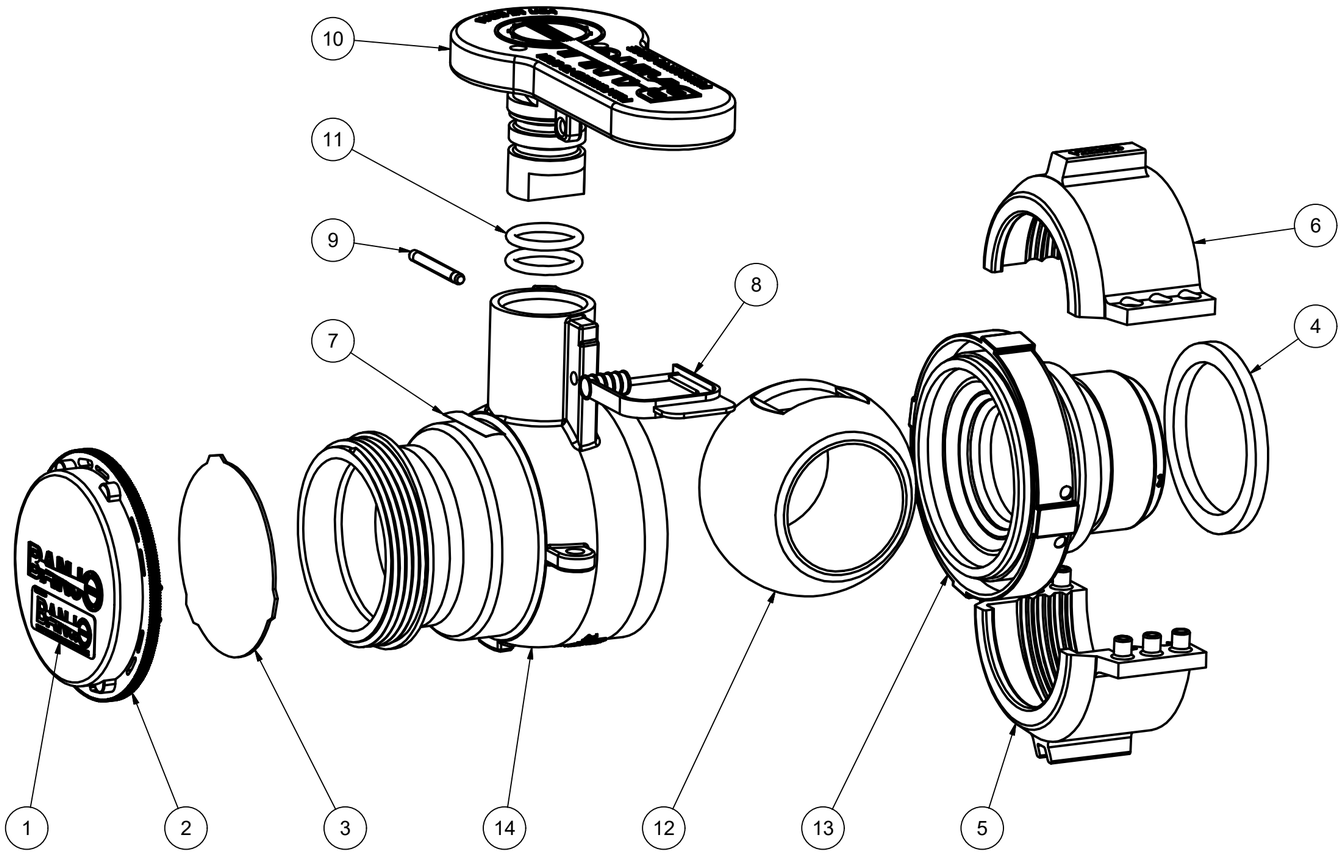

Welded valve. Individual parts shown not available for purchase.

THIS DRAWING AND ALL INFORMATION CONTAINED THEREON ARE THE EXCLUSIVE PROPERTY OF BANJO CORPORATION.

UNLESS SPECIFICALLY NOTED, THIS DRAWING AND ITEMS SHOWN ON THIS DRAWING ARE SUBJECT TO CHANGE AT ANY TIME.

BANJO CORPORATION
150 BANJO DRIVE, CRAWFORDSVILLE, IN 47933
WEB SITE: WWW.BANJOCORP.COM
E-MAIL: BANJOSALES@IDEXCORP.COM

DESCRIPTION
MAUSER 2"PLY VLV QD EPDM /CAP FOIL

PART NUMBER
W230240