ANNOVI REVERBERI®
The Power of Experience



VR-A 100.200 VR-A 100.300

REGULATION VALVES

Valvole di regolazione

Regulation valves
Valvole di regolazione

VR-A 100.200



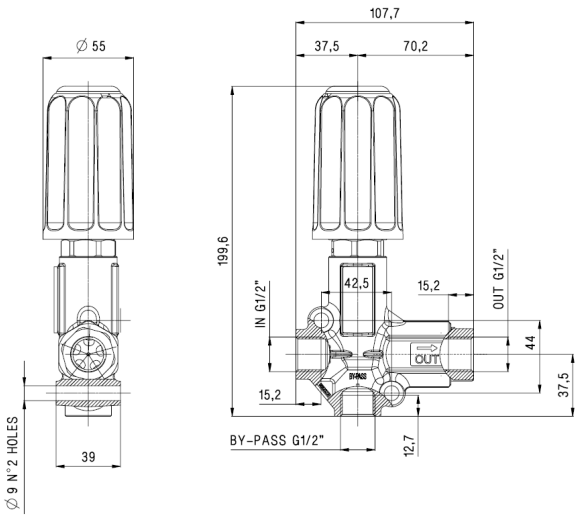

- Automatically relieves pressure from pump at shut-off
- Easy maintenance. The pressure regulating unit is fully removable from above
- Suitable for wall mounting by 2 screws
- Internal safety device/check valve to avoid overpressure
- NEW check valve design for enhanced flow quality

Suitable for **XWL - XWP - RGL - RGP - RTX - RTD** pumps series

MOD	COD	MAX		MAX				FITTINGS			KG NET
		l/min	gpm	bar	bar (permissible)	psi	psi (permissible)	IN	OUT	BY-PASS	kg
VR-A 100.200	**29413**	100	26.4	200	220	2900	3191	G 1/2" (F)	G 1/2" (F)	G 1/2" (F)	1.2

VR-A 100.300



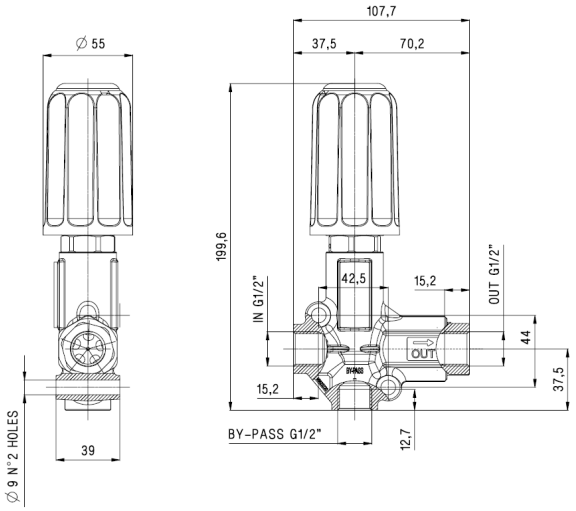

- Automatically relieves pressure from pump at shut-off
- Easy maintenance. The pressure regulating unit is fully removable from above
- Suitable for wall mounting by 2 screws
- Internal safety device/check valve to avoid overpressure
- NEW check valve design for enhanced flow quality

Suitable for **XWL - XWP - RGL - RGP - RTX - RTD** pumps series

MOD	COD	MAX		MAX				FITTINGS			KG NET
		l/min	gpm	bar	bar (permissible)	psi	psi (permissible)	IN	OUT	BY-PASS	kg
VR-A 100.300	**70201**	100	26.4	300	330	4351	4786	G 1/2" (F)	G 1/2" (F)	G 1/2" (F)	1.2