GENERAL PUMP *A member of the Interpump Group*

VBC Series

Turbine peripheral, cast iron centrifugal water pumps

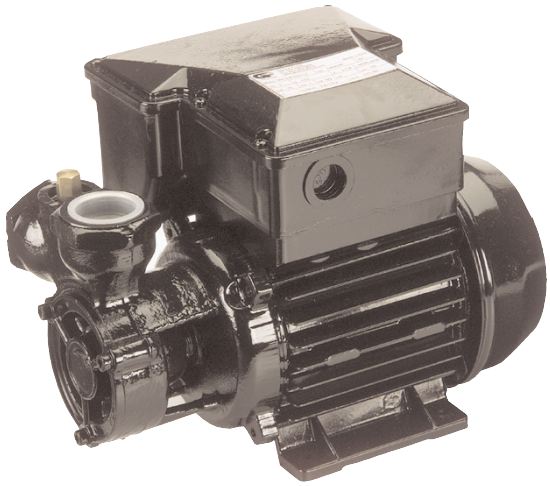

FEATURES

- Heavy duty cast-iron construction
- Balanced brass impeller
- Efficient graphite and ceramic mechanical seal
- Buna-N elastomers for exceptional compatibilty
- Large NPT-F ports
- Priming port

SPECIFICATIONS

Part Number	Inlet	Outlet	Impeller	Horse Power	RPM	Volts	Max psi	Max Temp °F(°C)	Mechanical Seal	Impeller Material	Body Material
VBC1100511	1"	1"	2-1/4"	.50 HP	3450	110	125	158(70)	Graphite/Ceramic	Brass	Cast Iron
VBC1100711	1"	1"	2-15/16"	.75 HP	3450	110	125	158(70)	Graphite/Ceramic	Brass	Cast Iron
VBC1101011	1"	1"	2-11/16"	1.0 HP	3450	110	125	158(70)	Graphite/Ceramic	Brass	Cast Iron
VBC1101511	1"	1"	2-15/16"	1.5 HP	3450	110	125	158(70)	Graphite/Ceramic	Brass	Cast Iron
VBC1102031	1"	1"	3"	2.0 HP	3450	230	125	158(70)	Graphite/Ceramic	Brass	Cast Iron

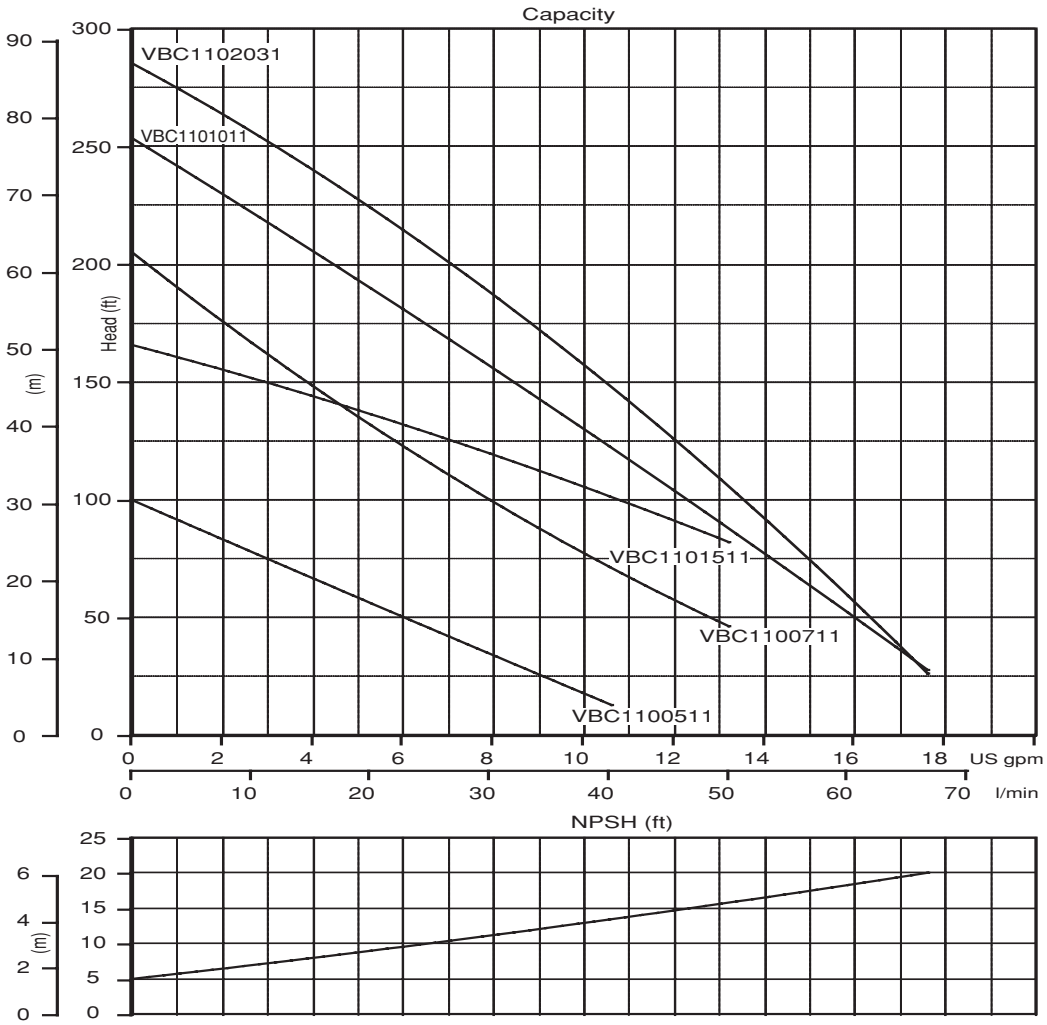

GP CENTRIFUGALS

GENERAL PUMP

VBC Series

GENERAL PUMP *A member of the Interpump Group*

Turbine peripheral, cast iron centrifugal water pumps

PARTS LIST

Item	Part No.	Description	Qty
5.	W51200025	Pump Body, Cast Iron, .5 hp	1
	W51200051	Pump Body, Cast Iron, .75 & 1.0 hp	
	W51200061	Pump Body, Cast Iron, 1.5 & 2.0 hp	
8.	W81000040	Drain Plug, Brass	1
12.	W51400004	Impeller, Brass, .5 hp	1
	W51400153	Impeller, Brass, .75 hp	
	W51400203	Impeller, Brass, 1.0 hp	
	W51400251	Impeller, Brass, 1.5 hp	
	W51400300	Impeller, Brass, 2.0 hp	
13.	W54250060	Rotating Mech Seal, .5, .75 & 1.0hp	1
	W54250180	Rotating Mech Seal	
14.	W54730300	O-Ring, .5 hp	1
	W54730132	O-Ring, .75 & 1.0 hp	
	W54730370	O-Ring	
15.	W54200060	Fixed Mech Seal, .5, .75 & 1.0hp	1
	W54200112	Fixed Mechanical Seal	
17.	W54300040	Deflector, .5, .75 & 1.0 hp	1
	W54300080	Deflector	
18.	W53200010	Flange, Cast Iron, .5 hp	1
	W53200011	Flange, Cast Iron, .75 & 1.0 hp	
	W53200015	Flange, Cast Iron	
19.	W57021041	Screw, .5 hp	4
	W57001050	Screw, .75 & 1.0 hp	
	W57001565	Screw	
20.	W53400080	Bearing, .5 hp	2
	W53400100	Bearing, .75 hp	
	W53400102	Bearing, 1.0 hp	
	W53400140	Bearing, 1.5 & 2.0 hp	
21.	W57800401	Key, 304 SS	1
22.	W50100462	Pump & Motor Shaft, .5 hp	1
	W50100952	Pump & Motor Shaft, .75 hp	
	W50100962	Pump & Motor Shaft, 1.0 hp	
	W50101120	Pump & Motor Shaft, 1.5 hp	
	W50101250	Pump & Motor Shaft, 2.0 hp	
24.	W56800040	Circlip, .5 hp	1
	W56800060	Circlip, .75 & 1.0 hp	
	W56800080	Circlip, 1.5 & 2.0 hp	
25.	W50010558	Motor Casing w/ Stator, .5 hp	1
	W50010959	Motor Casing w/ Stator, .75 hp	
	W50011012	Motor Casing w/ Stator, 1.0 hp	
	W50011745	Motor Casing w/ Stator, 1.5 hp	
	W50011744	Motor Casing w/ Stator, 2.0 hp	

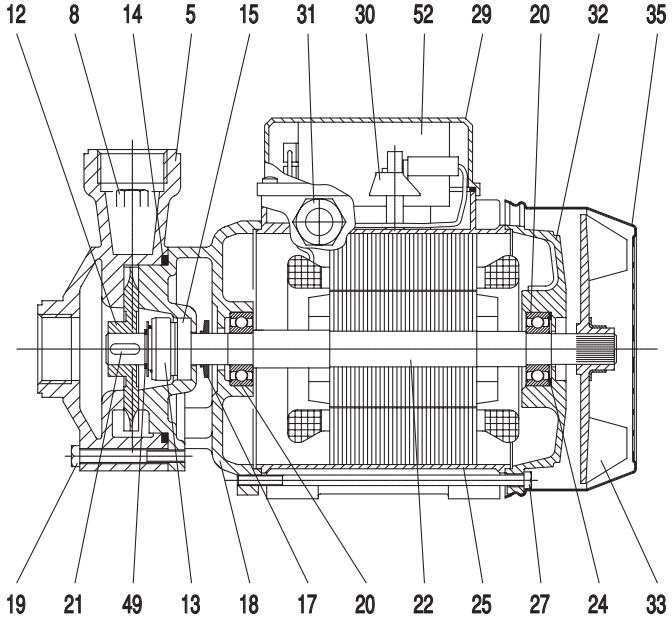

Item	Part No.	Description	Qty
27.	W57100150	Tie-Rod, .5 hp	4
	W57100321	Tie-Rod, .75 & 1.0 hp	
	W57100351	Tie-Rod, 1.5 & 2.0 hp	
28.	W57060510	Screw	4
29.	W55120050	Terminal Board Cover	1
	W55130030	Terminal Board Cover, 1.5 & 2.0 hp	
30.	W55100305	Terminal Board	1
31.	W55170200	Strain Relief	1
	W55170202	Strain Relief, 1.5 & 2.0 hp	
32.	W53220022	Rear Motor Cover, .5 hp	1
	W53220040	Rear Motor Cover, .75 & 1.0 hp	
	W53220060	Rear Motor Cover, 1.5 & 2.0 hp	

Item	Part No.	Description	Qty
33.	W55000040	Motor Fan, Plastic, .5 hp	1
	W55000060	Motor Fan, Plastic, .75 & 1.0 hp	
	W55000080	Motor Fan, Plastic, 1.5 & 2.0 hp	
35.	W55120050	Fan Cover, .5 hp	1
	W55050065	Fan Cover, .75 & 1.0 hp	
	W55050080	Fan Cover, 1.5 & 2.0 hp	
49.	W57700631	Snap Ring, 304 SS, .5 & .75 hp	1
	W57700651	Snap Ring, 304 SS	
52.	W55500242	Capacitor, .5 hp	1
	W55500343	Capacitor, .75 hp	
	W55500384	Capacitor, 1.0 hp	
	W55500440	Capacitor, 1.5 hp	
	W55500343	Capacitor, 2.0 hp	

DIMENSIONS

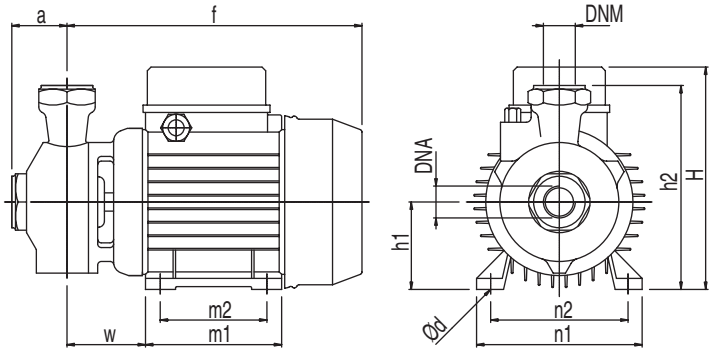

in (mm)	DNA	DNM	f	a	m1	m2	n1	n2	H	h1	h2	w	Ød	lb(kg)
VBC1100511	1	1	8.5 (215)	1.4 (35)	3.9 (100)	3.1 (80)	4.7 (120)	3.9 (100)	6.5 (166)	2.5 (63)	5.6 (143)	2.4 (60)	0.3 (7)	11.5 (5)
VBC1100711	1	1	9.5 (241)	1.8 (45)	4.4 (112)	3.5 (90)	5.3 (135)	4.4 (112)	7.1 (180)	2.8 (71)	6.3 (161)	2.5 (65)	0.3 (7)	18.1 (8)
VBC1101011	1	1	9.5 (241)	1.8 (45)	4.4 (112)	3.5 (90)	5.3 (135)	4.4 (112)	7.1 (180)	2.8 (71)	6.3 (161)	2.5 (65)	0.3 (7)	20.5 (9)
VBC1101511	1	1	10.8 (274)	1.8 (45)	4.9 (124)	3.9 (100)	6.0 (152)	4.9 (125)	7.9 (200)	3.1 (80)	6.9 (175)	2.7 (69)	0.4 (9)	32.0 (15)
VBC1102031	1	1	10.8 (274)	1.8 (45)	4.9 (124)	3.9 (100)	6.0 (152)	4.9 (125)	7.9 (200)	3.1 (80)	6.9 (175)	2.7 (69)	0.4 (9)	34.2 (16)

GENERAL PUMP 1174 NORTHLAND DRIVE • MENDOTA HEIGHTS, MN 55120
PHONE: (651)454-6500 • FAX: (651)454-4524 • e-mail: sales@gpcompanies.com • www.generalpump.com

300356 Rev. C
6-03

GENERAL PUMP