microlene

Installation and Operating Instructions

Microlene Steriflo Ultra Violet Water Treatment System

UV130 and UV250



Please pass these instructions on to the operator of this equipment.

microlene

Steriflo Ultra Violet Water Treatment System

Maximum operating pressure for stainless steel UV chambers is 850kPa (125 psi). If this pressure can be exceeded or if operating close to this pressure if a suitable pressure limiting valve in the supply to the UV chamber.

Plastic UV chambers have a maximum operating pressure of 400kPa (60 psi).

WARNING: The UV Chamber operates under pressure. Under no circumstances should the UV Chamber be disassembled unless the internal pressure of the unit has been relieved. Failure to observe this warning will expose persons to the possibility of personal injury and may result in damage to the UV system or other property.



DO NOT LOOK AT UV LAMP WHILE LAMP IS OPERATING Ultra violet radiation is harmful to skin & eyes.

This unit is designed to treat water at ambient temperatures (5˚C to 45˚C). Contact your dealer for details of UV systems suitable for hot water service.

DO NOT DISASSEMBLE ANY COMPONENTS UNTIL YOU HAVE FULLY READ THESE INSTRUCTIONS!

Contents

Preparing your system 5
Choosing a Site 5
Housing your Steriflo System 5
Power Connection 6
Electrical Power Surge Protection 8
Pipe Connections 8
Pre-treatment (drinking water) 9
Lamp Installation 9
Operation 10
Maintenance 10
Water Quality 12
Lamp Alarm System 12
Trouble Shooting 13
Part Numbers 14
After Sales Service 14
WARNINGS 15
Davey Repair or Replacement Guarantee 16

Congratulations on your purchase of a high quality, Australian made Steriflo Ultra Violet water treatment system. All components have been designed and manufactured to give trouble free, reliable operation.

Your new Microlene Steriflo system incorporates a lamp failure system design feature that enables you to be warned of a lamp failure by :-

1. A lamp failure LED
2. An audible alarm
3. Remote alarm contacts

In addition when the alarm “beeps” on and off, the lamp is due to be changed so that effective treatment is maintained.

Before installing your new Microlene Steriflo, please read all instructions carefully as failures caused by incorrect installation or operation are not covered by the guarantee. Your Ultra Violet water treatment system is designed to handle clean water. The system should not be used for any other purpose without specific referral to CCL. The use of the system with flammable, corrosive and other materials of a hazardous nature is specifically excluded.

The appliance is not intended for use by young children or infirm persons without supervision. Young children should be supervised to ensure they do not play with the appliance.

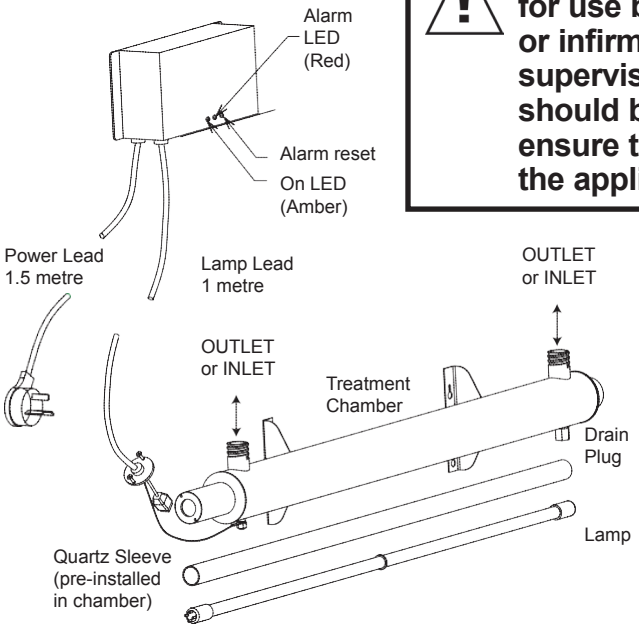

NOTE: The quartz sleeve has been factory fitted, and there is no need to remove these endcaps on first installation. Before removing endcaps, please read the Maintenance section of these instructions completely.

Preparing your system

On removing your Microlene Steriflo system from its carton you should check all components, especially the lamp, to ensure all are present and have not been damaged in transportation. You should have:

1. Power supply control box with indicator light(s) and electrical flex
2. UV lamp (or lamps)
3. Treatment chamber with mounting brackets

Choosing a Site

Choose a site with a firm mounting position. Allow room for removal of the lamp and sleeve during servicing. Leave a chamber lengths space at the lamp connector end for lamp removal, with 100mm free at the other end for access to the end nut. The ‘open’ end nut and the blank end nut are interchangeable, so lamp removal can be from either end.

Housing your Microlene Steriflo System

To protect your Microlene Steriflo system from the weather, make sure the site is water proof, frost free and has adequate ventilation. The unit should be either horizontally mounted with the inlet/outlet facing upwards or vertically mounted with the inlet/outlet at the bottom. Allow for drainage, to avoid damage to flooring etc., that over time may occur from leaking pipe joints or seals and allow room to remove the lamp.



WARNING: Some insects, such as small ants, find electrical devices attractive for various reasons. If your site or enclosure is susceptible to insect infestation you should implement a suitable pest control plan.

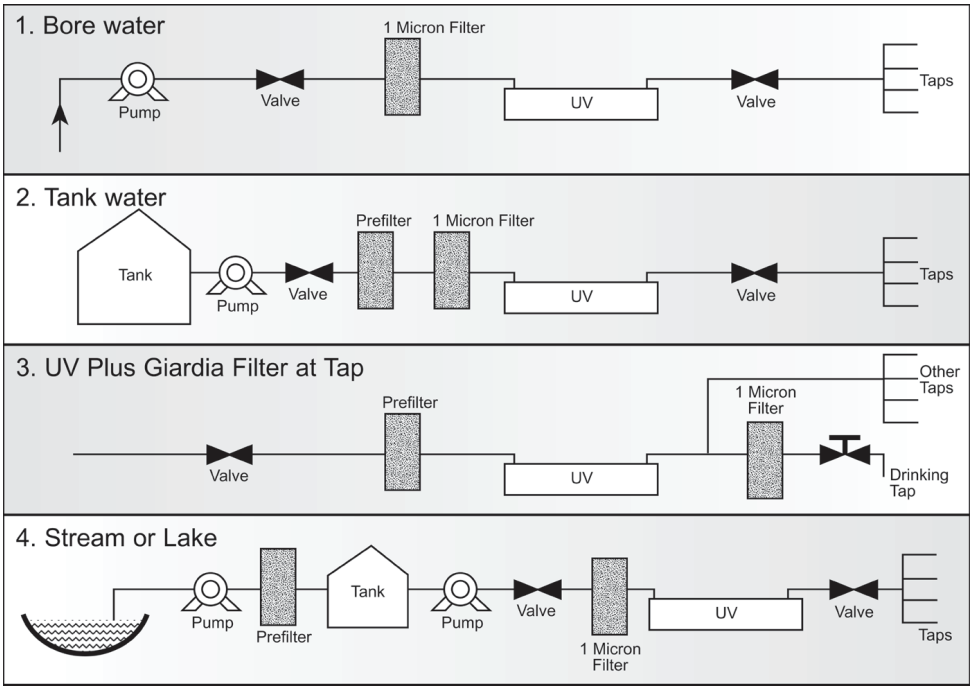

Power Connection

WARNING: When servicing or attending your Microlene Steriflo, always ensure power is switched off and lead unplugged. Electrical connections should be serviced only by qualified persons. If the electrical supply lead of this system is damaged, it must only be replaced by a qualified service personnel.

Connect lead to power supply designated on control box label. Earth stainless steel chambers using bolt provided on the chamber (see illustration below).

Install the power supply enclosure above the treatment chamber so that in the event of a leak, water cannot drip down the lamp lead into the enclosure.

CAUTION: The supply cord is necessary for lamp changing. The three pin supply plug must remain accessible after installation. If installed to fixed wiring without the plug a two pole switch must be fitted and its ON and OFF positions shall be marked.

The Microlene Steriflo control box has a red LED alarm indicator light mounted on its front panel, adjacent to the amber "power on" LED. This light will be illuminated whenever the Microlene Steriflo control box senses no lamp current. There is also an audible alarm in the event of lamp failure. The LED and/or alarm will only work when unit is connected to the correct electrical supply.

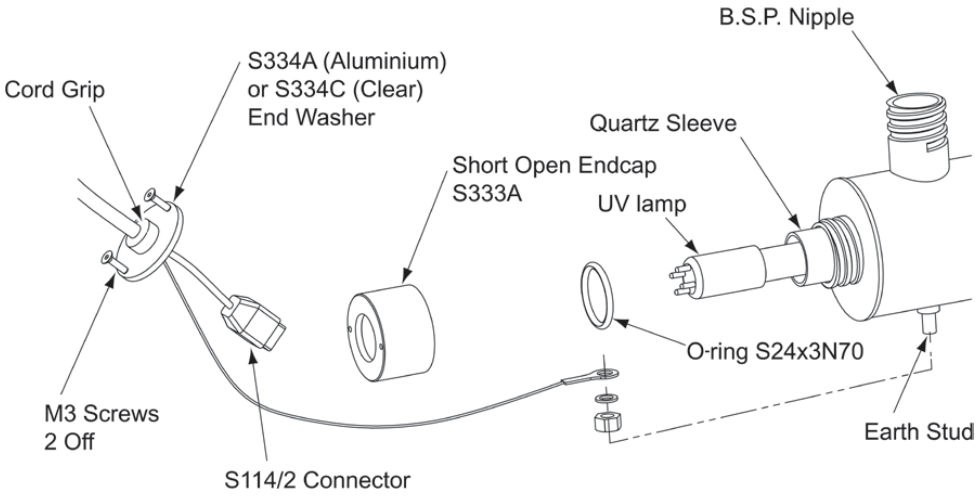

Electrical Power Surge Protection

An electrical power surge or spike can travel on the supply lines and cause serious damage to your electrical equipment. The Microlene Steriflo control box has a 2 Amp fuse

to protect the circuit. The fuse is not a lightning arrestor and may not protect the Microlene Steriflo if lightning or a very powerful surge hits the unit.

If the installation is subject to electrical power surges or lightning we strongly recommend the use of suitable additional surge protection devices on ALL electrical equipment.

We recommend the use of an RCD or earth leakage circuit breaker on the power supply to your unit.



DO NOT LOOK AT UV LAMP WHILE LAMP IS OPERATING Ultra violet radiation is harmful to skin & eyes.

DO NOT DISASSEMBLE ANY COMPONENTS UNTIL YOU HAVE FULLY READ THESE INSTRUCTIONS!

Pipe Connections

NOTE: Prior to installation remove the transport plugs from the inlet, outlet and lamp end cap.

Never use PVC pipe directly connected to unit. PVC pipe and fittings can be used after 90o bends of a suitable material are connected to the inlet and outlet of the chamber. Larger diameter pipe may be used to minimise resistance to flow, but maximum flow rates should not be exceeded, as correct water treatment cannot be assured at higher flows. If flows may exceed the design maximum, install a flow restriction device.

Do not use pipe thread sealing compounds (especially hemp) on any part of this unit. ONLY use Teflon sealing tape.

Use unions at pipe connections to enable easy removal and servicing. Use sufficient tape to ensure airtight seal and do not over tighten. To prevent strain on unit threads always support heavy inlet and outlet pipes.

Pre-treatment (drinking water)

Pre-filtration is usually required to ensure that particulate matter does not shield micro-organisms from the UV light. Sand filtration or 20 micron cartridge filtration is the usual minimum. In some cases, particularly with surface water, finer filtration may be necessary, or if cysts like Giardia or Cryptosporidium may be present.

In this case 1 micron filtration is required, not necessarily for the whole supply, filtration for the drinking tap only may be practical.

Lamp Installation

Once the Microlene Steriflo Treatment Chamber has been connected to the pipework, the installation should be checked for water leaks.

Attach the “DO NOT LOOK AT LAMP” sticker in an obvious position on the treatment chamber, check that the chamber is clean to ensure the sticker will adhere correctly.

The Quartz Sleeve is pre-installed in the treatment chamber, and provided the endcaps have not been disturbed or undone, is able to withstand well in excess of the maximum operating pressures.

If the chamber test is successful, it is now time to insert the lamp. DO NOT INSERT THREE PIN POWER PLUG TO POWER OUTLET YET!

Expose the connection end of the lamp from its transport tube and protective wrapping. The lamp connection socket is “keyed” to ensure correct alignment. Carefully remove the tube fully from its transport tube, touching the lamp as little as possible. Handle the lamp by the ends where possible. Wipe with clean cloth and methylated spirits if fingerprints or dirt need removing.

Slide the lamp into the chamber, fit lamp connection socket and then fasten the end washer into the endcap, with the screws provided.

Operation

Once all leak testing and lamp fitment has been completed, open valves and allow water to fill the chamber. Connect three pin plug to outlet and switch on. The “Mains On” Amber LED will be illuminated and the red alarm light will flash slowly.

Allow two minutes for the UV lamp to reach full intensity before starting water flow. Full lamp performance for a new installation will be achieved in 24 hours. On a new installation where no other form of sterilisation has been in constant usage, we recommend flushing the pipework with a suitable sanitiser such as Steritank HP (only available in New Zealand) or Acquasafe at 100mg/L. This solution should be left in the piping for at least an hour and preferably overnight.

The Steritank HP or Acquasafe solution can be dosed to the water tank or if necessary added as a shot dose to the bowl of any filter housing installed with the UV system and slowly flushed into the piping.

If dosed to the water tank the Steritank HP or Acquasafe will be left in the water as it is tasteless and suitable for use in drinking water. If added as a shot dose it should be rinsed out through a nearby tap.

Davey Water Products Limited cannot accept responsibility for loss or damage resulting from incorrect or unauthorised installations.

Maintenance

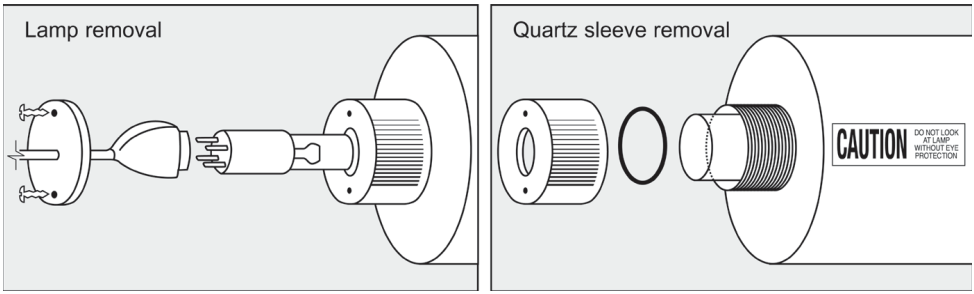

Lamp changing (every year of operation):

1. Shut valve(s) so that water cannot flow through steriliser
2. Switch off steriliser by unplugging mains
3. Undo end cover screws
4. Unplug lamp connector
5. Remove lamp

Reverse procedure when replacing lamp, ensuring that lamp is centrally located in the chamber. Handle only by the ends.

Quartz Sleeve Cleaning (three monthly):

If dirt is allowed to build up on the quartz sleeve it will impair the UV output. The quartz sleeve should be removed after one month and inspected for deposits.

Clean with methylated spirits (5% hydrochloric acid if heavily fouled) and carefully dry. Handle the sleeve with tissue to keep it clean. The sleeve should be cleaned every three months or as required.

Sleeve removal (use care-fragile):



CAUTION: Handling lamp and quartz sleeve. Keep the quartz components free of finger marks to avoid loss of output through dirt or grease shadows - handle the lamps by their ends where possible. Wipe lamp and sleeve with clean cloth or tissue if needed. The orings should be replaced annually or if damaged - do not grease the orings.

1. Remove lamp as described
2. Remove drain port cap and empty water from chamber
3. Undo nut at one end of the chamber and remove oring, repeat with nut at other end and remove oring, withdraw sleeve carefully
4. Inspect orings for damage, replace annually



NOTE: When withdrawing sleeve take care not to let the end drop into the chamber as it could break - a clean dowel inserted right through the sleeve to support it is useful.

Reverse procedure when replacing sleeve.

When replacing quartz sleeve after cleaning, the sleeve should stick out about 1cm at each end. Place oring over closed nut end and fit closed nut, fastening it hand tight. Hold the other end of the sleeve in position during the tightening with the other hand, then fit open end oring and cap.

A tiny amount of silicon spray or CRC in the end of aluminum endcap threads will aid easy tightening. Do not use excessive force when tightening nuts. Do not re-use quartz sleeve or orings if damaged.

Water Quality

Where the water being pumped contains unusually high levels of dissolved solids (hard water), iron, manganese or biological organisms, a deposit build up on the quartz sleeve may occur over time. This will compromise the effectiveness of the UV system and the sleeve should be cleaned as required to maintain it in a clean condition. Discoloured water will reduce the effectiveness of the UV system and filtration should be installed.

Lamp Alarm System

If the UV lamp is out due to a failure or bad connection the alarm buzzer will sound and the red LED will light and the alarm contacts will changeover. These are able to close a normally open solenoid valve. The alarm function can be checked by switching the unit off, disconnecting the lamp and then switching the unit back on.

The lamp should be replaced after a year's running time. The alarm will beep intermittently after the internal clock has measured this time as a reminder to change the lamp. Pressing the recessed 'reset' button with a ballpoint pen will silence it for 24 hours at a time to allow time for a new lamp to be obtained. Once a new lamp is installed press the reset button for 5 seconds to start another year's timing. Do this whenever a new lamp is installed. The alarm light flashes slowly during normal operation to show the timer circuit is running.

Trouble Shooting

Principle. a ballast (choke) provides the correct voltage and current for the lamp(s). The circuit board monitors the current to the lamp and if it is not present, illuminates the red alarm light and sounds the alarm buzzer (a “squealing” noise). An orange light indicates the power is on.

a) UV LAMP OUT, NO ORANGE “ON” LIGHT, NO ALARM

1. No mains voltage
2. Internal fuse failed
3. Check mains power connections inside power supply

b) UV LAMP FLICKERING, ALARM ON

1. Failed lamp
2. Incorrect lamp or ballast fitted

c) UV LAMP OUT, ALARM ON

1. Lamp failed
2. Poor connection to lamp (check/clean connector/lamp pins)
3. Ballast failed (unlikely)

d) LAMP ON, ALARM ON

1. Faulty circuit board

e) LAMP OUT, ALARM OFF

1. Loose connection or faulty circuit board, possibly short in lamp circuit



WARNING: When servicing or attending your Steriflo, always ensure power is switched off and lead unplugged. Electrical connections should be serviced only by qualified persons. If the electrical supply lead of this system is damaged, it must only be replaced by qualified personnel.

Care should also be taken when servicing or disassembling the unit and associated pipework to avoid possible injury from pressurised water. Unplug power, relieve pressure by opening a tap on the discharge side of the unit and allow any water in the unit to cool before attempting to dismantle.

Part Numbers

Model	Number of lamps GPH840N2/S	Number of sleeves QS880	Oring S24x3N70	Lamp connector S114/2
UV130	1	1	1	2
UV250	2	2	1	2

During service DO NOT use lubricants or sealants of any type on the orings. Keep the inside of the quartz sleeve dry and clean.

WARNING - Do not use hydrocarbon based or hydrocarbon propelled sprays around the electrical components of this unit.

After Sales Service

For professional after sales service or repair, contact your dealer.

For assistance in locating your nearest dealer, contact Davey Water Products Pty Ltd, customer service centre on 1300 232 839, by fax 1300 369 119 or by email sales@davey.com.au. In New Zealand on 0800 654 333, by fax on 0800 654 334 or by email to sales@daveynz.co.nz or visit davey.com.au.

WARNINGS



ULTRA-VIOLET RADIATION IS HARMFUL TO SKIN AND EYES.

EYES

Switch off UV system before removing covers. If working within line of sight of UV light, ensure that a suitable full face plastic facemask is worn.

SKIN

It is recommended that exposed skin is covered to prevent sunburn, possibly severe, if working within line of sight of operating UV system. Note: exposure to UV light results in symptoms that develop slowly, the exposure cannot be felt at the time.

SYMPTOMS

EYES: Mild exposure - irritation developing several hours later.

Severe exposure - sore, red eyes, sensitive to light, painful to keep eyes open.

SKIN: Mild exposure - slight reddening, tenderness, mild sunburn symptoms.

Severe exposure - skin sloughing (peeling), weeping area, sever sunburn symptoms.

FIRST AID

EYES: In mild cases, if in doubt seek medical attention.

Severe cases cover eyes with gauze or clean cloth, seek medical attention.

SKIN: In mild cases removal from exposure may be sufficient. If in doubt seek medical attention.

In severe cases, cover affected area loosely with a clean bandage or cloth. Seek medical attention. Do not apply fat, butter or oil to skin.

The above notes are intended to highlight the dangers of exposure to UV radiation. With sensible precautions any hazard can be eliminated. Germicidal UV cannot pass through clothing or other opaque materials or clear materials such as plastics or even window glass.

Davey Repair or Replacement Guarantee

In the unlikely event in Australia or New Zealand that this Davey product develops any malfunction within one year of the date of original purchase due to faulty materials or manufacture, Davey will at our option repair or replace it for you free of charge, subject to the conditions below.

Should you experience any difficulties with your Davey product, we suggest in the first instance that you contact the Davey Dealer from which you purchased the Davey product. Alternatively you can phone our Customer Service line on 1300 232 839 in Australia, or 0800 654 333 in New Zealand, or send a written letter to Davey at the address listed below. On receipt of your claim, Davey will seek to resolve your difficulties or, if the product is faulty or defective, advise you on how to have your Davey product repaired, obtain a replacement or a refund.

Your Davey One Year Guarantee naturally does not cover normal wear or tear, replacement of product consumables (i.e. mechanical seals, bearings or capacitors), loss or damage resulting from misuse or negligent handling, improper use for which the product was not designed or advertised, failure to properly follow the provided installation and operating instructions, failure to carry out maintenance, corrosive or abrasive water or other liquid, lightning or high voltage spikes, or unauthorized persons attempting repairs. Where applicable, your Davey product must only be connected to the voltage shown on the nameplate.

Your Davey One Year Guarantee does not cover freight or any other costs incurred in making a claim. Please retain your receipt as proof of purchase; you MUST provide evidence of the date of original purchase when claiming under the Davey One Year Guarantee.

Davey shall not be liable for any loss of profits or any consequential, indirect or special loss, damage or injury of any kind whatsoever arising directly or indirectly from Davey products. This limitation does not apply to any liability of Davey for failure to comply with a consumer guarantee applicable to your Davey product under the Australian or New Zealand legislation and does not affect any rights or remedies that may be available to you under the Australian or New Zealand Consumer Legislation.

In Australia, you are entitled to a replacement or refund for a major failure and for compensation for any other reasonably foreseeable loss or damage. You are also entitled to have the goods repaired or replaced if the goods fail to be of acceptable quality and the failure does not amount to a major failure.

Should your Davey product require repair or service after the guarantee period; contact your nearest Davey Dealer or phone the Davey Support Centre on the number listed below.

For a complete list of Davey Dealers visit our website (davey.com.au) or call:

DAVEY

Davey Water Products Pty Ltd
Member of the GUD Group
ABN 18 066 327 517

AUSTRALIA

Customer Service Centre
6 Lakeview Drive,
Scoresby, Australia 3179
Ph: 1300 232 839
Fax: 1300 369 119
Email: sales@davey.com.au
Website: davey.com.au

NEW ZEALAND

Customer Service Centre
7 Rockridge Avenue,
Penrose, Auckland 1061
Ph: 0800 654 333
Fax: 0800 654 334
Email: sales@dwp.co.nz
Website: daveynz.co.nz

® Davey is a registered trademark of Davey Water Products Pty Ltd. © Davey Water Products Pty Ltd 2018.

* Installation and operating instructions are included with the product when purchased new. They may also be found at davey.com.au