**GENERAL PUMP** *A member of the Interpump Group*

# TV Series

## Vertical Triplex Pumps

## FEATURES

- Extended-life design for light commercial duty use
- Heavy duty die-cast aluminum housing
- Integrated flow sensing unloader
- Integrated mounting manifold for efficient power transmission and heat dissipation
- Triplex plunger design for smooth operation
- Fixed chemical injector
- Forged brass or aluminum manifold

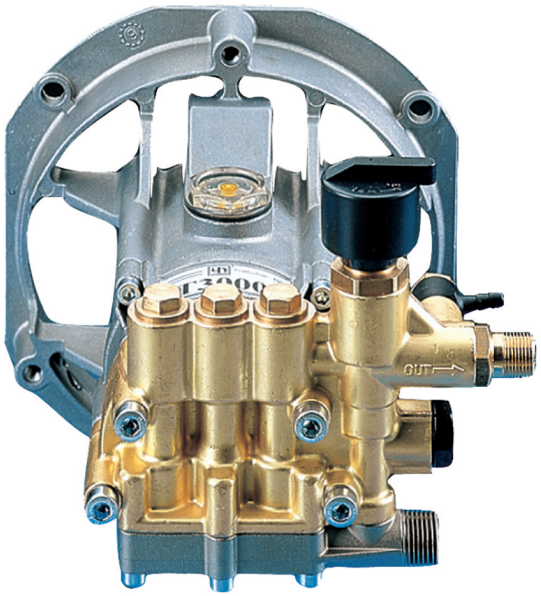

## SPECIFICATIONS

| Pump Model | TV2020G | TV2016G* | TV2520G | TV2516G* | TV3020G | TV3016G* | TV3520G | TV3516G* |
|---|---|---|---|---|---|---|---|---|
| Maximum Volume | 2.0 GPM | | 2.5 GPM | | 3.0 GPM | | 3.5 GPM | |
| Maximum Discharge Pressure | 2000 PSI | 1600 PSI | 2000 PSI | 1600 PSI | 2000 PSI | 1600 PSI | 2000 PSI | 1600 PSI |
| Maximum Pump Speed | 3600 RPM | | | | | | | |
| Inlet Pressure | 0–100 PSI | | | | | | | |
| Bore | .591 in. / 15 mm | | | | | | | |
| Stroke | .191 in. / 4.86 mm | | .218 in. / 5.53 mm | | .254 in. / 6.46 mm | | .307 in. / 7.8 mm | |
| Crankcase Oil Capacity | 6.75 oz. | | | | | | | |
| Maximum Fluid Temperature | 140°F | | | | | | | |
| Inlet Port Thread | 1/2"-14 BSPP-M | | | | | | | |
| Discharge Port Thread | 3/8"-19 BSPP-M | | | | | | | |
| Shaft Diameter | 7/8" | | | | | | | |
| Weight | 9.25 lbs. | | | | | | | |
| Dimensions | 8.35" x 8.27" x 7.22" | | | | | | | |

**Aluminum manifold*

## DIMENSIONAL DRAWING

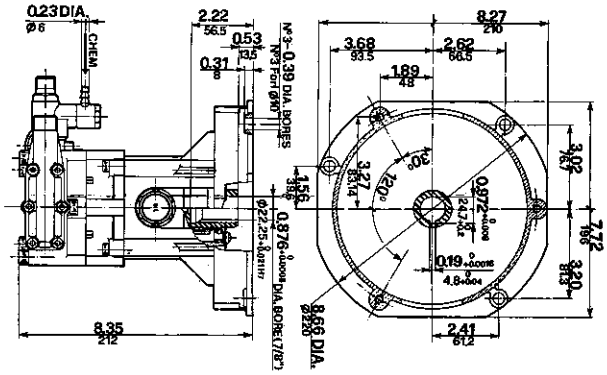


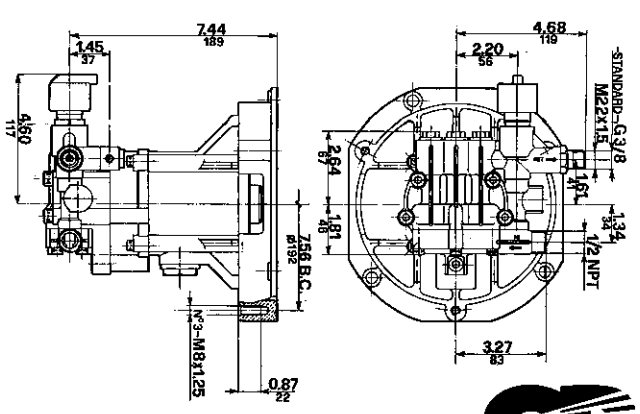

# TV Series – Vertical

**GENERAL PUMP** *A member of the Interpump Group*

## PARTS LIST

| Pos. | Code | Description | Kit | Qty. |
|---|---|---|---|---|
| 1. | 50.1500.74 | Crankcase Cover | | 1 |
| *2. | 90.1674.00 | Oil Seal, 1.378 ID x 2.44 OD x .393 | | 1 |
| 3. | 90.0695.00 | Snap Ring, Ø1.378 | | 1 |
| 4. | 57.0100.22 | Crankcase | | 1 |
| 5. | 57.0200.55 | Crankshaft, 7/8" | | 1 |
| 6. | 91.8455.00 | Needle Bearing | | 1 |
| 7. | 91.8347.00 | Thrust Bearing | | 2 |
| 8. | 57.2111.22 | Cam Plate (TV3016G) | | 1 |
| | 57.2107.22 | Cam Plate (TV3516G) | | 1 |
| 9. | 99.3068.00 | Screw, M8 x 25 | | 1 |
| 10. | 54.0401.01 | Piston Assembly, 15mm | | 3 |
| 11. | 94.7660.00 | Spring, 2.205 x 1.30 | | 1 |
| 12. | 90.3917.00 | O-Ring, 3.487 ID x .104 | | 1 |
| 13. | 57.2104.22 | Piston Guide Body | | 1 |
| 14. | 90.1567.00 | Oil Seal, Plunger | 136 | 3 |
| 15. | 57.2100.70 | Plug, Ø10mm | | 1 |
| 16. | 90.3814.00 | O-Ring, .206 ID x .104 CS | | 1 |
| 17. | 90.3835.00 | O-Ring, .594 ID x .104 CS | 118, 119 | 6 |
| 18. | 90.3604.00 | O-Ring, .989 ID x .070 CS | 118, 119 | 3 |
| 19. | 51.0802.70 | Packing Retainer, Ø15mm | 118 | 3 |
| 20. | 90.5089.00 | Anti-Extrusion Ring | 118, 119 | 3 |
| 21. | 90.3600.00 | O-Ring, .865 ID x .070 CS | 118, 119 | 3 |
| 22. | 96.7360.00 | Washer, .977 x .650 x .040 | 118, 119 | 3 |
| 23. | 57.1201.22 | Manifold | | 1 |
| 24. | 90.3589.00 | O-Ring, .070 x .489 | 134 | 6 |
| 25. | 36.7116.01 | Valve Assembly | 134 | (6) |
| 26. | 90.3593.00 | O-Ring, .070 x .615 | 133 | 6 |
| 27. | 98.2135.00 | Valve Cap, M18 x 1.5 x 10 | 133 | 3 |
| 28. | 36.3247.70 | Control Piston | 190337 | 1 |
| 29. | 90.2585.00 | Seal | 190337 | 1 |
| 30. | 90.3578.00 | O-Ring, .302 ID x .070 CS | 190337 | 1 |
| 31. | 90.5033.00 | Anti-Extrusion Ring | 190337 | 1 |
| 32. | 36.3192.70 | Regulating Screw | 190337 | 1 |
| 33. | 90.3847.00 | O-Ring, .797 ID x .104 CS | 190337 | 1 |
| 34. | 36.3246.70 | Bushing Guide, M24 | 190337 | 1 |
| 35. | 90.3833.00 | O-Ring, .104 x .550 ID x .104 CS | 190337 | 3 |
| 36. | 36.3191.51 | Knob, Adjustment | | 1 |
| 37. | 94.8220.00 | Conical Spring, Ø.202/.328 x .472 LG | 190337 | 1 |
| 38. | 36.3195.51 | Spacer | 190337 | 1 |
| 39. | 36.3197.66 | Seat, Valve | 190337 | 1 |
| 40. | 90.3823.00 | O-Ring, .391 ID x .104 CS | 190337 | 3 |
| 41. | 36.3196.66 | Valve | 190337 | 1 |
| 42. | 99.3210.00 | Screw, M8 x 70 | | 4 |
| 43. | 99.3069.00 | Screw, M8 x 25 | | 1 |
| 44. | 10.0437.66 | 1.6 mm Orifice, TH2.0 GPM | | 1 |
| | 10.0307.66 | 1.8 mm Orifice, TH2.5 GPM | | 1 |
| | 10.0151.66 | 2.0 mm Orifice, TH3.0 GPM | | 1 |
| | 10.0076.66 | 2.2 mm Orifice, TH3.5 GPM | | 1 |
| 45. | 10.0078.70 | Nipple, 3/8" | | 1 |
| | 10.0147.70 | Nipple, M22 x 1.5 | | 0 |
| 46. | 98.2090.00 | Plug, 3/8" BSPP-M, Plastic, PTP Port | | 1 |
| 47. | 57.1400.22 | Inlet Manifold | | 1 |
| 48. | 99.1914.00 | Screw, M6 x 30 | | 10 |
| 49. | 98.2057.00 | Plug, M14 x 1.5 x 9mm | | 1 |
| 50. | 97.5968.00 | Oil Level Sight Glass, 3/4" BSPP | | 1 |
| 51. | 99.1542.00 | Screw, M5 x 12 | | 4 |
| 60. | 36.2563.70 | Injector Housing | | 1 |
| 61. | 90.3585.00 | O-Ring, .426 ID x .070 CS | | 1 |
| 62. | 36.2604.51 | Hose Barb | | 1 |
| 63. | 90.3572.00 | O-Ring, .208 ID x .070 CS | | 1 |
| 64. | 97.4782.00 | Ball, 7/32" | | 1 |
| 65. | 94.8217.00 | Spring, Conical, Ø.169/.287 x .433 LG | | 1 |
| 66. | 90.3582.00 | O-Ring, .365 ID x .070 CS | | 1 |

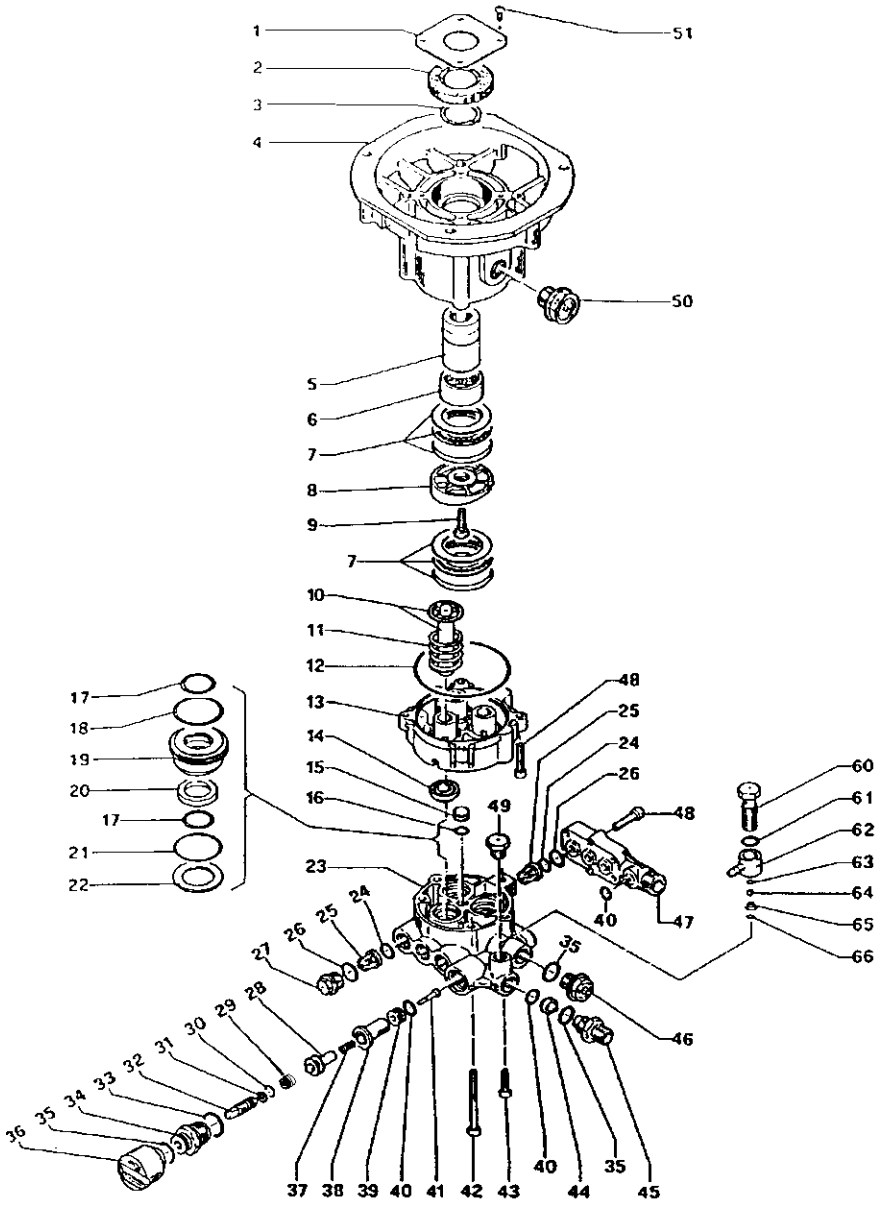


***Install Item No. 2 – "Oil Seal" – upside down to allow venting.***

## REPAIR KITS

| KIT NO. | 118 | 119 | 133 | 134 | 136 | 190337 |
|---|---|---|---|---|---|---|
| ITEM NO'S INCLUDED IN KIT | 17, 18, 20, 21, 22 | 17, 18, 19, 20, 21, 22 | 26, 27 | 24, 25 | 14 | 28, 29, 30, 31, 32, 33, 34, 35, 37, 38, 39, 40, 41 |
| NUMBER OF ASSEMBLIES IN KIT | 3 | 1 | 4 | 6 | 3 | 1 |

## TORQUE SPECS*

| Position | Ft.-lbs. |
|---|---|
| 9 | 36.8 |
| 27 | 22 |
| 34 | 3.7 |
| 41 | 0.74 |
| 42 | 15 |
| 43 | 14.7 |
| 45 | 29.4 |
| 46 | 5.1 |
| 48 | 7.4 |
| 49 | 14.7 |
| 51 | 7.4 |
| 60 | 14.7 |

*Decrease torque by 20% if threads are lubricated.

**GENERAL PUMP** 1174 NORTHLAND DRIVE • MENDOTA HEIGHTS, MN 55120
PHONE: (651)454-6500 • FAX: (651)454-4524 • E-mail: sales@generalpump.com • www.generalpump.com

300293 Rev. B
9-98