GENERAL PUMP *A member of the Interpump Group*

TH Series

Horizontal Triplex Pumps

FEATURES

- Extended-life design for light commercial duty use
- Heavy duty die-cast aluminum housing
- Integrated flow sensing unloader, to avoid the liability of having a pressurized hose after the engine is shut-off
- Integrated mounting manifold for efficient power transmission and heat dissipation
- Triplex plunger design for smooth operation
- Fixed chemical injector
- Forged brass manifold

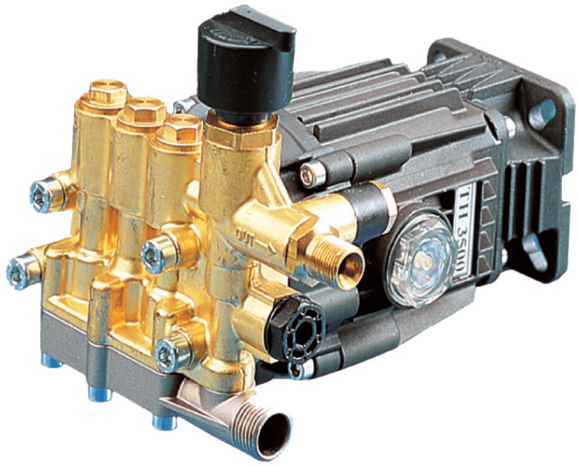

SPECIFICATIONS

Pump Model	TH2020G	TH2016G*	TH2520G	TH2516G*	TH3020G	TH3016G*	TH3520G	TH3516G*
Maximum Volume	2.0 GPM		2.5 GPM		3.0 GPM		3.5 GPM	
Maximum Discharge Pressure	2000 PSI	1600 PSI	2000 PSI	1600 PSI	2000 PSI	1600 PSI	2000 PSI	1600 PSI
Maximum Pump Speed	3600 RPM							
Inlet Pressure	0–100 PSI							
Bore	.591 in. / 15 mm							
Stroke	.191 in. / 4.86 mm		.218 in. / 5.53 mm		.254 in. / 6.46 mm		.307 in. / 7.8 mm	
Crankcase Oil Capacity	6.75 oz.							
Maximum Fluid Temperature	140°F							
Inlet Port Thread	1/2" NPT-M							
Discharge Port Thread	3/8"-19 BSPP-M							
Shaft Diameter	3/4"							
Weight	9.25 lbs.							
Dimensions	7.5" x 7.0" x 9.0"							

**Aluminum manifold*

DIMENSIONAL DRAWING

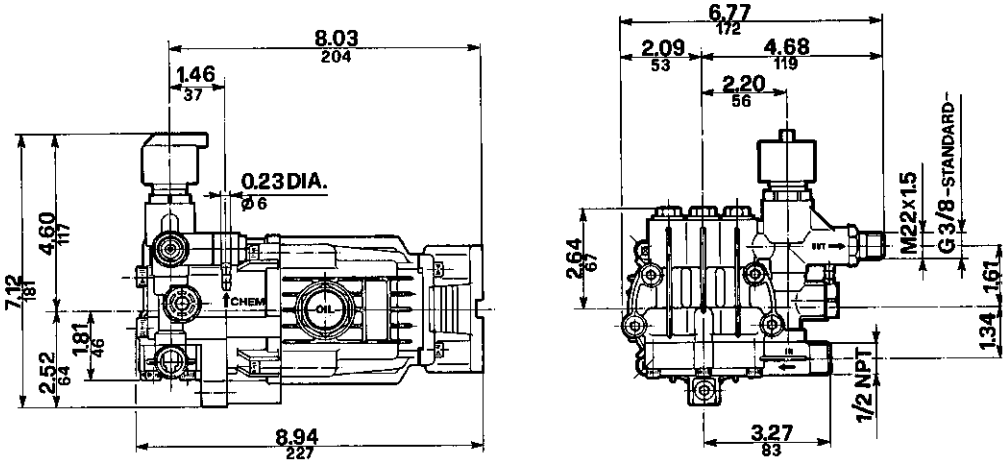

TH Series – Horizontal

GENERAL PUMP *A member of the Interpump Group*

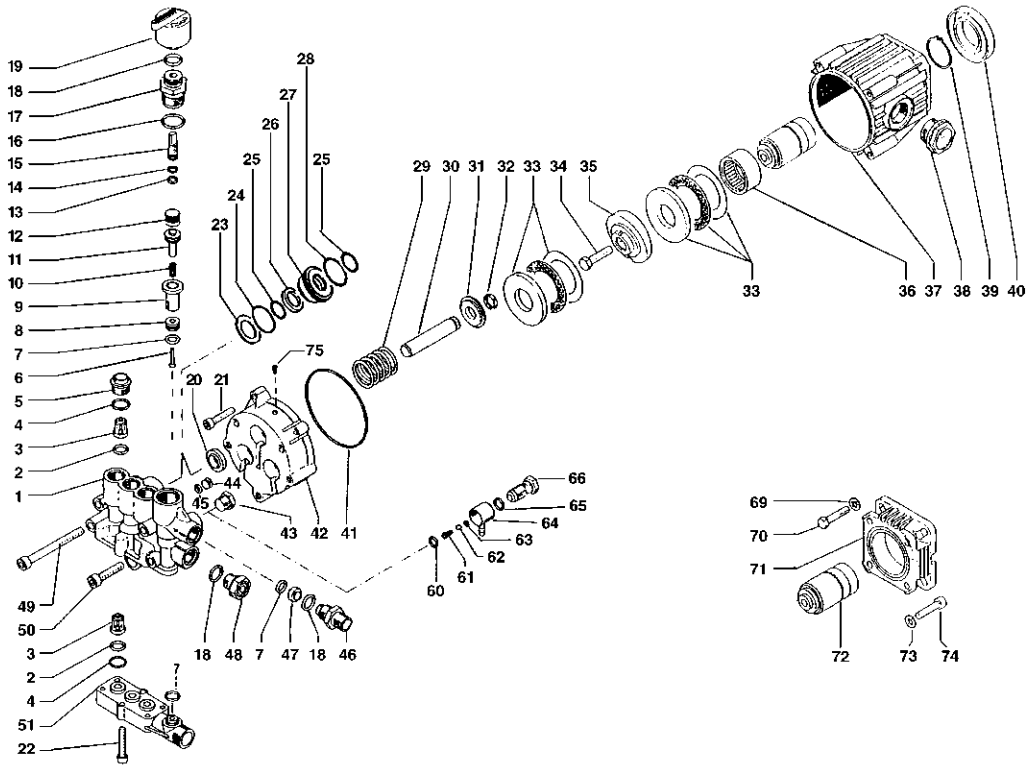

PARTS LIST

Pos.	Part Num.	Description	Kits	Qty.
1.	57120241	Manifold, Bronze TH 2000 PSI		1
	57120122	Manifold, Alum. TH 1600 PSI		1
2.	90358900	O-Ring, 12.42 x 1.78	134	6
3.	36711601	Valve Unit	134	6
4.	90359300	O-Ring, 5.60 x 1.78	133	6
5.	98213500	Valve Cap	133	3
6.	36319666	Unloader Valve Screw	190337	1
7.	90382300	O-Ring, 9.92 x 2.62	190337	3
8.	36319766	Valve Seat	190337	1
9.	36319551	Spacer	190337	1
10.	94822000	Spring	190337	1
11.	36324770	Unloader Piston	190337	1
12.	90258500	Seal	190337	1
13.	90357800	O-Ring, 7.66 x 1.78	190337	1
14.	90503300	Anti Extrusion Ring	190337	1
15.	36319270	Unloader Stem	190337	1
16.	90384700	O-Ring, 20.24 x 2.62	190337	1
17.	36324670	Guide	190337	1
18.	90383300	O-Ring, 13.95 x 2.62	190337	3
19.	36319151	Regulating Knob		1
20.	90156700	Oil Seal, 15x25,4x7	136	3
21.	99191400	Screw, M6 x 30		4
22.	99191200	Screw, M6 x 30, UN15931		6
23.	96736000	Head Ring	118,119	3
24.	90360000	O-Ring, 21.95 x 1.78	118-119	3
25.	90383500	O-Ring, 15.08 x 2.62	118-119	6
26.	90508900	Packing	118-119	3
27.	51080270	Retainer, 15 mm	119	3
28.	90360400	O-Ring, 25.12 x 1.78	118-119	3
29.	94766000	Spring, 33 x 56		3
30.	54040101	Plunger Assy., 15mm		3
31.	57210370	Spring Plate		3
32.	57208551	Spring Plate Retainer		3
33.	91834700	Roller Bearing		2
34.	99306800	Screw, M8 x 25		1
35.	57210722	Wobble Plate TH3500		1
	57211122	Wobble Plate TH3000		1
	57211222	Wobble Plate TH2500		1
	57211322	Wobble Plate TH2000		1
36.	91845500	Bearing Bushing		1
37.	57010622	Crankcase		1
38.	97596800	Sightglass		1
39.	90069500	Snap Ring		1
40.	90167400	OilSeal, 35 x 62 x 10		1
41.	90391700	O-Ring, 88.57 x 2.62		1
42.	57210522	Piston Guide Body w/Thread		1
43.	98205700	Plug, M14 x 1.5 x 9mm		1
44.	57210070	Plug, 10mm		1
45.	90381400	O-Ring, .206 ID x .104 CS		1
46.	10007870	Nipple, 3/8" M		1
	10014770	Nipple, M22 x 1.5		0
47.	10043766	1.6mm orifice TH2.0 GPM		1
	10030766	1.8mm orifice TH2.5 GPM		1
	10015166	2.0mm orifice TH3.0 GPM		1
	10007666	2.2mm orifice TH3.5 GPM		1
48.	98209000	Plug, 3/8" BSPP, Plastic, PTP Port		1
49.	99321000	Screw, M8 x 70		4
50.	99306900	Screw, M8 x 25		1
51.	57140022	Inlet Manifold		1
60.	90358200	O-Ring, .365 ID x .070 CS		1
61.	94821700	Spring, Conical .169/.287 x .433 LG		1
62.	97478200	Ball, 7/32"		1
63.	90357200	O-Ring, .208 ID x .070 CS		1
64.	36260451	Hose Barb		1
65.	90358500	O-Ring .426 ID x 070 CS		1
66.	36256370	Injector Housing		1
69.	96701400	Washer		4
70.	99273000	Screw		4
71.	10034622	Gas Mounting Flange, J609		1
72.	57020165	Crankshaft, TH Series, 3/4" Hollow		1
73.	96693800	Washer		4
74.	99186700	Screw		4
75.	57212070	Vent Plug		1

REPAIR KITS

KIT NO.	118	119	133	134	136	190337
ITEM NO.s INCLUDED IN KIT	23, 24, 25, 26, 28	23, 24, 25, 26, 27, 28	4, 5	2, 3	20	6, 7, 8, 9, 10, 11, 12, 13, 14, 15, 16, 17, 18
NUMBER OF ASSEMBLIES IN KIT	3	1	4	6	3	1

TORQUE SPECS*

Position	Ft.-lbs.
5	22
6	0.74
17	3.7
21	7.4
22	7.4
34	36.8
43	14.7
46	29.4
48	5.1
49	15
50	14.7
66	15

*Decrease torque by 20% if threads are lubricated.

GENERAL PUMP 1174 NORTHLAND DRIVE • MENDOTA HEIGHTS, MN 55120
PHONE: (651)454-6500 • FAX: (651)454-4524 • E-mail: sales@generalpump.com • www.generalpump.com

310009 Rev. B
8-98